OMRON

Environment-resistive Remote Terminal

NXR-series

IO-Link I/O Hub

User's Manual

NXR-ID166C-IL2
NXR-CD166C-IL2

IO-Link I/O Hub

W620-E1-05

NOTE

- All rights reserved. No part of this publication may be reproduced, stored in a retrieval system, or transmitted, in any form, or by any means, mechanical, electronic, photocopying, recording, or otherwise, without the prior written permission of OMRON.
- No patent liability is assumed with respect to the use of the information contained herein.
  Moreover, because OMRON is constantly striving to improve its high-quality products, the information contained in this manual is subject to change without notice.
- Every precaution has been taken in the preparation of this manual. Nevertheless, OMRON assumes no responsibility for errors or omissions.
  Neither is any liability assumed for damages resulting from the use of the information contained in this publication.

Trademarks

- Sysmac and SYSMAC are trademarks or registered trademarks of OMRON Corporation in Japan and other countries for OMRON factory automation products.
- Microsoft, Windows, Excel, Visual Basic, and Microsoft Edge are either registered trademarks or trademarks of Microsoft Corporation in the United States and other countries.
- EtherCAT® is a registered trademark and patented technology, licensed by Beckhoff Automation GmbH, Germany.
- Safety over EtherCAT® is a registered trademark and a patented technology, licensed by Beckhoff Automation GmbH, Germany.
- ODVA, CIP, CompoNet, DeviceNet, and EtherNet/IP are trademarks of ODVA.
- The SD and SDHC logos are trademarks of SD-3C, LLC.

Other company names and product names in this document are the trademarks or registered trademarks of their respective companies.

Copyrights

Microsoft product screen shots used with permission from Microsoft.

Introduction

Thank you for purchasing an NXR-series IO-Link I/O Hub.
This manual contains information that is necessary to use the NXR-series IO-Link I/O Hub. Please read this manual and make sure you understand the functionality and performance of the NXR-series IO-Link I/O Hub before you attempt to build an IO-Link System.
Keep this manual in a safe place where it will be available for reference during operation.

Intended Audience

This manual is intended for the following personnel, who must also have knowledge of electrical systems (an electrical engineer or the equivalent).

- Personnel in charge of introducing FA systems.
- Personnel in charge of designing FA systems.
- Personnel in charge of installing and maintaining FA systems.
- Personnel in charge of managing FA systems and facilities.

For programming, this manual is intended for personnel who understand the programming language specifications in international standard IEC 61131-3 or Japanese standard JIS B 3503.

Applicable Products

This manual covers the following products.

- NXR-series IO-Link I/O Hub
  NXR-ID166C-IL2
  NXR-CD166C-IL2

Manual Structure

Page Structure

The following page structure is used in this manual.

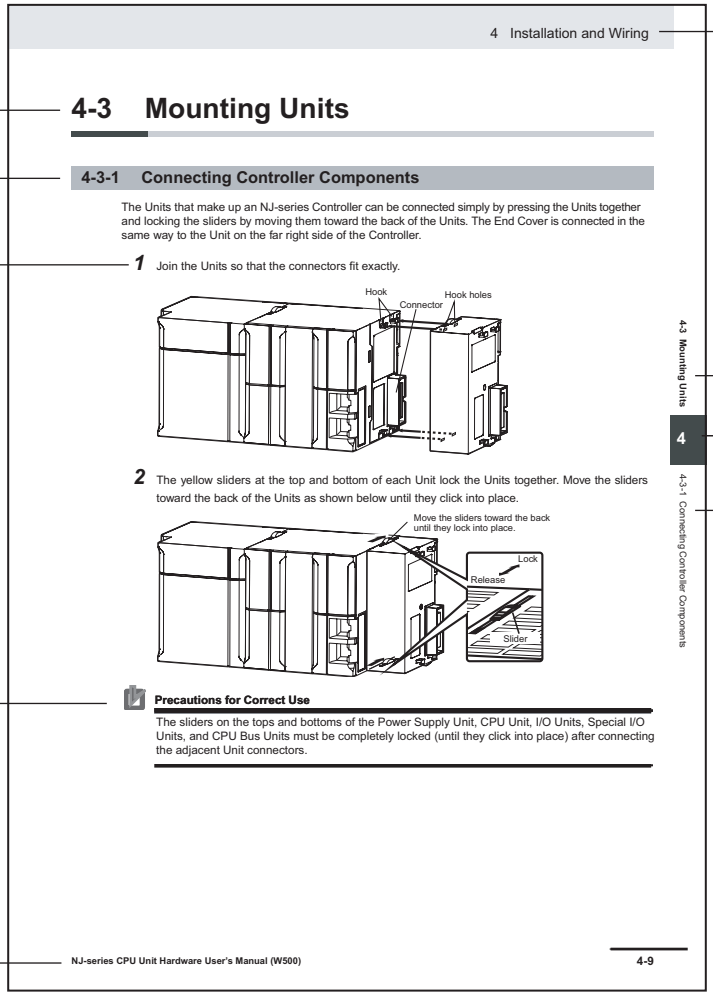

Level 1 heading

Level 2 heading

Level 3 heading

Gives the current headings.

Level 2 heading

Level 3 heading

A step in a procedure

Indicates a procedure.

Page tab

Gives the number of the main section.

Special information

Icons indicate precautions, additional information, or reference information.

Manual name

Note This illustration is provided only as a sample. It may not literally appear in this manual.

Special Information

Special information in this manual is classified as follows:

Precautions for Safe Use

Precautions on what to do and what not to do to ensure safe usage of the product.

Precautions for Correct Use

Precautions on what to do and what not to do to ensure proper operation and performance.

Additional Information

Additional information to read as required.
This information is provided to increase understanding or make operation easier.

Version Information

Information on differences in specifications and functionality for IO-Link Master Units and CX-ConfiguratorFDT with different unit versions is given.

Precaution on Terminology

- In this manual, "Store to device" refers to transferring data from the Support Software to a physical device and "Load from device" refers to transferring data from a physical device to the Support Software.
- In this manual, the directions in relation to the IO-Link I/O Hubs are given in the following figure, which shows upright installation.

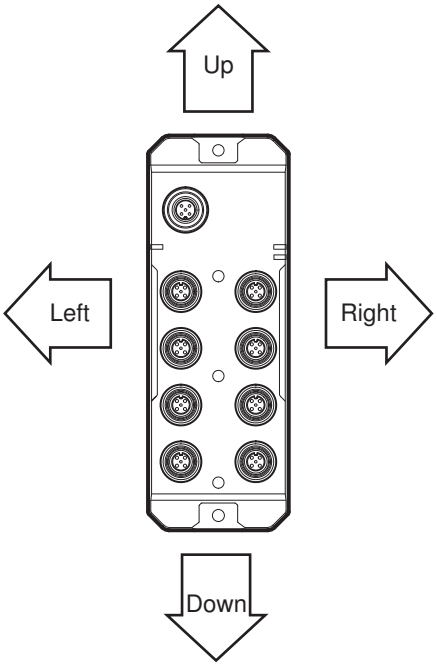

Sections in this Manual

1 Features and System Configuration

2 Specifications and Application Procedures

3 Part Names and Functions

4 Designing the Power Supply System

5 Installation and Wiring

6 Process Data and Service Data

7 Functions of IO-Link I/O Hubs

8 Troubleshooting

9 Inspection and Maintenance

A Appendices

I Index

CONTENTS

Introduction **1**
Intended Audience 1
Applicable Products 1

Manual Structure **2**
Page Structure 2
Special Information 3
Precaution on Terminology 3

Sections in this Manual **5**

Terms and Conditions Agreement **10**
Warranty, Limitations of Liability 10
Application Considerations 11
Disclaimers 11
Statement of security responsibilities for assumed use cases and against threats 12

Safety Precautions **13**
Definition of Precautionary Information 13
Symbols 13
Warnings 14

Precautions for Safe Use **15**

Precautions for Correct Use **18**

Regulations and Standards **19**
Conformance to EU Directives 19
Conformance to UL and CSA Standards 20
Conformance to Shipbuilding Standards 20
Conformance to KC Certification 20
Software Licenses and Copyrights 20

Unit Versions **21**
Unit Versions 21
Unit Versions and Support Software Versions 21

Related Manuals **22**

Terminology **23**

Revision History **24**

Section 1 Features and System Configuration

1-1 Types and Features of IO-Link I/O Hubs **1-2**
1-1-1 Types 1-3
1-1-2 Features 1-3

1-2 System Configuration **1-5**

1-3 List of Functions **1-7**

Section 2 Specifications and Application Procedures

2-1 Specifications **2-2**
2-1-1 General Specifications 2-2
2-1-2 Individual Specifications 2-2
2-2 Dimensions **2-7**
2-3 Application Procedures **2-8**

Section 3 Part Names and Functions

3-1 Parts and Names **3-2**
3-2 Indicators **3-4**
3-2-1 Status Indicators 3-4
3-2-2 I/O Indicators 3-5
3-3 Connectors **3-7**
3-3-1 IO-Link Connector 3-7
3-3-2 I/O Connectors 3-7

Section 4 Designing the Power Supply System

4-1 Power Supply Types and Power Supply System **4-2**
4-1-1 Power Supply Types and Applications 4-2
4-1-2 Power Supply System 4-2
4-2 Designing the Power Supply System **4-4**
4-2-1 Procedure for Designing the Power Supply System 4-4
4-2-2 Design Conditions for the Power Supply System 4-4
4-2-3 Calculating the Total Current Consumption 4-5
4-2-4 Calculating the Voltage Drop 4-7
4-3 Selecting the External Power Supply and Protective Devices **4-10**

Section 5 Installation and Wiring

5-1 Installing Hubs **5-2**
5-1-1 Installation Precautions 5-2
5-1-2 Installation Orientations 5-2
5-1-3 Installation Method 5-2
5-2 Wiring IO-Link Cable and I/O Cables **5-4**
5-2-1 Installation Precautions 5-4
5-2-2 Preparing for Wiring 5-4
5-2-3 Connecting IO-Link Cable 5-5
5-2-4 Connecting I/O Cables 5-7
5-2-5 Tightening Torque 5-10
5-2-6 Waterproof Covers 5-10
5-3 Wiring Example for I/O Connectors **5-11**
5-4 Connected Devices **5-16**
5-4-1 IO-Link Connector Cable 5-16
5-4-2 I/O Cables 5-16
5-4-3 Waterproof Cover for Connectors 5-17

Section 6 Process Data and Service Data

6-1 Process Data **6-2**

6-1-1 Digital Input Hub 6-2
6-1-2 Digital I/O Variable Hub 6-4

6-2 Service Data 6-9
6-2-1 Digital I/O Hub 6-9

Section 7 Functions of IO-Link I/O Hubs

7-1 Functions of Digital I/O Hubs 7-2
7-1-1 I/O Function 7-2
7-1-2 I/O Cable Disconnection Detection 7-3
7-1-3 I/O Cable Short-circuit Detection 7-6
7-1-4 All Hold Bits Reset 7-9
7-1-5 Voltage Drop Detection for Unit/Input Power Supply 7-10
7-1-6 Voltage Drop Detection for Output Power Supply 7-11
7-1-7 Digital Input Filter 7-12
7-1-8 Communications Error Output Setting 7-15
7-1-9 Monitoring Total Power-ON Time 7-16

Section 8 Troubleshooting

8-1 Error Notification Methods 8-2
8-1-1 Error Notification Method for EtherNet/IP 8-2
8-1-2 Error Notification Method for EtherCAT 8-3

8-2 Checking for Errors 8-4
8-2-1 Checking for EtherNet/IP Errors 8-4
8-2-2 Checking for EtherCAT Errors 8-5

8-3 Checking for Errors and Troubleshooting with the Indicators 8-6
8-3-1 Status Indicators 8-6
8-3-2 I/O Indicators 8-7

8-4 Checking for Errors and Troubleshooting with the Device Events 8-9
8-4-1 Device Events 8-9
8-4-2 Reading and Clearing Device Events 8-9
8-4-3 List of Device Events and Troubleshooting 8-11

8-5 Resetting Errors 8-12

Section 9 Inspection and Maintenance

9-1 Cleaning and Inspection 9-2
9-1-1 Cleaning 9-2
9-1-2 Inspection Procedure 9-2

9-2 Maintenance Procedure 9-4
9-2-1 Handling an IO-Link I/O Hub to Replace 9-4
9-2-2 Replacing an IO-Link I/O Hub 9-4

Appendices

A-1 Version Information A-2
A-2 Considerations for Connecting a Two-wire DC Sensor A-3
A-3 Wiring Precautions for External Output Signal Lines A-5
A-4 Configuration Tab Page A-6

Index

Terms and Conditions Agreement

Warranty, Limitations of Liability

Warranties

- **Exclusive Warranty**

  Omron's exclusive warranty is that the Products will be free from defects in materials and workmanship for a period of twelve months from the date of sale by Omron (or such other period expressed in writing by Omron). Omron disclaims all other warranties, express or implied.

- **Limitations**

  OMRON MAKES NO WARRANTY OR REPRESENTATION, EXPRESS OR IMPLIED, ABOUT NON-INFRINGEMENT, MERCHANTABILITY OR FITNESS FOR A PARTICULAR PURPOSE OF THE PRODUCTS. BUYER ACKNOWLEDGES THAT IT ALONE HAS DETERMINED THAT THE PRODUCTS WILL SUITABLY MEET THE REQUIREMENTS OF THEIR INTENDED USE.

  Omron further disclaims all warranties and responsibility of any type for claims or expenses based on infringement by the Products or otherwise of any intellectual property right.

- **Buyer Remedy**

  Omron's sole obligation hereunder shall be, at Omron's election, to (i) replace (in the form originally shipped with Buyer responsible for labor charges for removal or replacement thereof) the non-complying Product, (ii) repair the non-complying Product, or (iii) repay or credit Buyer an amount equal to the purchase price of the non-complying Product; provided that in no event shall Omron be responsible for warranty, repair, indemnity or any other claims or expenses regarding the Products unless Omron's analysis confirms that the Products were properly handled, stored, installed and maintained and not subject to contamination, abuse, misuse or inappropriate modification. Return of any Products by Buyer must be approved in writing by Omron before shipment. Omron Companies shall not be liable for the suitability or unsuitability or the results from the use of Products in combination with any electrical or electronic components, circuits, system assemblies or any other materials or substances or environments. Any advice, recommendations or information given orally or in writing, are not to be construed as an amendment or addition to the above warranty.

  See https://www.omron.com/global/ or contact your Omron representative for published information.

Limitation on Liability; Etc

OMRON COMPANIES SHALL NOT BE LIABLE FOR SPECIAL, INDIRECT, INCIDENTAL, OR CONSEQUENTIAL DAMAGES, LOSS OF PROFITS OR PRODUCTION OR COMMERCIAL LOSS IN ANY

WAY CONNECTED WITH THE PRODUCTS, WHETHER SUCH CLAIM IS BASED IN CONTRACT, WARRANTY, NEGLIGENCE OR STRICT LIABILITY.

Further, in no event shall liability of Omron Companies exceed the individual price of the Product on which liability is asserted.

Application Considerations

Suitability of Use

Omron Companies shall not be responsible for conformity with any standards, codes or regulations which apply to the combination of the Product in the Buyer's application or use of the Product. At Buyer's request, Omron will provide applicable third party certification documents identifying ratings and limitations of use which apply to the Product. This information by itself is not sufficient for a complete determination of the suitability of the Product in combination with the end product, machine, system, or other application or use. Buyer shall be solely responsible for determining appropriateness of the particular Product with respect to Buyer's application, product or system. Buyer shall take application responsibility in all cases.

NEVER USE THE PRODUCT FOR AN APPLICATION INVOLVING SERIOUS RISK TO LIFE OR PROPERTY OR IN LARGE QUANTITIES WITHOUT ENSURING THAT THE SYSTEM AS A WHOLE HAS BEEN DESIGNED TO ADDRESS THE RISKS, AND THAT THE OMRON PRODUCT(S) IS PROPERLY RATED AND INSTALLED FOR THE INTENDED USE WITHIN THE OVERALL EQUIPMENT OR SYSTEM.

Programmable Products

Omron Companies shall not be responsible for the user's programming of a programmable Product, or any consequence thereof.

Disclaimers

Performance Data

Data presented in Omron Company websites, catalogs and other materials is provided as a guide for the user in determining suitability and does not constitute a warranty. It may represent the result of Omron's test conditions, and the user must correlate it to actual application requirements. Actual performance is subject to the Omron's Warranty and Limitations of Liability.

Change in Specifications

Product specifications and accessories may be changed at any time based on improvements and other reasons. It is our practice to change part numbers when published ratings or features are changed, or when significant construction changes are made. However, some specifications of the Product may

be changed without any notice. When in doubt, special part numbers may be assigned to fix or establish key specifications for your application. Please consult with your Omron's representative at any time to confirm actual specifications of purchased Product.

Errors and Omissions

Information presented by Omron Companies has been checked and is believed to be accurate; however, no responsibility is assumed for clerical, typographical or proofreading errors or omissions.

Statement of security responsibilities for assumed use cases and against threats

OMRON SHALL NOT BE RESPONSIBLE AND/OR LIABLE FOR ANY LOSS, DAMAGE, OR EXPENSES DIRECTLY OR INDIRECTLY RESULTING FROM THE INFECTION OF OMRON PRODUCTS, ANY SOFTWARE INSTALLED THEREON OR ANY COMPUTER EQUIPMENT, COMPUTER PROGRAMS, NETWORKS, DATABASES OR OTHER PROPRIETARY MATERIAL CONNECTED THERETO BY DISTRIBUTED DENIAL OF SERVICE ATTACK, COMPUTER VIRUSES, OTHER TECHNOLOGICALLY HARMFUL MATERIAL AND/OR UNAUTHORIZED ACCESS.

It shall be the users sole responsibility to determine and use adequate measures and checkpoints to satisfy the users particular requirements for (i) antivirus protection, (ii) data input and output, (iii) maintaining a means for reconstruction of lost data, (iv) preventing Omron Products and/or software installed thereon from being infected with computer viruses and (v) protecting Omron Products from unauthorized access.

Safety Precautions

Definition of Precautionary Information

The following notation is used in this manual to provide precautions required to ensure safe usage of the NXR-series IO-Link I/O Hub.
The safety precautions that are provided are extremely important to safety. Always read and heed the information provided in all safety precautions.
The following notation is used.

⚠ WARNING	Indicates a potentially hazardous situation which, if not avoided, could result in death or serious injury. Additionally, there may be severe property damage.
⚠ Caution	Indicates a potentially hazardous situation which, if not avoided, may result in minor or moderate injury, or property damage.

Symbols

	The circle and slash symbol indicates operations that you must not do. The specific operation is shown in the circle and explained in text. This example indicates prohibiting disassembly.
	The triangle symbol indicates precautions (including warnings). The specific operation is shown in the triangle and explained in text. This example indicates a precaution for electric shock.
	The triangle symbol indicates precautions (including warnings). The specific operation is shown in the triangle and explained in text. This example indicates a general precaution.
	The filled circle symbol indicates operations that you must do. The specific operation is shown in the circle and explained in text. This example shows a general precaution for something that you must do.

Warnings

⚠ WARNING

During Power Supply

Do not touch the terminal section while power is ON.
Electric shock may occur.

Do not attempt to take any Unit apart.
In particular, high-voltage parts are present in Units that supply power while power is supplied or immediately after power is turned OFF. Touching any of these parts may result in electric shock. There are sharp parts inside the Unit that may cause injury.

Fail-safe Measures

Provide safety measures in external circuits to ensure safety in the system if an abnormality occurs due to malfunction of the CPU Unit, other Units, or slaves or due to other external factors affecting operation.
Not doing so may result in serious accidents due to incorrect operation.

Emergency stop circuits, interlock circuits, limit circuits, and similar safety measures must be provided in external control circuits.

The outputs may remain ON or OFF due to deposition or burning of the output relays or destruction of the output transistors. As a countermeasure for such problems, external safety measures must be provided to ensure safe operation of the system.

The CPU Unit will turn OFF all outputs from Basic Output Units in the following cases.
The remote I/O slaves will operate according to the settings in the slaves.

- If a power supply error occurs.
- If the power supply connection becomes faulty.
- If a CPU watchdog timer error or CPU reset occurs.
- If a Controller error in the major fault level occurs.
- While the CPU Unit is on standby until RUN mode is entered after the power is turned ON

External safety measures must be provided to ensure safe operation of the system in such cases.

You must take fail-safe measures to ensure safety in the event of incorrect, missing, or abnormal signals caused by broken signal lines, momentary power interruptions, or other causes.
Not doing so may result in serious accidents due to incorrect operation.

Voltage and Current Inputs

Make sure that the voltages and currents that are input to the Hubs are within the specified ranges.
Inputting voltages or currents that are outside of the specified ranges may cause accidents or fire.

Precautions for Safe Use

Transporting

- When transporting any Unit, use the special packing box for it. Also, do not subject the Unit to excessive vibration or shock during transportation.
- Do not drop any Unit or subject it to abnormal vibration or shock.
  Doing so may result in Unit failure or malfunction.

Installation

- Make sure that all Unit mounting screws are tightened to the torque specified in this manuals.
- Be sure that the communications cables and other items with locking devices are properly locked into place.
- Before touching a Unit, be sure to first touch a grounded metallic object in order to discharge any static build-up.

Wiring

- Make sure that all cable connector screws and waterproof cover screws are tightened to the torque specified in this manual.
- If the Unit is used in more than one system, be sure to keep a clearance of at least 5 mm between cables to prevent unstable operation due to interference. Do not bundle the cables together.
- Observe the following precautions when wiring the communications cable.
  Keep the communications cables away from power lines and high-voltage lines.
- Use cables, connectors, and waterproof covers that are specified in this manual.
- Use the recommended communications cables that are specified in this manual.
- Double-check all wiring to make sure that it is correct before turning ON the power supply.
- Use the correct wiring parts and tools when you wire the system.
- Do not pull on the cables or bend the cables beyond their natural limit.
- Do not place heavy objects or step on top of the cables.

Power Supply Design

- Use the power supply voltage that is specified in this manual.

Setting an IO-Link I/O Hub

- When you connect an external device, check the port settings for pin 4 and pin 2.

IO-Link Communications

- Make sure that the communications distance and method of connection for IO-Link are within specifications.
- Do not exceed the specifications of the connected IO-Link Master Units.
- IO-Link communications are not always established immediately after the power supply is turned ON. Confirm that the *Input Data Enabled* for the I/O data in the IO-Link Master Unit is TRUE before you use the IO-Link process input data. Refer to the *NXR-series IO-Link Master Unit for EtherNet/IP User's Manual (Cat. No. W619)* or *NXR-series IO-Link Master Unit for EtherCAT User's Manual (Cat. No. W640)* for details on the specifications of *Input Data Enabled*.

Actual Operation

- Check the user program, data, and parameter settings for proper execution before you use them for actual operation.
- Take appropriate measures to ensure that the specified power with the rated voltage and frequency is supplied in places where the power supply is unstable.

Turning OFF the Power Supply

- Always turn OFF the external power supply to the IO-Link I/O Hubs and the power to the devices to communicate with the Hubs before you connect the communications cables.
- Always turn OFF the external power supply to the IO-Link I/O Hubs before attempting any of the following.
  Assembling Units including the connected devices
  Connecting or wiring cables
  Attaching or removing connectors

Operation

- Confirm that the controlled system will not be adversely affected before you perform any of the following operations.
  Changing the operating mode of the CPU Unit (including changing the setting of the Operating Mode at Startup)
  Changing the user program or settings
  Changing set values or present values
  Forced refreshing
- The CPU Unit refreshes I/O even when the program is stopped (i.e., even in *PROGRAM* mode).
  Confirm safety thoroughly in advance before changing the status of any part of memory allocated to I/O Units, Special I/O Units, or CPU Bus Units. Any changes to the data allocated to any Unit specifically the Special I/O Units/CPU Bus Units may result in unexpected operation of the loads connected to the Unit.
  Transferring I/O memory data to the CPU Unit with a Programming Device (PC tool).
  Changing present values in memory with a Programming Device.
  Force-setting/-resetting bits with a Programming Device.
  Transferring I/O memory files from a memory card or EM file memory to the CPU Unit.

Transferring I/O memory from a host computer or from another PLC on a network.

Maintenance

- Do not use paint thinner when cleaning. Use commercially available alcohol.
- Do not use high-pressure cleaning.

Disposal

- Dispose of the product according to local ordinances as they apply.

Precautions for Correct Use

Storage, Mounting, and Wiring

- Do not operate or store the Units in the following locations. Doing so may result in malfunction or in operation stopping.
  Locations subject to direct sunlight
  Locations subject to temperatures or humidity outside the range specified in the specifications
  Locations subject to condensation as the result of severe changes in temperature
  Locations subject to corrosive or flammable gases
  Locations subject to dust (especially iron dust) or salts
  Locations subject to exposure to acid, oil, or chemicals
  Locations subject to shock or vibration
  Locations close to power lines
- Take appropriate and sufficient countermeasures during installation in the following locations.
  Locations subject to static electricity or other forms of noise
  Locations subject to strong electromagnetic fields
  Locations subject to possible exposure to radioactivity
  Locations close to power supply lines
- Wire all connections correctly according to instructions in this manual.
- Do not use the Unit continuously submerged in water.

IO-Link Communications

- Do not disconnect the IO-Link communications cables during operation. The outputs will become unstable.

Regulations and Standards

Conformance to EU Directives

Applicable Directives

- EMC Directives
- Low Voltage Directive

Concepts

● EMC Directives

OMRON devices that comply with EU Directives also conform to the related EMC standards so that they can be more easily built into other devices or the overall machine. The actual products have been checked for conformity to EMC standards.*1

Whether the products conform to the standards in the system used by the customer, however, must be checked by the customer. EMC-related performance of the OMRON devices that comply with EU Directives will vary depending on the configuration, wiring, and other conditions of the equipment or control panel on which the OMRON devices are installed. The customer must, therefore, perform the final check to confirm that devices and the overall machine conform to EMC standards.

*1. Applicable EMC (Electromagnetic Compatibility) standards are as follows: EMS (Electromagnetic Susceptibility): EN 61131-2, EMI (Electromagnetic Interference): EN 61131-2 (Radiated emission: 10-m regulations).

● Low Voltage Directive

Always ensure that devices operating at voltages of 50 to 1,000 VAC and 75 to 1,500 VDC meet the required safety standards. The applicable directive is EN 61010-2-201.

● Conformance to EU Directives

The NXR-series products comply with EU Directives. To ensure that the machine or device in which the NXR-series products are used complies with EU Directives, the following precautions must be observed.

- You must use SELV power supply for the DC power supplies that are connected as the Unit/input power supplies and output power supplies for the NXR-series products.
  We recommend that you use the OMRON S8VK-S-series Power Supplies. EMC standard compliance was confirmed for the recommended Power Supplies.
- NXR-series products that comply with EU Directives also conform to the Common Emission Standard. Radiated emission characteristics (10-m regulations) may vary depending on the configuration of the control panel used, other devices connected to the control panel, wiring, and other conditions.
  You must therefore confirm that the overall machine or equipment in which the NXR-series products are used complies with EU Directives.
- You must use power supplies with an output hold time of 10 ms or longer for the DC power supplies that are connected as the Unit/input power supplies and output power supplies for the NXR-series products.

- This is a Class A product (for industrial environments). In a residential environment, it may cause radio interference. If radio interference occurs, the user may be required to take appropriate measures.
- Conformance to EU Directives was confirmed using power supply cables and I/O cables with a cable length of 30 m or shorter.

Conformance to UL and CSA Standards

Some NXR-series products comply with UL and CSA standards.
If you use a product that complies with UL or CSA standards and must apply those standards to your machinery or devices, refer to the *Instruction Sheet* that is provided with the product. The *Instruction Sheet* provides the application conditions for complying with the standards.

Conformance to Shipbuilding Standards

This product does not comply with any shipbuilding standards.

Conformance to KC Certification

When you use this product in South Korea, observe the following precautions.

사 용 자 안 내 문
이 기기는 업무용 환경에서 사용할 목적으로 적합성평가를 받은 기기로서 가정용 환경에서 사용하는 경우 전파간섭의 우려가 있습니다.

This product meets the electromagnetic compatibility requirements for business use. There is a risk of radio interference when this product is used in home.

Software Licenses and Copyrights

This product does not incorporate any third party software.

Unit Versions

This section describes the notation that is used for unit versions, the confirmation method for unit versions, and the relationship between unit versions and Support Software versions.

Unit Versions

A “unit version” has been introduced to manage the Hubs in the NXR Series according to differences in functionality accompanying Hub upgrades.

Notation of Unit Versions on Products

The *unit version* is printed on the side of the product.
For NXR-series NXR-□□□□□□-IL□:

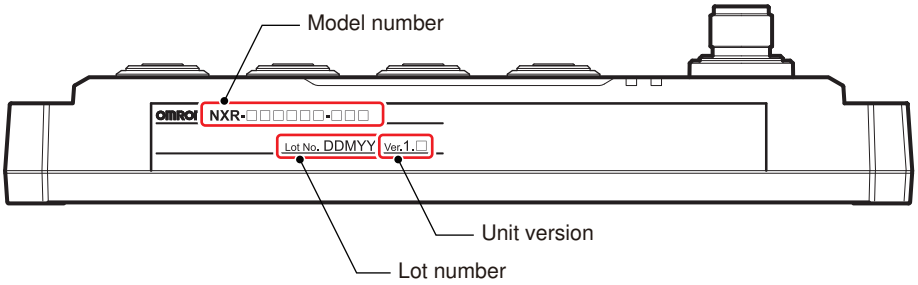

The following information is printed on the side of the product.

Name	Function
Model number	Gives the model of the Hub.
Unit version	Gives the unit version of the Hub.
Lot number	Gives the lot number of the Hub. DDMYY: Lot number “M” gives the month (1 to 9: January to September, X: October, Y: November, Z: December)

Unit Versions and Support Software Versions

The functions that are supported depend on the unit version of the Hub. The version of Support Software that supports the functions that were added for an upgrade is required to use those functions. Refer to *A-1 Version Information* on page A-2 for the functions that are supported by each version.

Related Manuals

The following table shows the manuals related to this product. Use these manuals for reference.

Manual name	Cat. No.	Models	Application	Contents
NXR-series IO-Link I/O Hub User's Manual	W620	NXR-□□□□□□-IL□	Learning how to use an NXR-series IO-Link I/O Hub.	The hardware, setup methods, and functions of the NXR-series IO-Link I/O Hub, which is an IO-Link device, are described.
NXR-series IO-Link Master Unit for EtherNet/IP™ User's Manual	W619	NXR-ILM08C-EIT	Learning how to use an NXR-series IO-Link Master Unit for EtherNet/IP.	The hardware, setup methods, and functions of the NXR-series IO-Link Master Unit for EtherNet/IP are described.
NXR-series IO-Link Master Unit for EtherCAT® User's Manual	W640	NXR-ILM08C-ECT	Learning how to use an NXR-series IO-Link Master Unit for EtherCAT.	The hardware, setup methods, and functions of the NXR-series IO-Link Master Unit for EtherCAT are described.

Terminology

Term	Meaning
DTM	An abbreviation for Device Type Manager that refers to a device drive.
IO-Link device	A device with a sensor or actuator that can perform IO-Link communications with the IO-Link master. IO-Link devices are simply referred to as "devices" in IO-Link specifications but in this manual "IO-Link" is added to distinguish these devices from other communications devices.
IO-Link data object	Data in the devices that you can access with message communications or cyclic communications.
IO-Link master	A device that performs IO-Link communications with the IO-Link devices in the IO-Link System and simultaneously communicates with the Controller through the network. "IO-Link Master Unit" is used to refer to a specific Unit.
IO-Link I/O Hub	An IO-Link device that supports IO-Link communications. The Hub exchanges I/O data from the external devices connected to it with the IO-Link Master Unit.
IODD	An abbreviation for IO Device Description that refers to files containing IO-Link device definitions.
SIO (DI) Mode	One of the communications mode settings for an IO-Link Master Unit. A communications mode to input digital signals (ON/OFF signals) from the connected input devices.
SIO (DO) Mode	One of the communications mode settings for an IO-Link Master Unit. A communications mode to output digital signals (ON/OFF signals) to the connected output devices.
connected external device	A generic term that refers to non-IO-Link sensors and actuators connected to IO-Link I/O Hubs.
process output data	Output data sent from the IO-Link Master Units to the IO-Link devices in IO-Link communications.
process data	I/O data in the IO-Link devices. You can allocate a maximum of 32 bytes of process input data and process output data in the IO-Link master. A generic term for the IO-Link process input data and IO-Link process output data in IO-Link devices.
process input data	Input data received from an IO-Link device to the IO-Link Master Units in IO-Link communications.
port	An I/O connection port of the IO-Link I/O Hub. A non-IO-Link external device is connected to a port.

Revision History

A manual revision code appears as a suffix to the catalog number on the front and back covers of the manual.

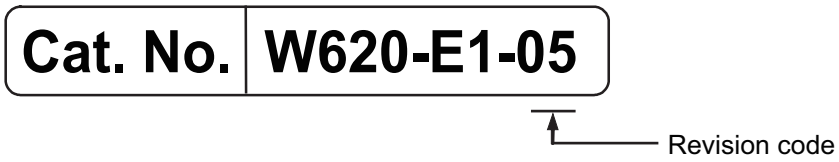

Revision code	Date	Revised content
01	April 2020	Original production
02	July 2020	Corrected mistakes.
03	November 2020	• Made changes accompanying the acquisition of UL and CSA standards certification. • Corrected mistakes.
04	December 2023	Made changes accompanying the addition of the NXR-series NXR-ILM08C-ECT IO-Link Master Unit for EtherCAT.
05	October 2026	Made changes for IP65 compliance.

1

Features and System Configuration

This section describes the features and system configuration of NXR-series IO-Link I/O Hubs.

1-1 Types and Features of IO-Link I/O Hubs 1-2
1-1-1 Types 1-3
1-1-2 Features 1-3
1-2 System Configuration 1-5
1-3 List of Functions 1-7

1-1 Types and Features of IO-Link I/O Hubs

NXR-series IO-Link I/O Hubs are IO-Link devices that feature the functionality to communicate with IO-Link Master Unit through IO-Link and the environmental resistance of IP65/IP67. The Hubs output the data that are received from the IO-Link Master Unit to a connected external device through IO-Link communications, and send the data that are input from a connected external device to the IO-Link Master Unit through IO-Link communications. NXR-series IO-Link I/O Hubs can be connected to an NXR-series IO-Link Master Unit for EtherNet/IP and NXR-series IO-Link Master Unit for EtherCAT.

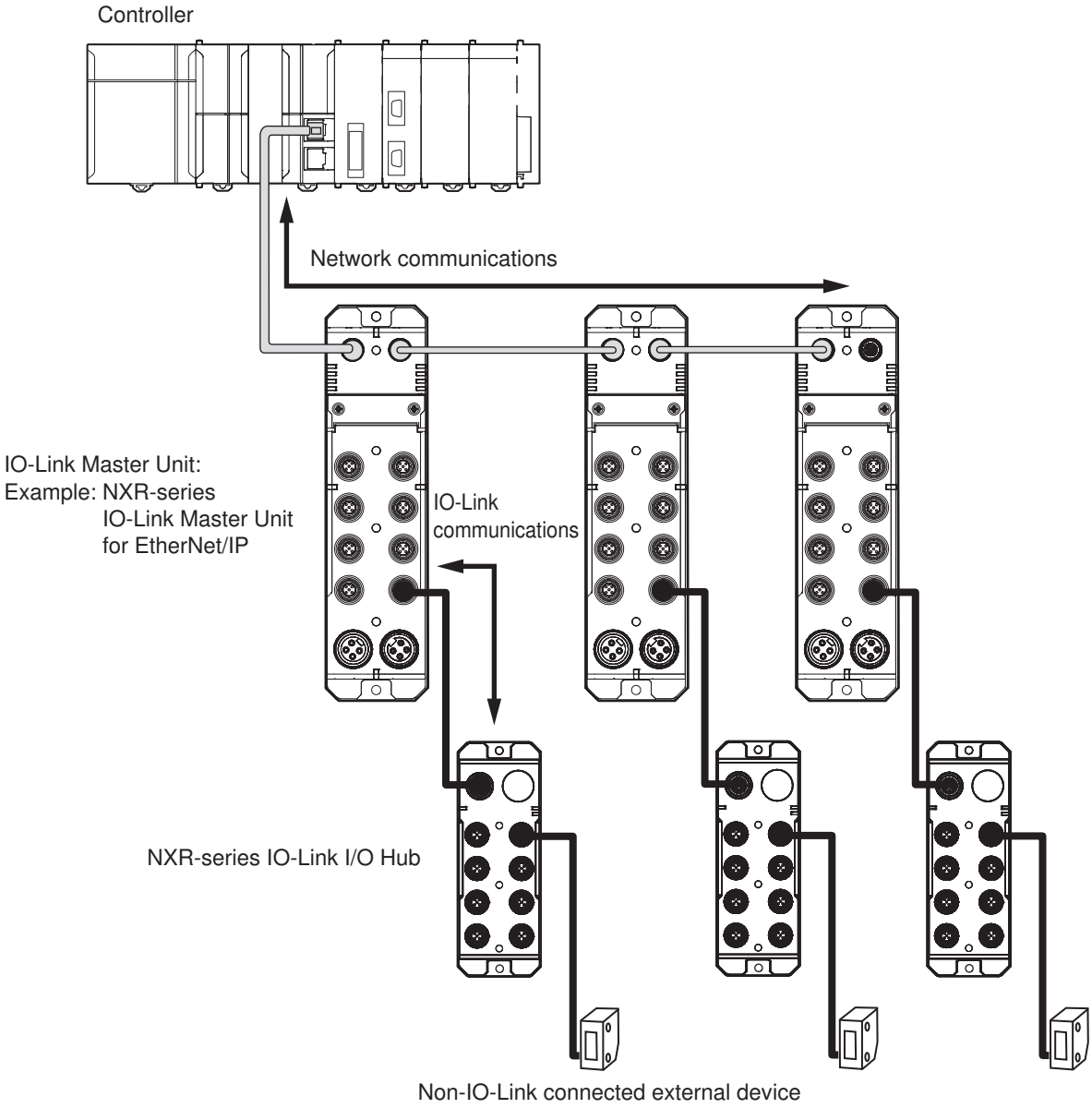

The following describes the types and features.

1-1-1 Types

The types of NXR-series IO-Link I/O Hubs are shown below.

Digital I/O Hub

Type	I/O points	Models	Description
Digital Input Hub	16 inputs (For PNP)	NXR-ID166C-IL2	The Digital Input Hub processes input of digital signals from connected external devices. The Hub also communicates with the IO-Link Master Unit through IO-Link.
Digital I/O Variable Hub	16 variable I/Os (For PNP)	NXR-CD166C-IL2	The Digital I/O Variable Hub has functionality to process input of digital signals from connected external devices as well as functionality to process output of digital signals to connected external devices. The Hub allows you to set each of pin 4 and pin 2 of the ports to input or output. The Hub also communicates with the IO-Link Master Unit through IO-Link.

1-1-2 Features

The NXR-series IO-Link I/O Hubs have the following features.

Features of Digital Input Hub

● Expanding the Number of Digital Inputs of IO-Link Master Unit

In combination with an NXR-series IO-Link Master Unit for EtherNet/IP or NXR-series IO-Link Master Unit for EtherCAT, the Digital Input Hub can expand the number of inputs up to 136 points per node. *1

*1. You can use up to 136 points when you use the eight digital inputs for pin 2 of your IO-Link Master Unit. If you do not use digital inputs for pin 2, you can use up to 128 points.

● Detecting Errors That Occur between the Digital Input Hub and a Connected External Device

The Digital Input Hub detects short-circuit and disconnection that occur to the I/O cables between the Digital Input Hub and a connected external device.
(Refer to *7-1-2 I/O Cable Disconnection Detection* on page 7-3 and *7-1-3 I/O Cable Short-circuit Detection* on page 7-6.)

Features of Digital I/O Variable Hub

● Expanding the Number of Digital I/O Points of IO-Link Master Unit

In combination with an NXR-series IO-Link Master Unit for EtherNet/IP or NXR-series IO-Link Master Unit for EtherCAT, the Digital I/O Variable Hub can expand the number of inputs up to 136 points and the number of outputs up to 128 points per node. *1

*1. You can use up to 136 points when you use the eight digital inputs for pin 2 of your IO-Link Master Unit. If you do not use digital inputs for pin 2, you can use up to 128 points.

● Detecting Errors That Occur between the Digital I/O Variable Hub and a Connected External Device

The Digital I/O Variable Hub detects short-circuit and disconnection that occur to the I/O cables between the Digital I/O Variable Hub and a connected external device.
(Refer to *7-1-2 I/O Cable Disconnection Detection* on page 7-3 and *7-1-3 I/O Cable Short-circuit Detection* on page 7-6.)

● Full Use of I/Os

The Digital I/O Variable Hub allows you to set each of the 16 points for input or output. This enables you to make full use of the I/Os.
(Refer to *7-1-1 I/O Function* on page 7-2.)

1-2 System Configuration

An example of a system configuration for the NXR-series IO-Link I/O Hub is shown below.

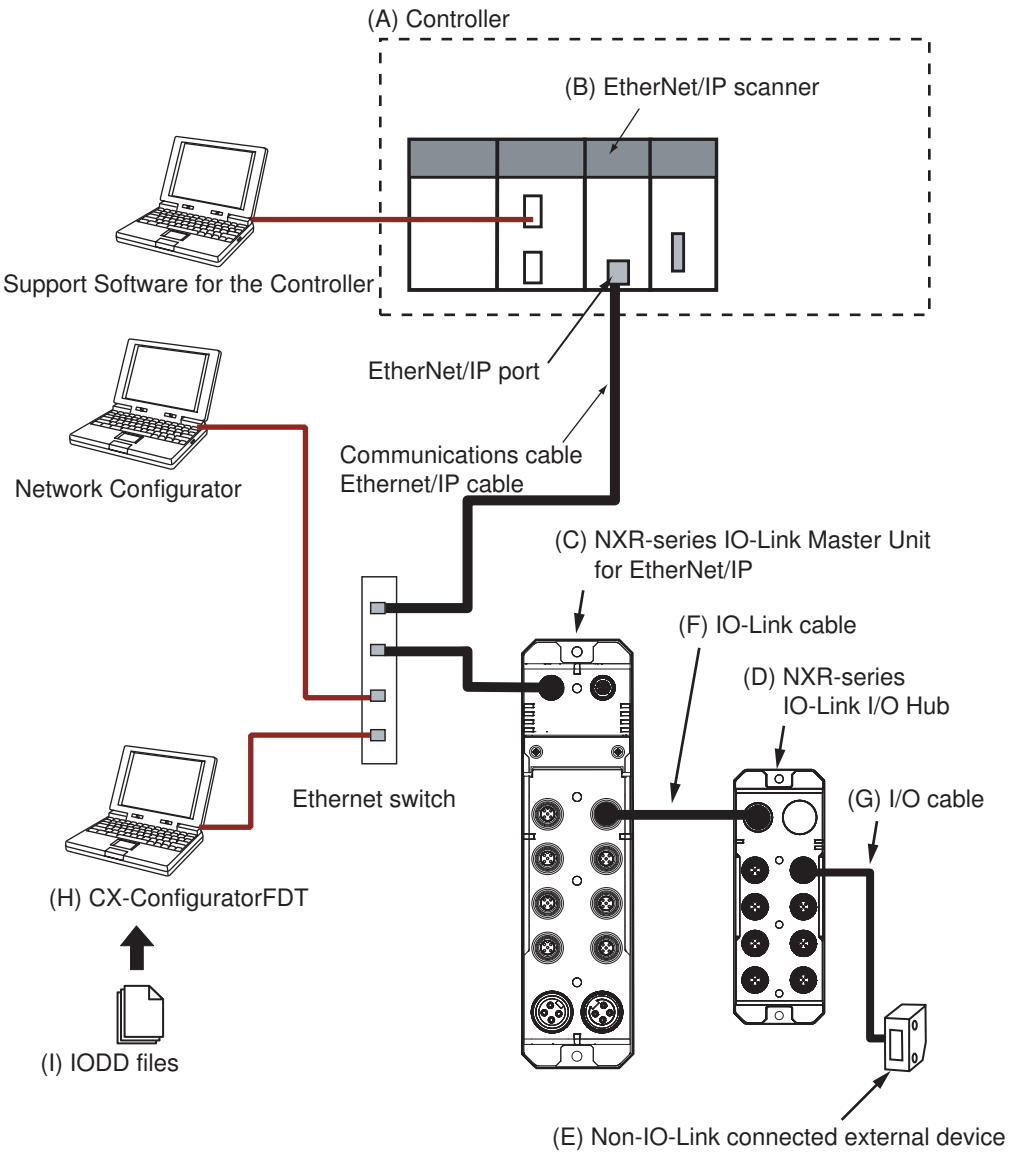

Letter	Item	Description
(A)	Controller	This is an OMRON CPU Unit or a controller from another company, connected to the IO-Link Master Unit through an EtherNet/IP adapter. It exchanges I/O data with the IO-Link Master Unit and executes a user program through EtherNet/IP.
(B)	EtherNet/IP scanner	The EtherNet/IP scanner monitors the status of the connections with EtherNet/IP adapters and exchanges I/O data with EtherNet/IP adapters through the EtherNet/IP network.

Letter	Item	Description
(C)	NXR-series IO-Link Master Unit for EtherNet/IP	An EtherNet/IP adapter that provides IO-Link master functions with an environmental resistance of IP65/IP67. The Unit performs the following: • Exchanging data with the EtherNet/IP scanner through the EtherNet/IP network • Exchanging data with the NXR-series IO-Link I/O Hub through IO-Link communications The NXR-series IO-Link I/O Hubs can connect to the IO-Link Master Units shown in version information. Refer to *A-1 Version Information* on page A-2 for the models of the IO-Link Master Units to which the Hubs can connect.
(D)	NXR-series IO-Link I/O Hub	An IO-Link device. The Hub exchanges I/O data from the external devices connected to it with the IO-Link Master Unit through IO-Link communications.
(E)	Non-IO-Link connected external device	A sensor, actuator, or other device that handles ON/OFF signals.
(F)	IO-Link cable	A cable that connects an IO-Link Master Unit to an IO-Link I/O Hub. The cable is called an IO-Link cable in the user's manual for an IO-Link I/O Hub, and called an I/O cable in the user's manual for the OMRON IO-Link Master Unit.
(G)	I/O cable	A cable that connects an IO-Link I/O Hub to a non-IO-Link connected external device.
(H)	CX-ConfiguratorFDT*1	A Support Software to configure and monitor IO-Link I/O Hubs. The software is included in the CX-One FA Integrated Tool Package and the Sysmac Studio Automation Software.
(I)	IODD files	These files contain IO-Link device definitions. The IODD files for OMRON's IO-Link devices are automatically installed when you install CX-ConfiguratorFDT. OMRON IO-Link device files are available for download from the OMRON website.

*1. Refer to *A-1 Version Information* on page A-2 for the available versions.

1-3 List of Functions

The NXR-series IO-Link I/O Hub has the following functions.

Digital I/O Hub

Function	Description	Available Hub	Reference
I/O function	This function enables you to set pin 4 and pin 2 of each port to input or output, depending on the devices connected to the Digital I/O Variable Hub.	I/O Variable Hub	*7-1-1 I/O Function* on page 7-2
I/O cable disconnection detection	This function detects disconnection of I/O cables from the Digital I/O Hub. You can enable or disable the disconnection detection.	All models	*7-1-2 I/O Cable Disconnection Detection* on page 7-3
I/O cable short-circuit detection	This function detects short-circuits in I/O cables for the Digital I/O Hub. When a short-circuit occurs, the Hub turns off the power supply to the sensor and the digital output to protect the internal circuit.	All models	*7-1-3 I/O Cable Short-circuit Detection* on page 7-6
All hold bits reset	This function resets all hold bits for detection of disconnection, short-circuit, and power supply voltage drop that occur to the Digital I/O Hub.	All models	*7-1-4 All Hold Bits Reset* on page 7-9
Voltage drop detection for Unit/input power supply	This function monitors the Unit/input power supply voltage fed to the Digital I/O Hub, and detects voltage drop when the voltage decreases below the monitored voltage.	All models	*7-1-5 Voltage Drop Detection for Unit/Input Power Supply* on page 7-10
Voltage drop detection for output power supply	This function monitors the output power supply voltage fed to the Digital I/O Variable Hub, and detects voltage drop when the voltage decreases below the monitored voltage.	I/O Variable Hub	*7-1-6 Voltage Drop Detection for Output Power Supply* on page 7-11
Digital input filter	This function eliminates the chattering or the noises from input signals to the Digital I/O Hub. When the input data changes without stabilization of the state of the contact point due to chattering and noise, this function prevents changes in data and stabilizes it.	All models	*7-1-7 Digital Input Filter* on page 7-12
Communications error output setting	This function performs the preset output operation when the Digital I/O Variable Hub cannot receive output data from the IO-Link Master Unit.	I/O Variable Hub	*7-1-8 Communications Error Output Setting* on page 7-15
Monitoring total power-ON time	This function records the time period during which the Unit/input power is supplied to the Digital I/O Hub, and displays the period as the operating hours of the Hub.	All models	*7-1-9 Monitoring Total Power-ON Time* on page 7-16

2

Specifications and Application Procedures

This section describes the specifications, dimensions, and application procedures for the NXR-series IO-Link I/O Hubs.

2-1 Specifications **2-2**
2-1-1 General Specifications 2-2
2-1-2 Individual Specifications 2-2
2-2 Dimensions **2-7**
2-3 Application Procedures **2-8**

2-1 Specifications

This section describes the general specifications and individual specifications of the IO-Link I/O Hubs.

2-1-1 General Specifications

The following table gives the general specifications of the IO-Link I/O Hubs.

Item		Specification
Degree of protection		IP65/IP67
Operating environment	**Ambient operating temperature**	-10 to 55°C
	Ambient operating humidity	25% to 85% (with no condensation)
	Atmosphere	Must be free from corrosive gases.
	Storage temperature	-25 to 65°C
	Storage humidity	25% to 85% (with no condensation)
	Altitude	2,000 m max.
	Pollution degree	3 or less: Conforms to IEC 61010-2-201.
	Noise immunity	2 kV on power supply line (Conforms to IEC 61000-4-4.)
	Overvoltage category	Category II: Conforms to IEC 61010-2-201.
	EMC immunity level	Zone B
	Vibration resistance	10 to 60 Hz with amplitude of 0.35 mm, 60 to 150 Hz and 50 m/s^2 80 min each in X, Y, and Z directions
	Shock resistance	150 m/s^2, 3 times each in 6 directions along X, Y, and Z axes
Applicable standards*1		cULus: Listed (UL61010-2-201) EU: EN 61131-2, RCM KC: KC Registration EAC IO-Link conformance

*1. Refer to the OMRON website (www.ia.omron.com) or ask your OMRON representative for the most recent applicable standards for each model.

2-1-2 Individual Specifications

The following table gives the specifications of the individual IO-Link I/O Hubs.

Digital I/O Hub

Item	Specification	
Model	NXR-ID166C-IL2	NXR-CD166C-IL2
Device type	Digital Input Hub	Digital I/O Variable Hub
Unit/input power supply voltage	24 VDC (20.4 to 26.4 VDC)	
Current consumption from Unit/input power supply	40 mA max.	

Item		Specification	
Maximum current of Unit/input power supply		0.84 A	
Output power supply voltage		---	24 VDC (20.4 to 26.4 VDC)
Current consumption from output power supply		---	40 mA max.
Maximum current of output power supply		---	2.0 A
Dimensions		174 × 24.2 × 62 mm (W×H×D) (The height is 37.8 mm when the connectors are included.)	
Isolation method		No isolation	
Weight		280 g	
Circuit layout		• NXR-ID166C-IL2 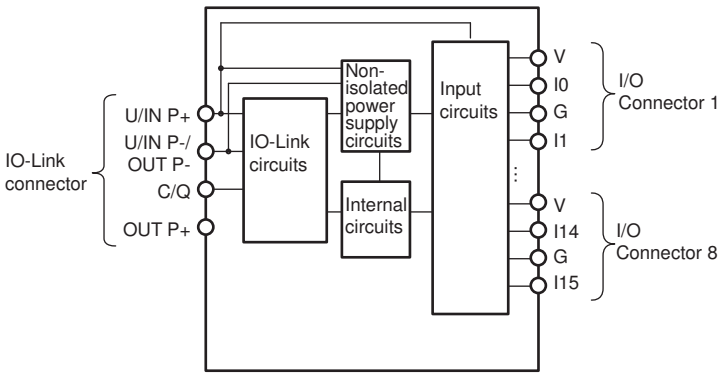 • NXR-CD166C-IL2 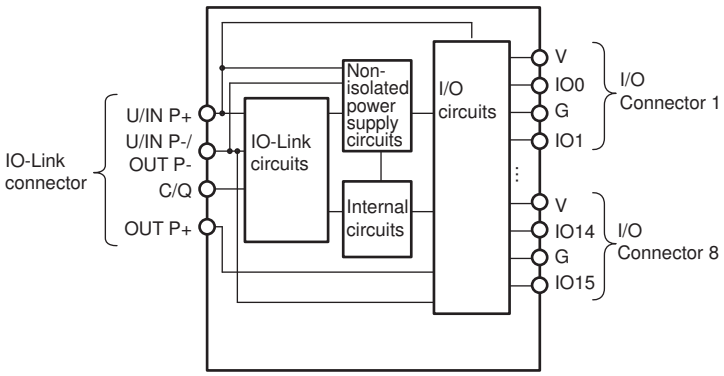 	
IO-Link specifications	**Communications protocol**	IO-Link protocol	
	Frame type	2.6	2.2

Item		Specification	
	Baud rate	COM2: 38.4 kbps	
		Start-stop synchronization UART	
		1:1	
	Commu-nications distance	20 m max.	
	Data in order	Big endian	
	Synchro-nization method	ISDU (Indexed Service Data Unit)	
	Minimum cycle time	10 ms	
	Process input data size	20 bytes	
	Process output data size	---	2 bytes
	M-se-quence	TYPE_2_V	TYPE_2_V
	Vendor ID1	02 hex	02 hex
	Vendor ID2	64 hex	64 hex
	Vendor Name	OMRON Corporation	OMRON Corporation
	Vendor Text	OMRON Corporation	OMRON Corporation
	Device ID1	05 hex	05 hex
	Device ID2	00 hex	00 hex
	Device ID3	01 hex	02 hex
	Product Name	NXR-ID166C-IL2	NXR-CD166C-IL2
	Product ID	NXR-ID166C-IL2	NXR-CD166C-IL2
	Product Text	IO-Link I/O Hub	IO-Link I/O Hub
Moun ting spec-ifica-tions	**Mounting method**	Mounting with M5 screws	
	Mounting strength	100 N	

Item		Specification	
	Connector strength	30 N Applicable to all connectors	
	Connector type	• IO-Link connector: M12 (A-coding, male) • I/O connector: M12 (A-coding, female) × 8	
	Screw tightening torque	• IO-Link connector and I/O connector (M12 screw): 0.5 to 0.6 N·m • Hub mounting (M5 screw): 1.47 to 1.96 N·m	
	Installation orientation and restrictions	• Installation orientation: 6 possible orientations • Restrictions: No restrictions	
Digital input	**Number of inputs**	16	0 to 16 (variable)
	Internal I/O common	PNP	
	ON voltage/ON current	15 VDC min., 3 mA min. (between each input terminal and G)	
	OFF voltage/OFF current	5 VDC max., 1 mA max. (between each input terminal and G)	
	Input current	4.0 mA (for 24 VDC)	
	Sensor power supply current	100 mA max./port	
	ON response time	0.1 ms max.	
	OFF response time	0.2 ms max.	
	Input filter	0 ms, 0.5 ms, 1 ms (default), 2 ms, 4 ms, 8 ms, 16 ms, 32 ms, 64 ms, 128 ms	
	Short-circuit protection	Provided*1	
	Short-circuit detection	Provided*1	
	Line disconnection detection	Provided*2	

Item		Specification	
Digital output	**Number of outputs**	---	0 to 16 (variable)
	Maximum load current	---	500 mA/point
	OFF leakage current	---	0.3 mA max.
	Internal I/O common	---	PNP
	ON response time	---	0.5 ms max.
	OFF response time	---	1.5 ms max.
	Residual voltage	---	1.2 V max. (0.5 ADC, between each output terminal and G)
	Short-circuit protection	---	Provided*3
	Short-circuit detection	---	Provided*3
	Line disconnection detection	---	Provided*4

*1. Detects a short-circuit that occurred between the power supply +(V) and power supply -(G) of the I/O connectors to protect the IO-Link I/O Hubs.
*2. Detects a disconnection of the power supply +(V) of the I/O connectors.
*3. Detects a short-circuit that occurred between pin 4 and the power supply -(G) and between pin 2 and the power supply -(G) to protect the IO-Link I/O Hubs.
*4. Detects a disconnection of pin 4 and pin 2 of the I/O connectors.

2-2 Dimensions

The following diagram gives dimensions of an IO-Link I/O Hub.

Digital I/O Hub

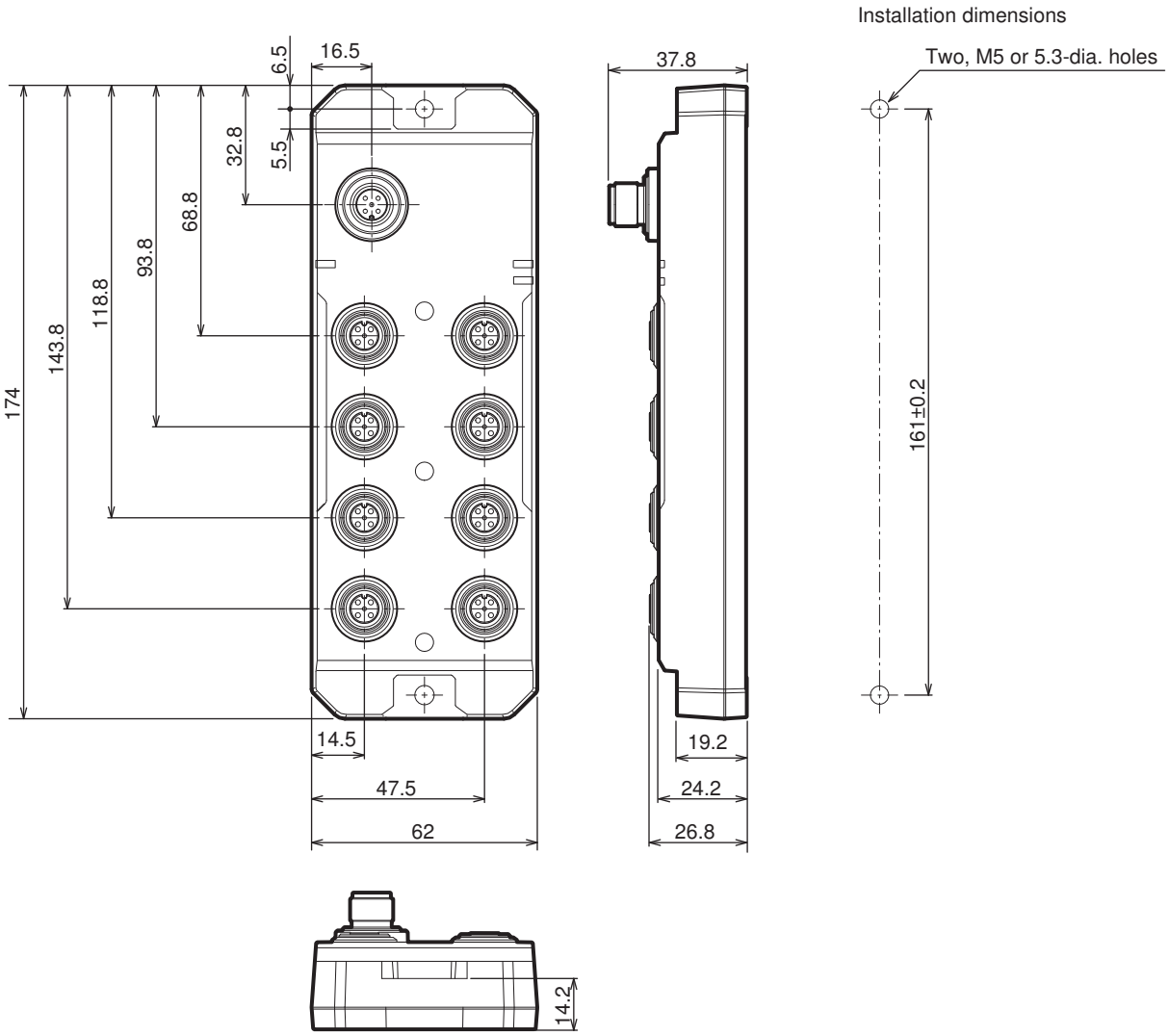

2-3 Application Procedures

The following table gives the basic application procedure for the IO-Link I/O Hubs.

Step	Item	Description	Reference
1	Setting, Installing, and Wiring the IO-Link Master Unit Hardware	Set, install, and wire the IO-Link Master Unit hardware.	• *NXR-series IO-Link Master Unit for EtherNet/IP User's Manual (Cat. No. W619)* • *NXR-series IO-Link Master Unit for EtherCAT User's Manual (Cat. No. W640)*
2	Installing and Wiring the IO-Link I/O Hub	Install and wire the IO-Link I/O Hub.	*Section 5 Installation and Wiring* on page 5-1
3	Turning ON the Unit/Input Power Supply to the IO-Link I/O Hub	Turn ON the Unit/input power supply to the IO-Link Master Unit. The Unit/input power is supplied through the IO-Link Master Unit to the IO-Link I/O Hub.	• *NXR-series IO-Link Master Unit for EtherNet/IP User's Manual (Cat. No. W619)* • *NXR-series IO-Link Master Unit for EtherCAT User's Manual (Cat. No. W640)*
4	Setting the Parameters of the IO-Link Master Unit	For pin 4 and pin 2 of the port of the IO-Link Master Unit that is connected to the IO-Link I/O Hub, set communications mode as follows: • Pin 4: IO-Link Mode • Pin 2: Make the setting depending on the type of the Hub and other conditions To use outputs of the Digital I/O Variable Hub, set the pin to SIO (DO) Mode. This makes the pin serve as a digital output. Turn ON the output power supply to the IO-Link Master Unit, and then turn ON this digital output to supply the output power through the IO-Link Master Unit to the Digital I/O Variable Hub. To use only inputs of the Digital Input Hub or the Digital I/O Variable Hub, set the pin to SIO (DI) Mode.	
5	Setting the Parameters of the IO-Link I/O Hub	Configure the functions of the IO-Link I/O Hub from CX-ConfiguratorFDT. The following is an example of the functions to configure: Example: I/O function of the Digital I/O Variable Hub*1	*Section 7 Functions of IO-Link I/O Hubs* on page 7-1
6	Supplying the Output Power to the Digital I/O Variable Hub*2	Turn ON the output power supply to the IO-Link Master Unit. Then, turn ON the digital output that you set in step 4 which is pin 2 of the IO-Link Master Unit. This supplies the output power through the IO-Link Master Unit to the Digital I/O Variable Hub.	• *NXR-series IO-Link Master Unit for EtherNet/IP User's Manual (Cat. No. W619)* • *NXR-series IO-Link Master Unit for EtherCAT User's Manual (Cat. No. W640)*
7	Checking Operation	Check that the IO-Link I/O Hub exchanges I/O data correctly with the IO-Link Master Unit by following the checking methods for the wiring.	

*1. To use outputs of the Digital I/O Variable Hub, setting is required.

*2. To use outputs of the Digital I/O Variable Hub, power supply is required.

3

Part Names and Functions

This section describes the part names and functions of the parts of the NXR-series IO-Link I/O Hubs.

3-1 Parts and Names 3-2

3-2 Indicators 3-4

3-2-1 Status Indicators 3-4

3-2-2 I/O Indicators 3-5

3-3 Connectors 3-7

3-3-1 IO-Link Connector 3-7

3-3-2 I/O Connectors 3-7

3-1 Parts and Names

This section gives the names of the parts of the IO-Link I/O Hubs.

Digital I/O Hub

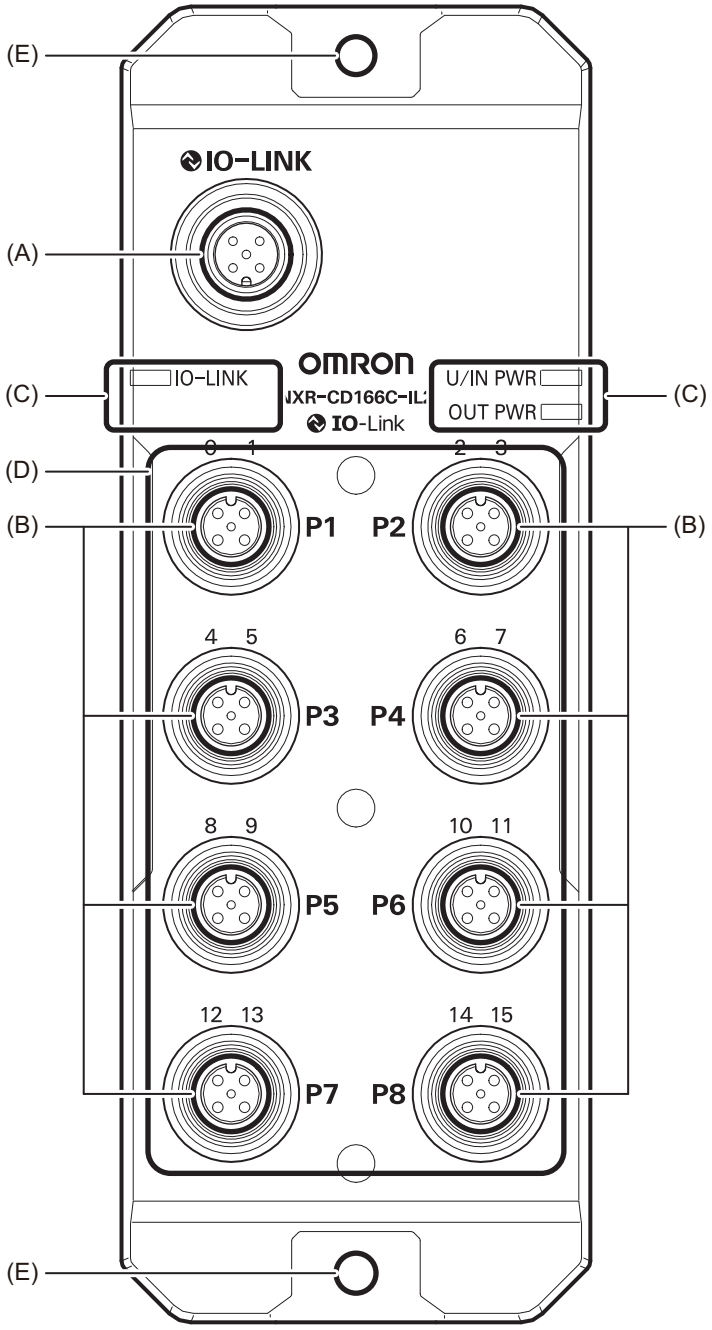

Letter	Name	Function
(A)	IO-Link connector	The connector for connecting the Hub to the IO-Link Master Unit. • M12 connector (A-coding, male) Connect an IO-Link cable. Applications: • IO-Link communications with the IO-Link Master Unit • Supplying the Unit/input power to the Digital I/O Hub*1 • Supplying the output power to the Digital I/O Variable Hub*1
(B)	I/O connectors	The connectors for connecting the Hub to the connected external devices. The connectors are called "ports". M12 connectors (A-coding, female) Connect I/O cables.
(C)	Status indicators	The indicators that show the current operating status of the Digital I/O Hub.
(D)	I/O indicators	The indicators that show the I/O status of pin 4/pin 1 and pin 2 for each port.
(E)	Hub mounting hole	The holes for mounting the Digital I/O Hub. They are provided in two locations. Mount the Hub with M5 screws.

*1. This is supplied from the IO-Link Master Unit through the IO-Link cable.

3-2 Indicators

This section describes the indicators on the IO-Link I/O Hubs.
Refer to *8-3 Checking for Errors and Troubleshooting with the Indicators* on page 8-6 for information on troubleshooting.

3-2-1 Status Indicators

Digital I/O Hub

The indicators depend on the types of Hubs.

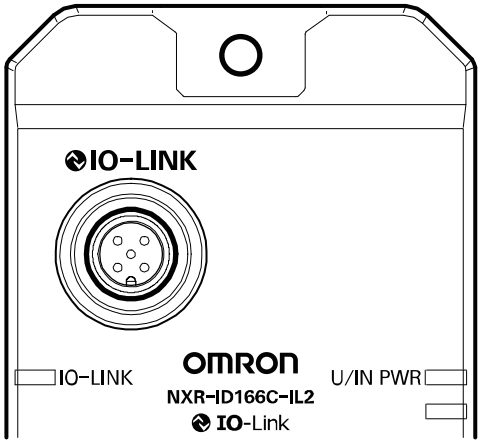

Digital Input Hub

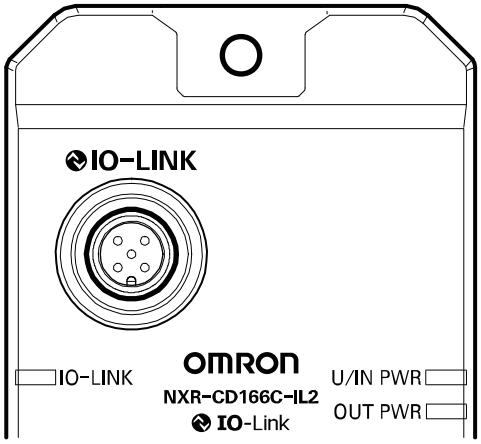

Digital I/O Variable Hub

● IO-Link Indicator

This indicator shows the status of IO-Link communications with the IO-Link Master Unit.

Color	Status		Description
Green		Flashing	The Hub is operating normally.
Red		Lit	One of the following error was detected. • Hardware Error • Service Data Error
		Flashing	IO-Link communications are not operating normally.
---		Not lit	• The IO-Link cable is not connected. • IO-Link communications are stopped. • The Unit/input power is not supplied.

● U/IN PWR Indicator

This indicator shows the status of the Unit/input power supply.

Color	Status		Description
Green		Lit	The Unit/input power is supplied.
---		Not lit	The Unit/input power is not supplied.

● OUT PWR Indicator

This indicator shows the status of the output power supply. The indicator is only mounted on the Digital I/O Variable Hub.

Color	Status		Description
Green		Lit	The output power is supplied.
---		Not lit	The output power is not supplied.

3-2-2 I/O Indicators

Digital I/O Hub

These indicators show the I/O status of the ports.

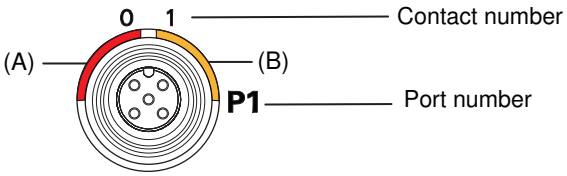

Example: I/O indicator for port 1

Letter	Name	Description
(A)	Pin 4/Pin 1 status indicator	This indicator shows the status of pin 4/pin 1 for each port. For each port, the contact numbers for digital input or digital output are given. Details are given below. P1: 0, P2: 2, P3: 4, P4: 6, P5: 8, P6: 10, P7: 12, P8: 14
(B)	Pin 2 status indicator	This indicator shows the status of pin 2 for each port. For each port, the contact numbers for digital input or digital output are given. Details are given below. P1: 1, P2: 3, P3: 5, P4: 7, P5: 9, P6: 11, P7: 13, P8: 15

The details of each indicator are given below.

● Pin 4/Pin 1 Status Indicator

The indicator shows the digital I/O status of pin 4 and an error occurring to pin 4 or pin 1.

Color	Status		Description	
Yellow		Lit	If pin 4 serves as an input	The input is ON
			If pin 4 serves as an output*1	The output is ON

Color	Status		Description	
Red		Flashing	If pin 4 or pin 2 serves as an input	One of the following errors occurred • Sensor Disconnected Error occurred to pin 1 • Sensor power supply short-circuit error occurred to pin 1
			If pin 4 serves as an output*1	One of the following errors occurred • External load disconnected error occurred to pin 4 • External load short-circuit error occurred to pin 4 • Sensor power supply short-circuit error occurred to pin 1
---		Not lit	If pin 4 serves as an input	The input is OFF
			If pin 4 serves as an output*1	The output is OFF

*1. The setting is only available with the Digital I/O Variable Hub.

● Pin 2 Status Indicator

The indicator shows the digital I/O status of pin 2 and an error occurring to pin 2.

Color	Status		Description	
Yellow		Lit	If pin 2 serves as an input	The input is ON
			If pin 2 serves as an output*1	The output is ON
Red		Flashing	If pin 2 serves as an output*1	One of the following errors occurred • External load disconnected error occurred to pin 2 • External load short-circuit error occurred to pin 2
---		Not lit	If pin 2 serves as an input	The input is OFF
			If pin 2 serves as an output*1	The output is OFF

*1. The setting is only available with the Digital I/O Variable Hub.

3-3 Connectors

This section describes the connectors of the IO-Link I/O Hubs.

3-3-1 IO-Link Connector

The IO-Link connector is used for connecting the Hub to the IO-Link Master Unit.

Digital I/O Hub

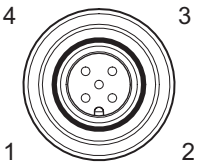

The specifications are as follows:

- Connector structure
  M12 connector (A-coding, male) × 1
- Pin arrangement

Pin No.	Signal name	Description
1	U/IN P+	Unit/input power supply +
2	• Digital Input Hub: NC • Digital I/O Variable Hub: OUT P+	• Digital Input Hub: Not used • Digital I/O Variable Hub: Output power supply +
3	• Digital Input Hub: U/IN P- • Digital I/O Variable Hub: U/IN P- and OUT P-	• Digital Input Hub: Unit/input power supply - • Digital I/O Variable Hub: Unit/input power supply - and output power supply -
4	C/Q	IO-Link data

3-3-2 I/O Connectors

The I/O connectors are used for connecting the Hub to the connected external devices.

Digital I/O Hub

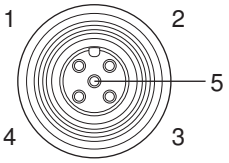

The specifications are as follows:

- Connector structure
  M12 connector (A-coding, female) × 8

- Pin arrangement

Pin No.	Pin name	Signal name	Description
1	Pin 1	V	Power supply +
2	Pin 2	• Digital Input Hub: I1, I3 to I15 • Digital I/O Variable Hub: IO1, IO3 to IO15	• Digital Input Hub: Input • Digital I/O Variable Hub: Input or output depending on the setting
3	Pin 3	G	Power supply -
4	Pin 4	• Digital Input Hub: I0, I2 to I14 • Digital I/O Variable Hub: IO0, IO2 to IO14	• Digital Input Hub: Input • Digital I/O Variable Hub: Input or output depending on the setting
5	---	NC	Not used

4

Designing the Power Supply System

This section describes how to design the power supply system for the NXR-series IO-Link I/O Hubs.

4-1 Power Supply Types and Power Supply System 4-2
4-1-1 Power Supply Types and Applications 4-2
4-1-2 Power Supply System 4-2
4-2 Designing the Power Supply System 4-4
4-2-1 Procedure for Designing the Power Supply System 4-4
4-2-2 Design Conditions for the Power Supply System 4-4
4-2-3 Calculating the Total Current Consumption 4-5
4-2-4 Calculating the Voltage Drop 4-7
4-3 Selecting the External Power Supply and Protective Devices 4-10

4-1 Power Supply Types and Power Supply System

This section describes the power supply types and applications and the power supply system for the IO-Link I/O Hubs.

4-1-1 Power Supply Types and Applications

This section describes the power supply types and applications for the IO-Link I/O Hubs.

Power Supply Types

There are the following two types of power supplies that supply power to the IO-Link I/O Hubs.

Power supply type	Description
Unit/input power supply	The Unit/input power supply provides power to the IO-Link I/O Hub for operation and interface with input devices. The power is supplied from the IO-Link Master Unit through the IO-Link cable to an IO-Link I/O Hub.
Output power supply	The output power supply provides power to the Digital I/O Variable Hub for interface with output devices. The power is supplied from the IO-Link Master Unit through the IO-Link cable to the Digital I/O Variable Hub.

Power Supply Applications

The applications of the power supplies are given below.

Power supply type	Description
Unit/input power supply	• Operation of the internal circuits and input circuits of an IO-Link I/O Hub • Power supply to input devices connected to an IO-Link I/O Hub • Input current from input devices connected to an IO-Link I/O Hub
Output power supply	• Drive of the output circuits of an IO-Link I/O Hub • Operation of the output devices connected to an IO-Link I/O Hub

4-1-2 Power Supply System

The power supply system for the IO-Link I/O Hubs is given below.
The Unit/input power and output power are supplied from the IO-Link Master Unit, which is connected to an external power supply, through the IO-Link cable to the IO-Link I/O Hub.
When the output power supplied to the Digital I/O Variable Hub, you must configure and operate the IO-Link Master Unit as shown below. The following configuration and operation supply the output power to the Digital I/O Variable Hub.

- Port setting
  Set pin 2 of the port of the IO-Link Master Unit, which is connected to the Digital I/O Variable Hub, to SIO (DO) Mode.

- IO-Link Master Unit Operation
  Supply the output power from the external power supply, and turn ON the output of pin 2 that you configured.

● Digital Input Hub

The Digital Input Hub does not require the output power to be supplied to the Hub.

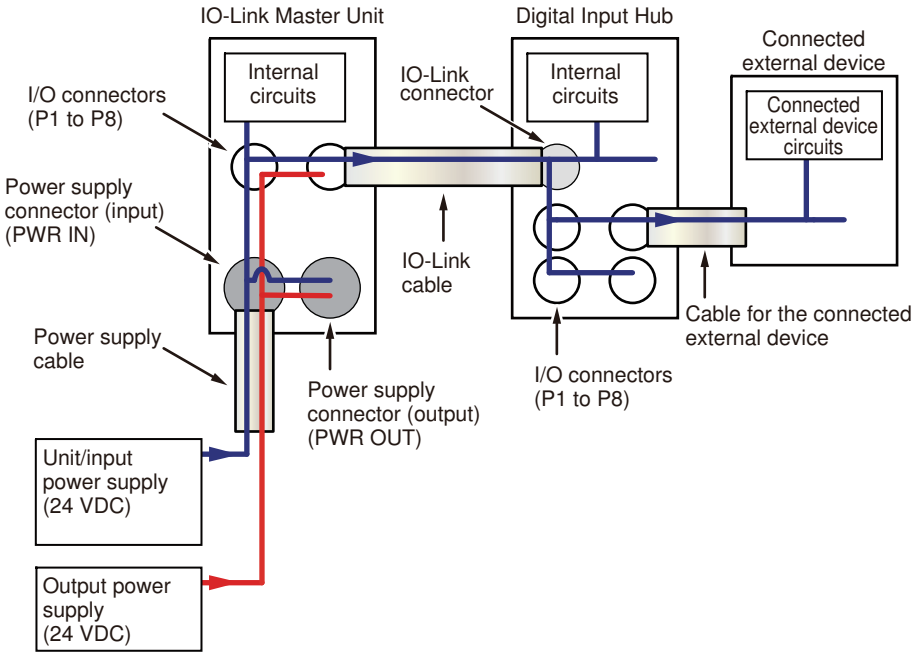

● Digital I/O Variable Hub

Set pin 2 of the port of the IO-Link Master Unit to SIO (DO) Mode, and turn on the output of pin 2. (See following figure (A).)

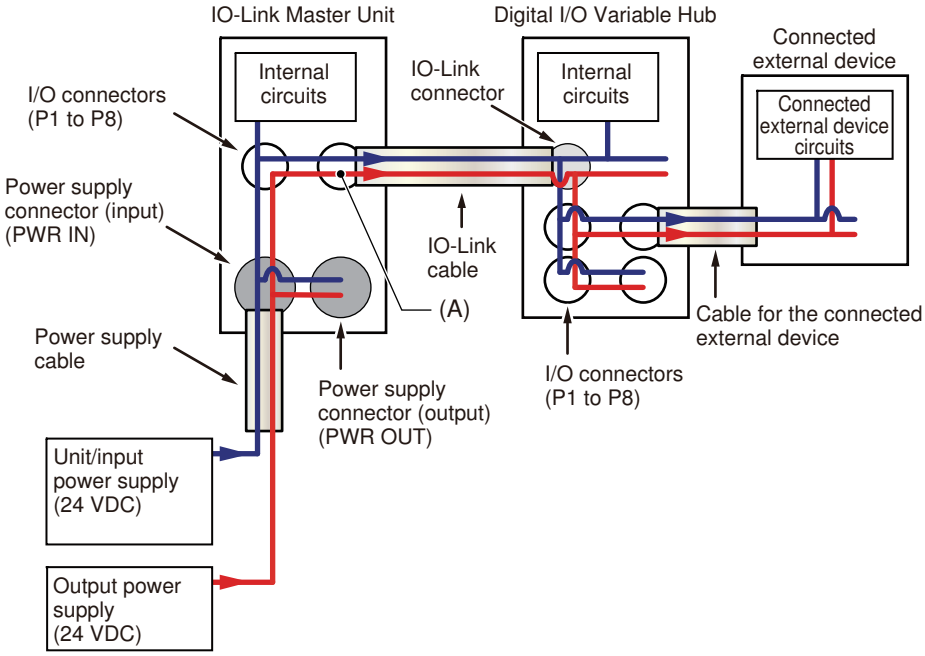

4-2 Designing the Power Supply System

This section describes how to design the power supply system for the IO-Link I/O Hubs.

⚠ WARNING

Make sure that the voltages and currents that are input to the Hubs are within the specified ranges.
Inputting voltages or currents that are outside of the specified ranges may cause accidents or fire.

4-2-1 Procedure for Designing the Power Supply System

The overall procedure for designing the power supply system for the IO-Link I/O Hubs is as follows.

Step	Description	Reference
1. Designing the Power Supply System	Perform the following design operations and confirm that they meet the design conditions. • Designing the Unit/input power supply • Designing the output power supply	*4-2-2 Design Conditions for the Power Supply System* on page 4-4
2. Selecting an External Power Supplies and Protective Devices	Calculate the power supply capacity from the current consumption calculated in step 1, and select external power supplies accordingly. In addition, select protective devices (e.g., breakers and fuses) to protect against short circuits and overcurrents in external circuits.	*4-3 Selecting the External Power Supply and Protective Devices* on page 4-10

4-2-2 Design Conditions for the Power Supply System

The design conditions for the power supply system for an IO-Link I/O Hub are given below.

Design condition	Reference for confirmation method
(a) The total current consumption from the Unit/input power supply must not exceed the maximum current of the IO-Link I/O Hub. *1	*4-2-3 Calculating the Total Current Consumption* on page 4-5
(b) The total current consumption from the output power supply must not exceed the maximum current of the IO-Link I/O Hub. *2	
(c) The input circuit specifications of IO-Link I/O Hub and the voltage specifications of connected external devices are met even if the Unit/input power supply voltage drops. *3	*4-2-4 Calculating the Voltage Drop* on page 4-7
(d) The output circuit specifications of the IO-Link I/O Hub and the voltage specifications of connected external devices are met even if the output power supply voltage drops. *4	

*1. For the Digital I/O Hubs, make sure that the total current consumption does not exceed 0.84 A, the maximum current of Unit/input power supply.
*2. For example, for the Digital I/O Variable Hub, make sure that the total current consumption does not exceed 2.0 A, the maximum current of output power supply.
*3. For example, for the Digital I/O Hubs, confirm that the Unit/input power supply voltage is 20.4 to 26.4 VDC.

*4. For example, for the Digital I/O Variable Hub, confirm that the output power supply voltage is 20.4 to 26.4 VDC.

4-2-3 Calculating the Total Current Consumption

The calculation methods for the total current consumption of the Digital I/O Hub from the Unit/input power supply and output power supply are given below.

● Total Current Consumption from Unit/Input Power Supply

= (Current consumption from Unit/input power supply) + (Current consumed between the Digital I/O Hub and input devices)

The items of the formula are described below.

Item	Description
Current consumption from Unit/input power supply	Current consumed by the Digital I/O Hub. Use the value of *current consumption from Unit/input power supply* specified in *2-1-2 Individual Specifications* on page 2-2.
Current consumed between the Digital I/O Hub and input devices	Use the following formula to calculate this value. (Sum of the currents consumed by the input devices) + (Input current to the Digital I/O Hub*1 × Number of inputs used)

*1. This corresponds to the *Input current* of *Digital input* specified in *2-1-2 Individual Specifications* on page 2-2.

● Total Current Consumption from Output Power Supply

= (Current consumption from output power supply) + (Current consumed between the Digital I/O Hub and output devices)

The items of the formula are described below.

Current consumption item	Description
Current consumption from output power supply	Current consumed by the Digital I/O Hub. Use the value of *current consumption from output power supply* specified in *2-1-2 Individual Specifications* on page 2-2.
Current consumed between the Digital I/O Hub and output devices	Use the following formula to calculate this value. (Load current × Number of outputs used)

Calculation Example for the Total Current Consumption

A calculation example of the total current consumption for the Digital I/O Variable Hub of the Digital I/O Hubs is given below.

● Application Conditions for Connected External Devices

The conditions for the Digital I/O Variable Hub and connected external devices are as follows:

Conditions for Digital I/O Variable Hub			Conditions for connected external device	
I/O connectors	Pin name	I/O function settings	Product name	Specification
Port 1 to port 5	Pin 4	Input (input current 4.0 mA)	Three-wire sensor	Current consumption: 30 mA
	Pin 2	Input (input current 4.0 mA)	Three-wire sensor	Current consumption: 30 mA
Port 6 to port 8	Pin 4	Output	Solenoid valve	Load current: 0.3 A
	Pin 2	Output	Solenoid valve	Load current: 0.3 A

● Calculating Current Consumption

The items to calculate for the total current consumptions from Unit/input power supply and output power supply are as follows.

Power supply type	Item to calculate for current consumption	Calculation result
Unit/input power supply	Current consumption from Unit/input power supply	40 mA according to the specifications of the Digital I/O Variable Hub.
	Current consumed between the Digital I/O Variable Hub and input devices	(Sum of the currents consumed by the input devices) + (Input current to the Digital I/O Variable Hub × Number of inputs used) = (30 mA × 10 points) + (4 mA × 10 points) = 0.34 A
Output power supply	Current consumption from output power supply	40 mA according to the specifications of the Digital I/O Variable Hub.
	Current consumed between the Digital I/O Variable Hub and output devices	(Load current × Number of outputs used) = 0.3 A × 6 points = 1.8 A

The results above give the total current consumption from Unit/input power supply and the total current consumption from output power supply below:

a. Total current consumption from Unit/input power supply
   = (Current consumption from Unit/input power supply) + (Current consumed between the Digital I/O Variable Hub and input devices)
   = 0.04 A + 0.34 A
   = 0.38 A
   This example is acceptable because the calculation result is below 0.84 A, the maximum current of Unit/input power supply.

b. Total current consumption from output power supply
   = (Current consumption from output power supply) + (Current consumed between the Digital I/O Variable Hub and output devices)
   = 0.04 A + 1.8 A
   = 1.84 A
   This example is acceptable because the calculation result is below 2.0 A, the maximum current of output power supply.

4-2-4 Calculating the Voltage Drop

The calculation methods for the voltage drop in the Unit/input power or the output power supplied from the IO-Link Master Unit are given below.

● Input Voltage to a Digital I/O Hub

= (Voltage of the external power supply connected to the IO-Link Master Unit) - (Voltage drop in the power supply cable and the IO-Link Master Unit) - (Voltage drop in the IO-Link cable)

● Input Voltage to Input Devices

= (Voltage of the external power supply connected to the IO-Link Master Unit) - (Voltage drop in the power supply cable and the IO-Link Master Unit) - (Voltage drop in the IO-Link cable)

● Input Voltage to Output Devices

= (Voltage of the external power supply connected to the IO-Link Master Unit) - (Voltage drop in the power supply cable and the IO-Link Master Unit) - (Residual voltage at the digital outputs for pin 2 of the IO-Link Master Unit) - (Voltage drop in the IO-Link cable) - (Residual voltage at the digital output of the Digital I/O Hub)

The items of the formula are described below.

Item	Description
Voltage of the external power supply connected to the IO-Link Master Unit	This is a voltage of the external power supply connected to the IO-Link Master Unit. Refer to the *NXR-series IO-Link Master Unit for EtherNet/IP User's Manual (Cat. No. W619)* or *NXR-series IO-Link Master Unit for EtherCAT User's Manual (Cat. No. W640)* for details.
Voltage drop in the power supply cable and the IO-Link Master Unit	This is a voltage drop in the power supply cable connected to the IO-Link Master Unit and in the IO-Link Master Unit. Refer to the *NXR-series IO-Link Master Unit for EtherNet/IP User's Manual (Cat. No. W619)* or *NXR-series IO-Link Master Unit for EtherCAT User's Manual (Cat. No. W640)* for details.
Residual voltage at the digital outputs for pin 2 of the IO-Link Master Unit	This is a residual voltage at the digital outputs for pin 2 of the IO-Link Master Unit. Refer to the *NXR-series IO-Link Master Unit for EtherNet/IP User's Manual (Cat. No. W619)* or *NXR-series IO-Link Master Unit for EtherCAT User's Manual (Cat. No. W640)* for details.
Voltage drop in the IO-Link cable	This is a voltage drop in the IO-Link cable. The voltage drop in the IO-Link cable is determined by the following items: • Sum of the total current consumptions from Unit/input power supply and output power supply • IO-Link cable length Refer to *Values of Voltage Drop in the IO-Link Cable* on page 4-7 below for voltage drop values.
Residual voltage at the digital output of the Digital I/O Hub	This is a residual voltage that occurs when you turn ON the digital output of the Digital I/O Hub. Use the value of *Residual voltage* specified in *2-1-2 Individual Specifications* on page 2-2.

● Values of Voltage Drop in the IO-Link Cable

Sum of total current consumptions from Unit/input power supply and output power supply (A)	Voltage drop for each IO-Link cable length (V)					
	1 m	2 m	3 m	5 m	10 m	20 m
3	0.60	0.96	1.20	1.68	2.88	5.28
2	0.40	0.64	0.80	1.12	1.92	3.52

Sum of total current consumptions from Unit/input power supply and output power supply (A)	Voltage drop for each IO-Link cable length (V)					
	1 m	2 m	3 m	5 m	10 m	20 m
1	0.20	0.32	0.40	0.56	0.96	1.76
0.5	0.10	0.16	0.20	0.28	0.48	0.88

Design the system so that the voltage specifications of the IO-Link I/O Hub and connected external devices are met even if the voltage of the Unit/input power supply and output power supply drops. The following shows an example of calculation. Follow the procedure described in this example to calculate voltage drop.

Calculation Example for Voltage Drop

The following example explains how to calculate voltage drop under the following conditions.

● Configuration Example

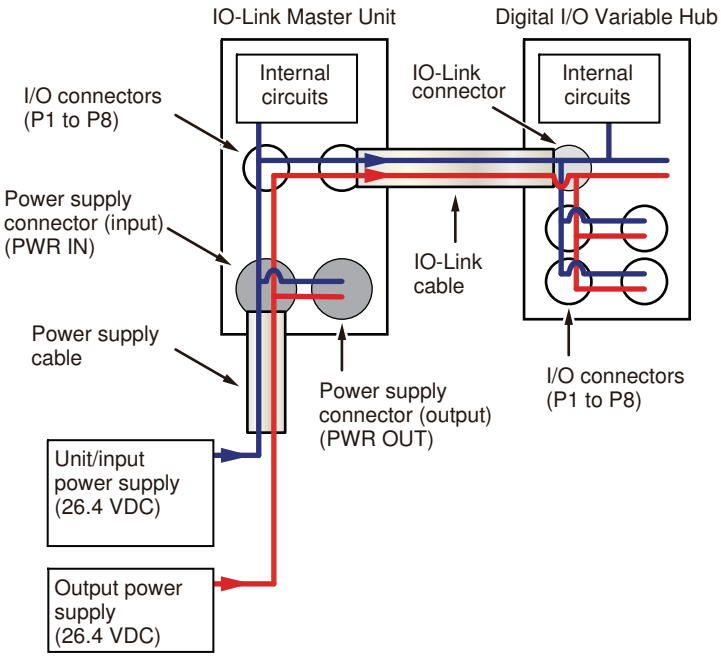

● Conditions

Item	Conditions
Application conditions for connected external devices	Use the conditions specified in *Calculation Example for the Total Current Consumption* on page 4-5 in *4-2-3 Calculating the Total Current Consumption* on page 4-5. The conditions lead to the total current consumption from Unit/input power supply and the total current consumption from output power supply below: • Total current consumption from Unit/input power supply: 0.38 A • Total current consumption from output power supply: 1.84 A This gives 2.22 A as the sum of total current consumptions from Unit/input power supply and output power supply.
Voltage of the external power supply connected to the IO-Link Master Unit	• Unit/input power supply: 26.4 VDC • Output power supply: 26.4 VDC

Item	Conditions
Voltage drop in the power supply cable and the IO-Link Master Unit	Calculate while assuming that the sum of voltage drops in the power supply cable and the IO-Link Master Unit is 0.51 V.
Residual voltage at the digital outputs for pin 2 of the IO-Link Master Unit	1.5 V
IO-Link cable length	1 m
Voltage specifications of the Digital I/O Variable Hub	• Unit/input power supply: 20.4 to 26.4 VDC • Output power supply: 20.4 to 26.4 VDC
Voltage specifications of connected external devices	• Input device: 20.4 to 26.4 VDC • Output device: 20.4 to 26.4 VDC

● Calculation Method

Calculate the input voltages of the Unit/input power supply and output power supply for the Digital I/O Variable Hub, input devices, and output devices. The sum of the total current consumptions from Unit/input power supply and output power supply is 2.22 A and the length of the IO-Link cable is 1 m. Therefore, based on the value for 3 A in the table of voltage drops for the IO-Link cable, the applicable voltage drop is 0.60 V. Accordingly, input voltages to the Digital I/O Variable Hub, input devices, and output devices are as follows:

a. Input voltage to the Digital I/O Variable Hub
= (Voltage of the external power supply connected to the IO-Link Master Unit) - (Voltage drop in the power supply cable and the IO-Link Master Unit) - (Voltage drop in the IO-Link cable)
= 26.4 V - 0.51 V - 0.60 V
= 25.29 V

b. Input voltage to input devices
= (Voltage of the external power supply connected to the IO-Link Master Unit) - (Voltage drop in the power supply cable and the IO-Link Master Unit) - (Voltage drop in the IO-Link cable)
= 26.4 V - 0.51 V - 0.60 V
= 25.29 V

c. Input voltage to output devices
= (Voltage of the external power supply connected to the IO-Link Master Unit) - (Voltage drop in the power supply cable and the IO-Link Master Unit) -(Residual voltage at the digital outputs for pin 2 of the IO-Link Master Unit) - (Voltage drop in the IO-Link cable) - (Residual voltage at the digital output of the Digital I/O Variable Hub)
= 26.4 V - 0.51 V - 1.5 V - 0.60 V - 1.2 V
= 22.59 V
The calculation results are acceptable because they meet the voltage specifications of the Digital I/O Variable Hub, input devices, and output devices. If the calculation results do not meet the voltage specifications, review the length of the IO-Link cable and the connected external devices.

4-3 Selecting the External Power Supply and Protective Devices

The IO-Link Master Unit supplies power to the IO-Link I/O Hubs. Refer to the *NXR-series IO-Link Master Unit for EtherNet/IP User's Manual (Cat. No. W619)* or *NXR-series IO-Link Master Unit for EtherCAT User's Manual (Cat. No. W640)*, and select the external power supply and protective devices.

5

Installation and Wiring

This section describes how to install and wire the NXR-series IO-Link I/O Hub.

5-1 Installing Hubs 5-2
- 5-1-1 Installation Precautions 5-2
- 5-1-2 Installation Orientations 5-2
- 5-1-3 Installation Method 5-2

5-2 Wiring IO-Link Cable and I/O Cables 5-4
- 5-2-1 Installation Precautions 5-4
- 5-2-2 Preparing for Wiring 5-4
- 5-2-3 Connecting IO-Link Cable 5-5
- 5-2-4 Connecting I/O Cables 5-7
- 5-2-5 Tightening Torque 5-10
- 5-2-6 Waterproof Covers 5-10

5-3 Wiring Example for I/O Connectors 5-11

5-4 Connected Devices 5-16
- 5-4-1 IO-Link Connector Cable 5-16
- 5-4-2 I/O Cables 5-16
- 5-4-3 Waterproof Cover for Connectors 5-17

5-1 Installing Hubs

This section describes how to install the IO-Link I/O Hub.

5-1-1 Installation Precautions

To increase the reliability of the IO-Link I/O Hub and take complete advantage of its functionality, observe the following precautions.

Do not install the IO-Link I/O Hub in the following locations.
- Locations subject to direct sunlight
- Locations subject to temperatures or humidity outside the range specified in the specifications
- Locations subject to condensation as the result of severe changes in temperature
- Locations subject to corrosive or flammable gases
- Locations subject to dust (especially iron dust) or salts
- Locations subject to exposure to acid, oil, or chemicals
- Locations subject to shock or vibration
- Locations close to power lines.

Take appropriate and sufficient countermeasures during installation in the following locations.
- Locations subject to static electricity or other forms of noise
- Locations subject to strong electromagnetic fields
- Locations subject to possible exposure to radioactivity
- Locations close to power supply lines

5-1-2 Installation Orientations

The IO-Link I/O Hub can be installed in any of the following six orientations.

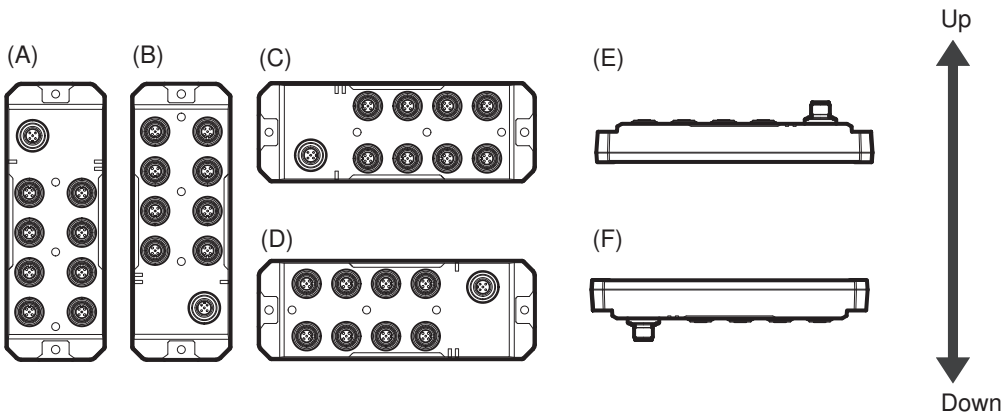

5-1-3 Installation Method

When you install an IO-Link I/O Hub, secure the Hub from the two Hub mounting holes with screws. The Hub mounting holes are provided at the top and the bottom of the Hub. Refer to *2-2 Dimensions* on page 2-7 for details on the installation dimensions.

Tighten the M5 screws to the following torque.

Tightening locations	Screw size	Tightening torque range
Hub mounting holes	M5	1.47 to 1.96 N·m

Precautions for Correct Use

- Install the Hub properly. The Hub may be affected by vibration if it is not installed properly, which may cause failure.
- Do not allow oil to adhere to the screws. Oil adhesion may damage the screws.
- Tighten the screws with an appropriate screwdriver. Tightening a screw with an inappropriate screwdriver may damage the screw.

5-2 Wiring IO-Link Cable and I/O Cables

This section describes how to wire the IO-Link cable and I/O cables for the IO-Link I/O Hubs.

5-2-1 Installation Precautions

Basic precautions for the installation of IO-Link cable and I/O cables are provided below.

- To maintain the IP65/IP67 protective structure of the IO-Link I/O Hub, tighten the screw connector of each cable shown in *5-4 Connected Devices* on page 5-16 to the specified tightening torque when you connect the cables to the IO-Link connector and I/O connectors.
- To maintain the IP65/IP67 protective structure of the IO-Link I/O Hub, tighten the waterproof cover shown in *5-4 Connected Devices* on page 5-16 to the specified tightening torque to the unused I/O connectors.
- Do not lay the cables in locations subject to high temperatures or high humidity.
- Do not lay the cables in locations subject to excessive dust, oil mist, or other contaminants.
- There are limitations on the bending radius of the cables. Check the specifications of the cables for their bending radius.

5-2-2 Preparing for Wiring

● Preparing IO-Link Cable

For the IO-Link cable, use the IO-Link connector cable shown in *5-4 Connected Devices* on page 5-16.
Refer to *5-4-1 IO-Link Connector Cable* on page 5-16 for details.

● Preparing I/O Cables

For I/O cables, use the I/O cables shown in *5-4 Connected Devices* on page 5-16.
Refer to *5-4-2 I/O Cables* on page 5-16 for details.

● Preparing Tightening Tools

Use the following tools to tighten the M12 screw connectors of the IO-Link cable and I/O cables to a specified torque.

Name and appearance	Manufacturer	Model
• M12 torque handle Product, setting aid for torque 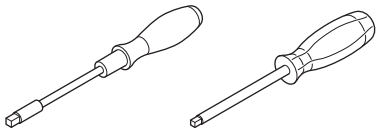 • M12 attachment 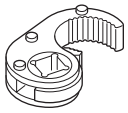	Weidmuller	Screwty M12-DM*1

*1. The model is a set of an M12 torque handle and an M12 attachment.

5-2-3 Connecting IO-Link Cable

This section describes procedures for connecting and disconnecting an IO-Link cable.

Procedure for Connecting an IO-Link Cable

Use the following procedures to connect an I/O-Link cable. Turn OFF the Unit/input power supply and output power supply to the IO-Link Master Unit before you connect the IO-Link cable.

1 Push the M12 socket (female) of the IO-Link cable into the IO-Link connector (male) of the IO-Link I/O Hub. At this time, be careful of the orientation of the IO-Link connector.

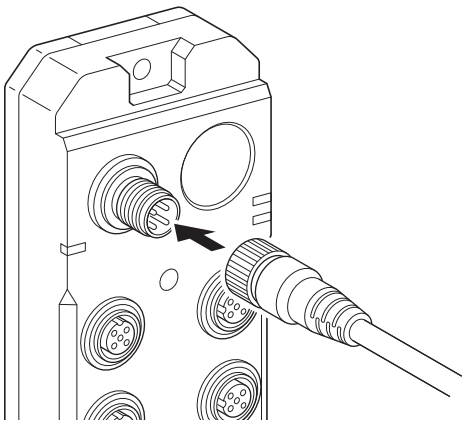

2 Rotate the M12 screw connector of the IO-Link cable in the direction shown in the following figure to tighten it. Tighten the connector before tightening it to the specified torque.

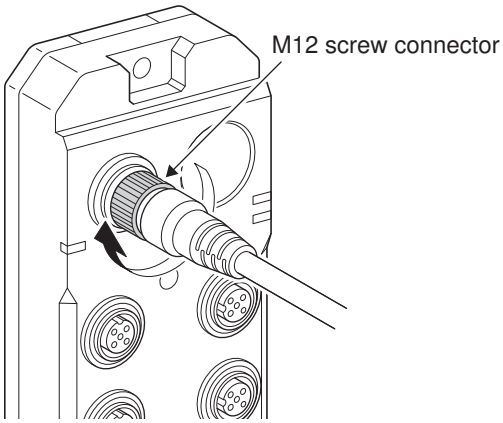

3 Set the M12 torque handle to the specified torque. Then, insert the torque handle into the tightening hole of the M12 attachment. When you tighten the connector, place the M12 attachment in the orientation shown in the following figure and insert the torque handle.
Refer to *5-2-5 Tightening Torque* on page 5-10 for information on the specified torque.

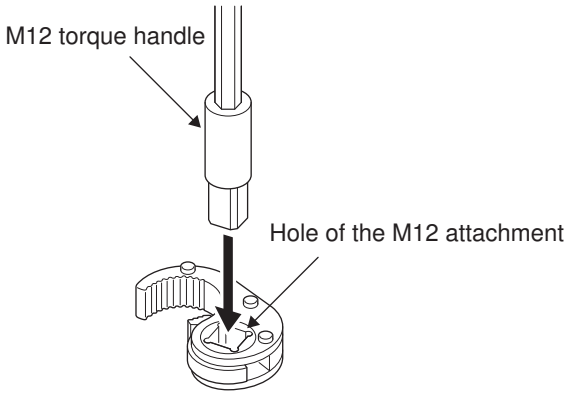

4 Mount the M12 attachment on the M12 screw connector of the IO-Link cable. After you mount the M12 attachment, rotate the M12 torque handle in the direction shown in the following figure to tighten the M12 screw connector to the specified torque.

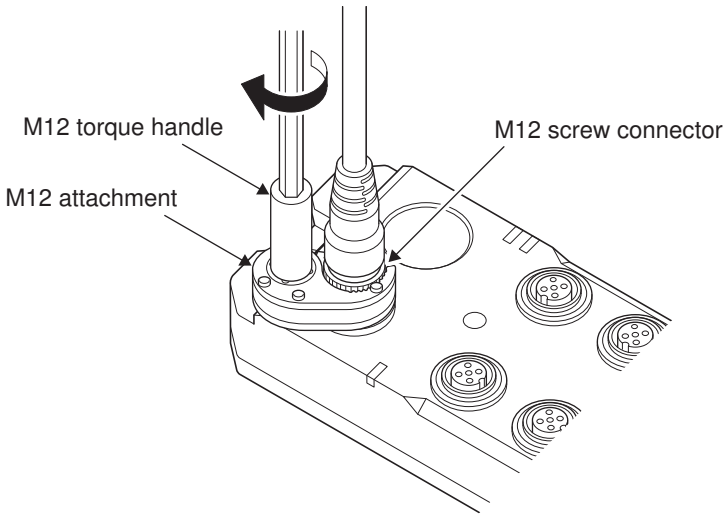

Procedure for Disconnecting an IO-Link Cable

Use the following procedures to disconnect an I/O-Link cable. Turn OFF the Unit/input power supply and output power supply to the IO-Link Master Unit before you remove the IO-Link cable.

1 Insert the M12 torque handle into the tightening hole of the M12 attachment. When you remove the connector, place the M12 attachment upside down, that is, in the opposite orientation to that for tightening.

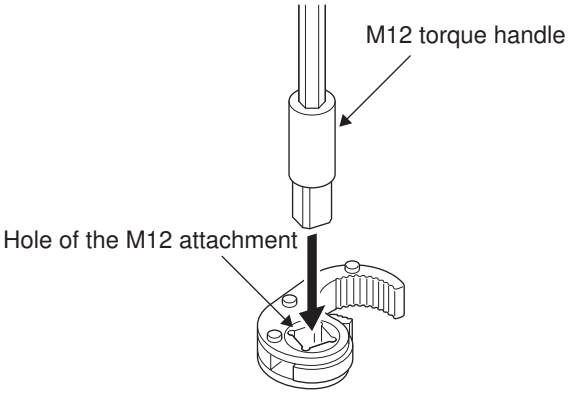

2 Mount the M12 attachment on the M12 screw connector of the IO-Link cable. After you mount the M12 attachment, rotate the M12 torque handle in the direction shown in the following figure to loosen the M12 screw connector.

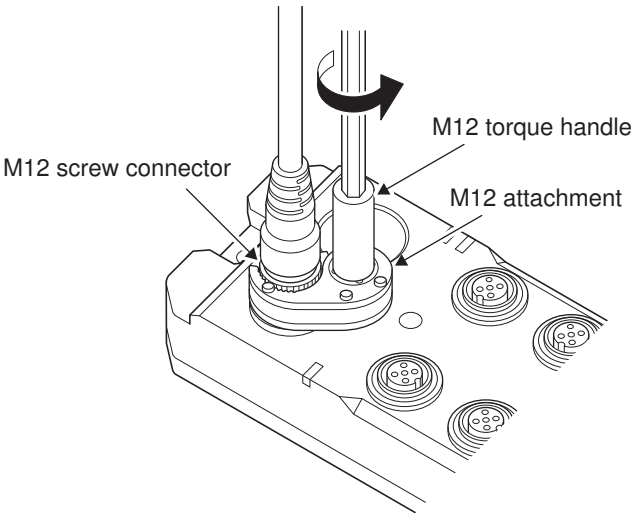

3 Rotate the M12 screw connector of the IO-Link cable in the direction opposite to the connection direction.

5-2-4 Connecting I/O Cables

This section describes procedures for connecting and disconnecting I/O cables.

Procedure for Connecting an I/O Cable

Use the following procedures to connect an I/O cable. Turn OFF the Unit/input power supply and output power supply to the IO-Link Master Unit before you connect the I/O cable.

1 Push the M12 plug (male) of the I/O cable into the I/O connector (female) of the IO-Link I/O Hub. At this time, be careful of the orientation of the I/O connector.

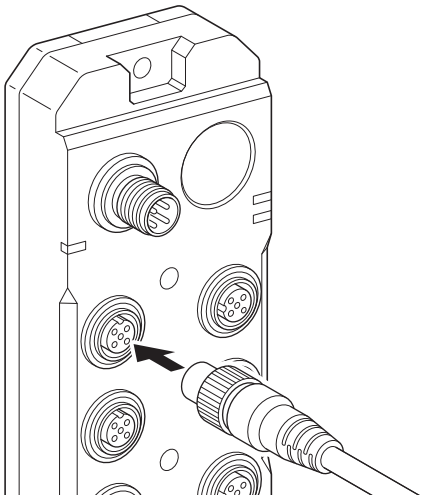

2 Rotate the M12 screw connector of the I/O cable in the direction shown in the following figure to tighten it. Tighten the connector before tightening it to the specified torque.

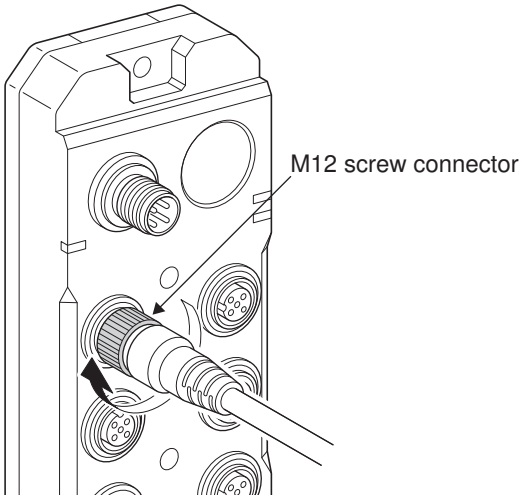

3 Set the M12 torque handle to the specified torque. Then, insert the torque handle into the tightening hole of the M12 attachment. When you tighten the connector, place the M12 attachment in the orientation shown in the following figure and insert the torque handle.
Refer to *5-2-5 Tightening Torque* on page 5-10 for information on the specified torque.

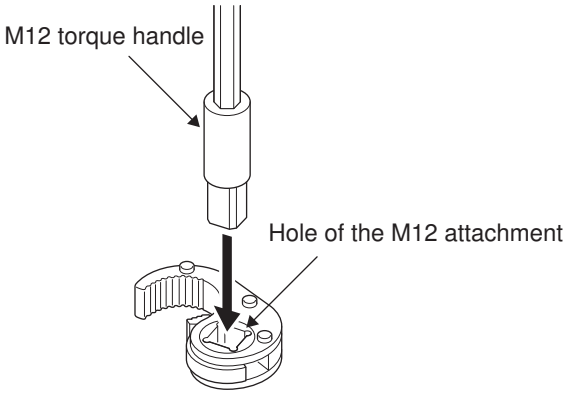

4 Mount the M12 attachment on the M12 screw connector of the I/O cable. After you mount the M12 attachment, rotate the M12 torque handle in the direction shown in the following figure to tighten the M12 screw connector to the specified torque.

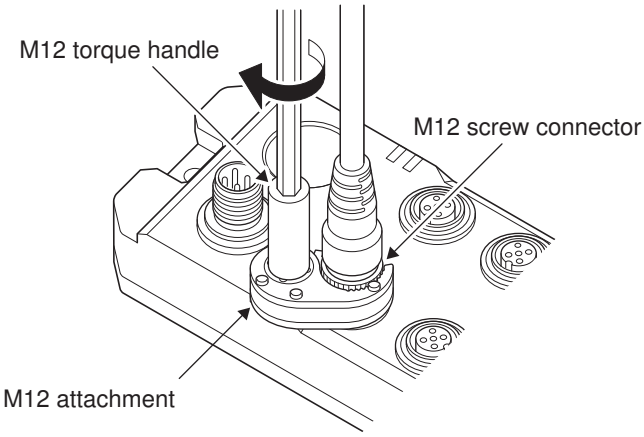

Procedure for Disconnecting an I/O Cable

Use the following procedures to disconnect an I/O cable. Turn OFF the Unit/input power supply and output power supply to the IO-Link Master Unit before you remove an I/O cable.

1 Insert the M12 torque handle into the tightening hole of the M12 attachment. When you remove the connector, place the M12 attachment upside down, that is, in the opposite orientation to that for tightening.

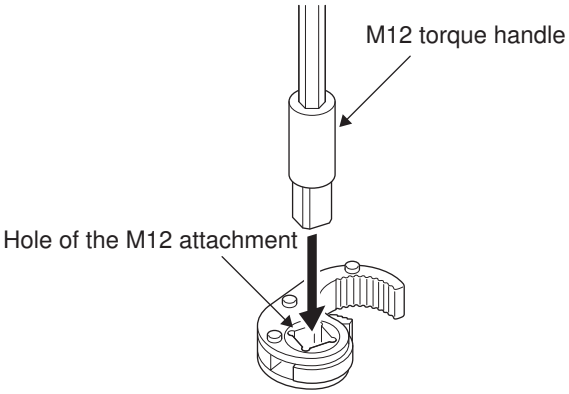

2 Mount the M12 attachment on the M12 screw connector of the I/O cable. After you mount the M12 attachment, rotate the M12 torque handle in the direction shown in the following figure to loosen the M12 screw connector.

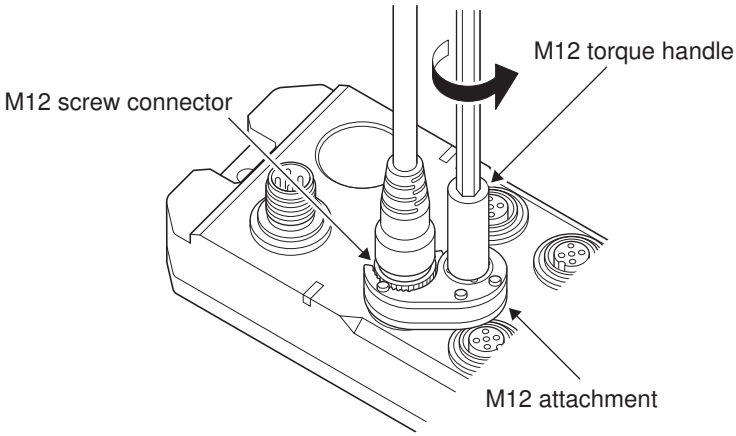

3 Rotate the M12 screw connector of the I/O cable in the direction opposite to the connection direction.

5-2-5 Tightening Torque

Tighten the M12 screw connectors of the IO-Link cable and I/O cables to the following torque. You can maintain the IP65/IP67 protective structure when the screw connectors are tightened to a suitable tightening torque.

Tightening location	Screw size	Tightening torque
IO-Link connector	M12	0.5 to 0.6 N·m
I/O connectors		

5-2-6 Waterproof Covers

Install waterproof covers for I/O connectors on any unused I/O connectors. Refer to *5-4-3 Waterproof Cover for Connectors* on page 5-17 for details on the waterproof covers for I/O connectors.
Tighten the waterproof covers to the following torque.
You can maintain the IP65/IP67 protective structure when the waterproof covers are tightened to a suitable tightening torque.

Tightening location	Screw size	Tightening torque
Waterproof covers for I/O connectors (M12 waterproof covers)	M12	0.5 to 0.6 N·m

5-3 Wiring Example for I/O Connectors

Wiring examples for connecting the following external devices to the I/O connectors on the Digital I/O Hub are given below.

- Two-wire sensor
- Three-wire sensor
- Output device

Wring examples with a branch connector are also shown.

Precautions for Correct Use

If you make the following setting to pin 2 and pin 4 of the port for the Digital I/O Variable Hub and connect the Hub with external devices, use the external devices without protective diodes in the locations shown in the following figure.

- Pin 4: Output, Pin 2: Input
- Pin 4: Input, Pin 2: Output

If the connected external devices have protective diodes, change them to those with built-in reverse current prevention diodes as shown in the following figure, or externally install reverse current prevention diodes.

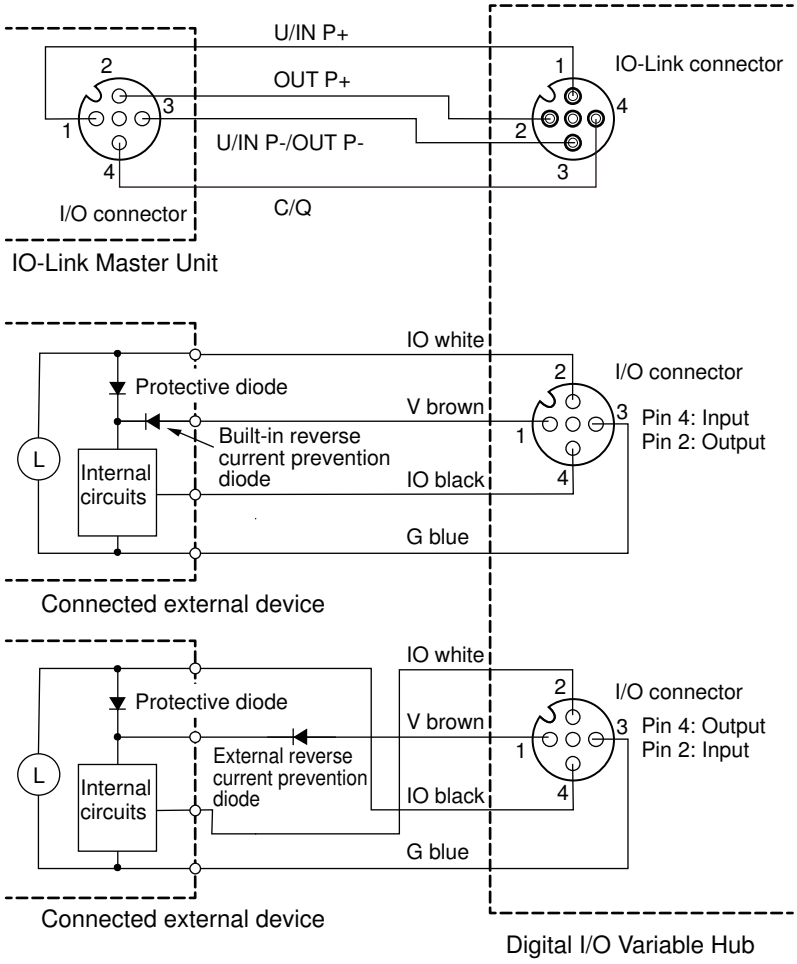

If the connected external devices have protective diodes, reverse current flows due to a difference between the Unit/input power supply and the output power supply as shown in the figure below, which may result in failure or malfunction of the product or connected external devices.

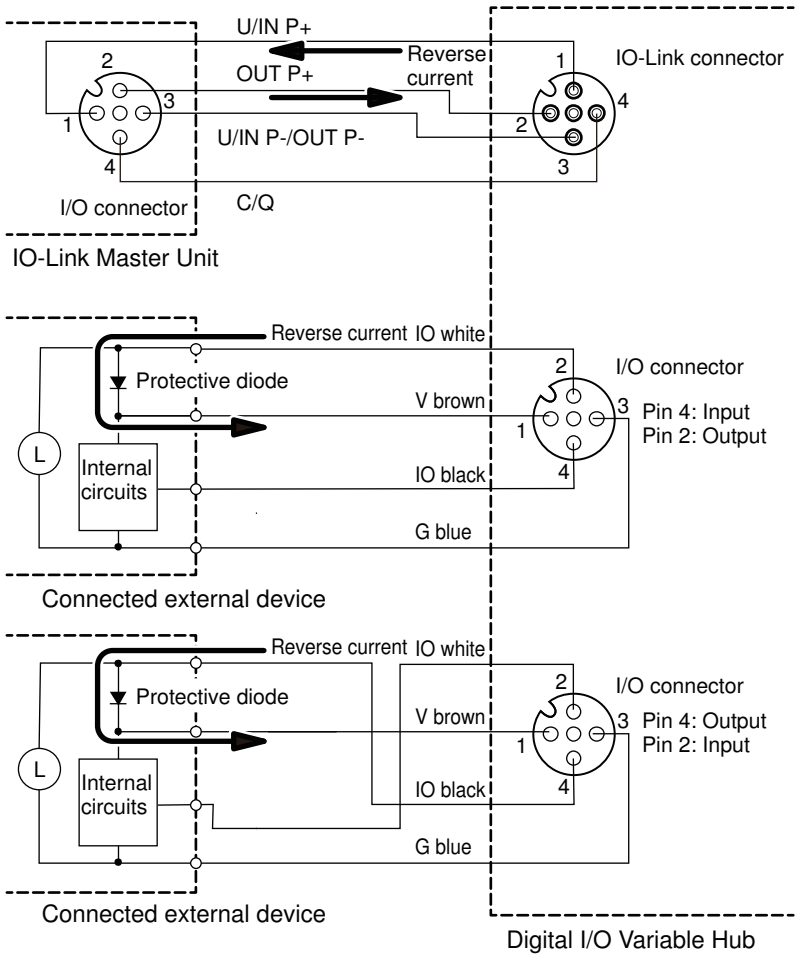

Wiring Example for Two-wire Sensors

A wiring example for a 2-wire sensor to an input of the Digital I/O Hub is given below.
In this example, pin 4 of port 1 serves as an input.

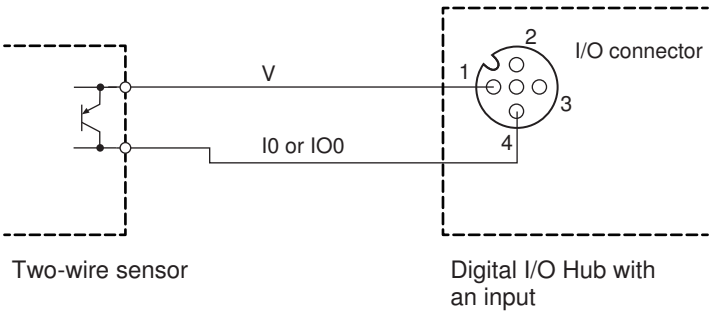

The power +(V) to pin 1 is supplied from the IO-Link Master Unit through the IO-Link cable to the Digital I/O Hub.

Wiring Example for Three-wire Sensors

A wiring example for a 3-wire sensor to an input of the Digital I/O Hub is given below.
In this example, pin 4 of port 1 serves as an input.

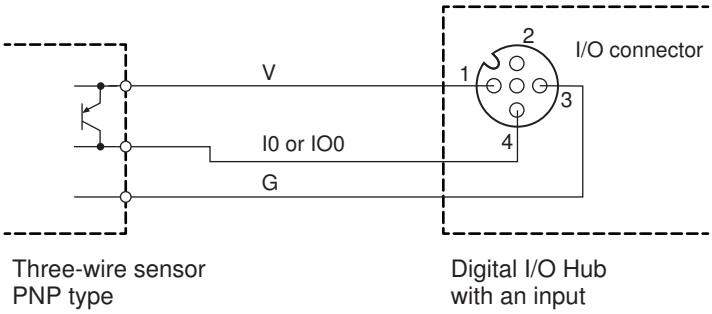

The power +(V) to pin 1 is supplied from the IO-Link Master Unit through the IO-Link cable to the Digital I/O Hub.

Wiring Example for an Output Device

A wiring example for output device to an output of the Digital I/O Hub is given below.
In this example, pin 4 of port 1 serves as an output.

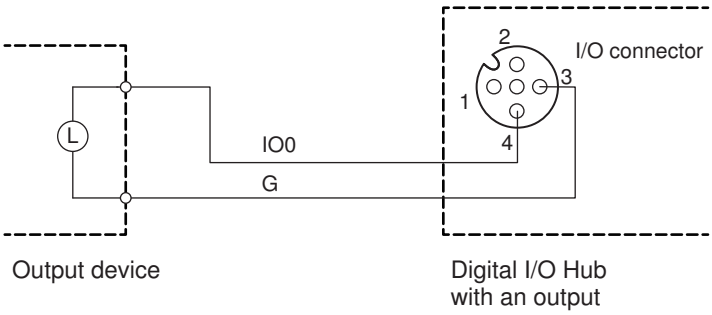

The output power that provides load current is supplied from the IO-Link Master Unit through the IO-Link cable to the Digital I/O Hub.

Precautions for Correct Use

If you use a inductive load (solenoid valve, etc.), use a device with built-in diodes for absorbing counter-electromotive force, or externally install the diodes. Refer to *A-3 Wiring Precautions for External Output Signal Lines* on page A-5 for details.

Wiring Examples with a Branch Connector

Wiring examples of using a branch connector to connect two or more external devices to a port are shown below.
Use the following branch connector.

- XS5R-D426-1 (OMRON)

Refer to *Branch Connector for I/O Connectors* on page 5-17 in *5-4-2 I/O Cables* on page 5-16 for details on the branch connector.

● Wiring Example for a Two-wire Sensor and Three-wire Sensor

In this example, pin 4 and pin 2 of port 1 serve as inputs.

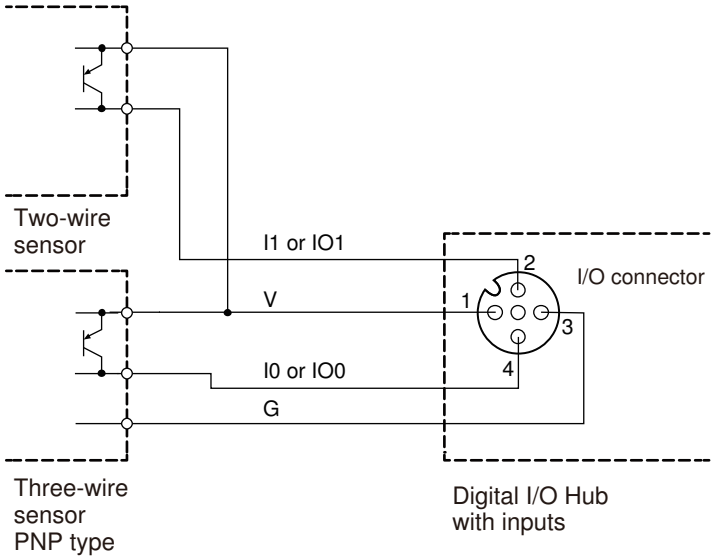

The power +(V) to pin 1 is supplied from the IO-Link Master Unit through the IO-Link cable to the Digital I/O Hub.

● Wiring Example for an Output Device and Three-wire Sensor

This wiring example shows the Digital I/O Variable Hub whose pin 4 of port 1 serves as an output and whose pin 2 of port 1 serves as an input.

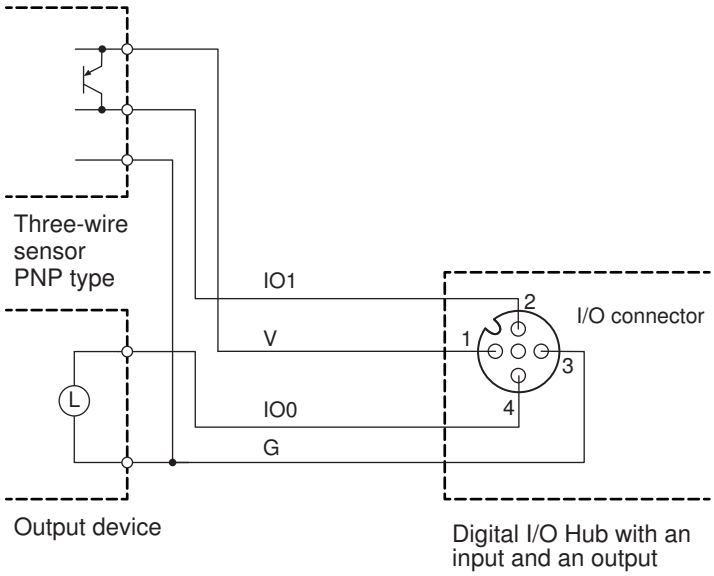

The power +(V) to pin 1 is supplied from the IO-Link Master Unit through the IO-Link cable to the Digital I/O Hub. The output power that provides load current is supplied from the IO-Link Master Unit through the IO-Link cable to the Digital I/O Hub.

Precautions for Correct Use

If you use a inductive load (solenoid valve, etc.), use a device with built-in diodes for absorbing counter-electromotive force, or externally install the diodes. Refer to *A-3 Wiring Precautions for External Output Signal Lines* on page A-5 for details.

5-4 Connected Devices

This section provides connected devices for wiring the IO-Link I/O Hubs.

5-4-1 IO-Link Connector Cable

This cable is used to connect a Hub to an M12 plug of the IO-Link Master Unit.
Details are given below.

Name and appearance	Manufacturer	Specification	Number of cable conductors	Available connectors	Cable connection direction	Cable length	Model
XS2W Connector with Cable (M12 socket/M12 plug) 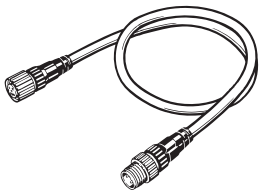	OMRON Corporation	M12 socket (A-coding, female) to M12 plug (A-coding, male), uses DC	4	Screw connector	Straight/ straight	1 m	XS2W-D421-C81-F
						2 m	XS2W-D421-D81-F
						3 m	XS2W-D421-E81-F
						5 m	XS2W-D421-G81-F
						10 m	XS2W-D421-J81-F

5-4-2 I/O Cables

● Conversion Cable

The following cable converts connections with an IO-Link I/O Hub and an M8 plug of a connected external device.

Name and appearance	Manufacturer	Specification	Number of cable conductors	Available connectors	Cable connection direction	Cable length	Model
XS3W Connector with Cable (M8 socket/M12 plug)	OMRON Corporation	M8 socket (A-coding, female) to M12 plug (A-coding, male), uses DC	4	M8 screw connector M12 Smartclick connector*1	Straight	0.2 m	XS3W-M42C-4C2-A

*1. I/O connectors for the IO-Link I/O Hubs are not Smartclick connectors. Use I/O cable tightening tools to install this cable. The Smartclick connector of I/O cables also serves as a screw connector.

● Direct Connection or Extension Cables

This cable is used for direct connection with connected external devices with an M12 plug. This cable is also used as extension cables from connected external devices with an M12 plug.
Use the cable introduced in IO-Link Connector Cable. Refer to *5-4-1 IO-Link Connector Cable* on page 5-16 for details on the cable.

● Branch Connector for I/O Connectors

This is a branch connector. Details are given below.

Name and appearance	Manufacturer	Specification	Number of cable conductors	Available connectors	Cable connection direction	Cable length	Model
XS5R Y-Joint Plug/Socket Connector 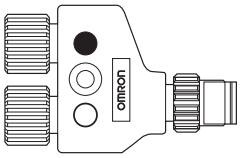	OMRON Corporation	M12	---	Smartclick connector*1	---	---	XS5R-D426-1

*1. I/O connectors for the IO-Link I/O Hubs are not Smartclick connectors. Use I/O cable tightening tools to install this cable. The Smartclick connector of the branch connector also serves as a screw connector.

The wiring diagram is shown below.

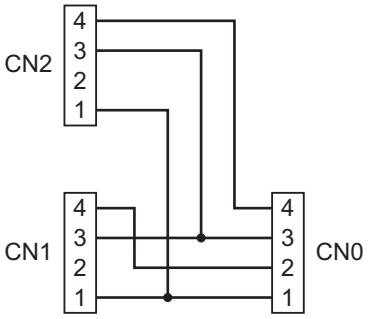

5-4-3 Waterproof Cover for Connectors

This is a waterproof cover for unused M12 connectors.
When you use this waterproof cover, you can maintain the IP65/IP67 protective structure.
You can connect an M12 waterproof cover to an I/O connector.

Details are given below.

Name and appearance	Manufacturer	Specification	Available connectors	Model
M12 Waterproof Cover 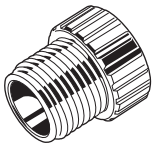	OMRON Corporation	M12	Screw connector	XS2Z-22

6

Process Data and Service Data

This section describes process data and service data of the NXR-series IO-Link I/O Hubs.

6-1 Process Data 6-2
6-1-1 Digital Input Hub 6-2
6-1-2 Digital I/O Variable Hub 6-4
6-2 Service Data 6-9
6-2-1 Digital I/O Hub 6-9

6-1 Process Data

This section describes the process data of each type of IO-Link I/O Hubs.

6-1-1 Digital Input Hub

The Digital Input Hub has only process input data.

Process Input Data of Digital Input Hub

The data structure is shown below.

	Bit							
	7	6	5	4	3	2	1	0
PD0	Input Data							
PD1								
PD2	Smart Status							
PD3								
PD4	Port1 Status							
PD5								
PD6	Port2 Status							
PD7								
PD8	Port3 Status							
PD9								
PD10	Port4 Status							
PD11								
PD12	Port5 Status							
PD13								
PD14	Port6 Status							
PD15								
PD16	Port7 Status							
PD17								
PD18	Port8 Status							
PD19								

The following describes each data in detail.
The value 1 indicates TRUE and 0 indicates FALSE.

● Input Data

The data indicate the input status of each port.

PD	Bit	Assignment	Description
PD0	0	Port1 Pin4 Input Bit	1: The relevant input is ON. 0: The relevant input is OFF.
	1	Port1 Pin2 Input Bit	
	2	Port2 Pin4 Input Bit	
	3	Port2 Pin2 Input Bit	
	4	Port3 Pin4 Input Bit	
	5	Port3 Pin2 Input Bit	
	6	Port4 Pin4 Input Bit	
	7	Port4 Pin2 Input Bit	
PD1	0	Port5 Pin4 Input Bit	1: The relevant input is ON. 0: The relevant input is OFF.
	1	Port5 Pin2 Input Bit	
	2	Port6 Pin4 Input Bit	
	3	Port6 Pin2 Input Bit	
	4	Port7 Pin4 Input Bit	
	5	Port7 Pin2 Input Bit	
	6	Port8 Pin4 Input Bit	
	7	Port8 Pin2 Input Bit	

● Smart Status

The data indicate the statuses of the Hub and each port.

PD	Bit	Assignment	Description
PD2	0	Unit/Input Power Supply Voltage Drop Detection Bit	1: The Unit/input power supply voltage is below the monitored voltage. 0: The Unit/input power supply voltage is equal to or higher than the monitored voltage.
	1	Unit/Input Power Supply Voltage Drop Detection Hold Bit	1: The status of the Unit/input power supply voltage drop detection is retained. 0: The status of the Unit/input power supply voltage drop detection was reset.
	2 to 7	Reserved	Not available. They are fixed to 0.
PD3	0	Port1 Status Summary Bit	1: Of Port□ Status, any bit except the hold bits is ON. 0: Of Port□ Status, all bits except the hold bits are OFF. □ refers to port numbers 1 to 8. Refer to *Port□ Status* on page 6-4 for details on Port□ Status. A status summary bit is the logical OR of Port□ Status excluding the hold bits.
	1	Port2 Status Summary Bit	
	2	Port3 Status Summary Bit	
	3	Port4 Status Summary Bit	
	4	Port5 Status Summary Bit	
	5	Port6 Status Summary Bit	
	6	Port7 Status Summary Bit	
	7	Port8 Status Summary Bit	

● Port□ Status

The data indicate the detailed status of each port. □ refers to port numbers 1 to 8.

PD	Bit	Assignment	Description
PD*1	0	Port□ Sensor Disconnection Detection Bit	1: A sensor disconnection was detected. 0: A sensor disconnection was not detected.
	1	Port□ Sensor Short Circuit Detection Bit	1: A sensor power supply short circuit was detected. 0: A sensor power supply short circuit was not detected.
	2	Port□ Sensor Disconnection Detection Hold Bit	1: The status of sensor disconnection detection is retained. 0: The status of sensor disconnection detection was reset.
	3	Port□ Sensor Short Circuit Detection Hold Bit	1: The status of sensor power supply short circuit detection is retained. 0: The status of sensor power supply short circuit detection was reset.
	4 to 7	Reserved	Not available. They are fixed to 0.

*1. The number following PD is (2 × port number) + 2. For port 2, for example, the number is (2 × 2) + 2 = 6, or PD6.

PD5, PD7, PD9, PD11, PD13, PD15, PD17, and PD19 are reserved. They are not available. They are fixed to 0.

6-1-2 Digital I/O Variable Hub

The Digital I/O Variable Hub has process input data and process output data.

Process Input Data of Digital I/O Variable Hub

The data structure is shown below.

	Bit							
	7	6	5	4	3	2	1	0
PD0	Input Data							
PD1								
PD2	Smart Status							
PD3								
PD4	Port1 Status							
PD5								
PD6	Port2 Status							
PD7								
PD8	Port3 Status							
PD9								
PD10	Port4 Status							
PD11								
PD12	Port5 Status							
PD13								
PD14	Port6 Status							
PD15								
PD16	Port7 Status							
PD17								

	Bit							
	7	6	5	4	3	2	1	0
PD18	Port8 Status							
PD19								

The following describes each data in detail.
The value 1 indicates TRUE and 0 indicates FALSE.

● Input Data

The data indicate the input status of each port.

PD	Bit	Assignment	Description
PD0	0	Port1 Pin4 Input Bit	1: The relevant input is ON. 0: The relevant input is OFF. A contact that was set to output through the I/O function configuration is always 0.
	1	Port1 Pin2 Input Bit	
	2	Port2 Pin4 Input Bit	
	3	Port2 Pin2 Input Bit	
	4	Port3 Pin4 Input Bit	
	5	Port3 Pin2 Input Bit	
	6	Port4 Pin4 Input Bit	
	7	Port4 Pin2 Input Bit	
PD1	0	Port5 Pin4 Input Bit	1: The relevant input is ON. 0: The relevant input is OFF. A contact that was set to output through the I/O function configuration is always 0.
	1	Port5 Pin2 Input Bit	
	2	Port6 Pin4 Input Bit	
	3	Port6 Pin2 Input Bit	
	4	Port7 Pin4 Input Bit	
	5	Port7 Pin2 Input Bit	
	6	Port8 Pin4 Input Bit	
	7	Port8 Pin2 Input Bit	

● Smart Status

The data indicate the statuses of the Hub and each port.

PD	Bit	Assignment	Description
PD2	0	Unit/Input Power Supply Voltage Drop Detection Bit	1: The Unit/input power supply voltage is below the monitored voltage. 0: The Unit/input power supply voltage is equal to or higher than the monitored voltage.
	1	Unit/Input Power Supply Voltage Drop Detection Hold Bit	1: The status of the Unit/input power supply voltage drop detection is retained. 0: The status of the Unit/input power supply voltage drop detection was reset.
	2	Output Power Supply Voltage Drop Detection Bit	1: The output power supply voltage is below the monitored voltage. 0: The output power supply voltage is equal to or more than the monitored voltage.
	3	Output Power Supply Voltage Drop Detection Hold Bit	1: The status of the output power supply voltage drop detection is retained. 0: The status of the output power supply voltage drop detection was reset.
	4 to 7	Reserved	Not available. They are fixed to 0.
PD3	0	Port1 Status Summary Bit	1: Of Port□ Status, any bit except the hold bits is ON. 0: Of Port□ Status, all bits except the hold bits are OFF. □ refers to port numbers 1 to 8. Refer to *Port□ Status* on page 6-6 for details on Port□ Status. A status summary bit is the logical OR of Port□ Status excluding the hold bits.
	1	Port2 Status Summary Bit	
	2	Port3 Status Summary Bit	
	3	Port4 Status Summary Bit	
	4	Port5 Status Summary Bit	
	5	Port6 Status Summary Bit	
	6	Port7 Status Summary Bit	
	7	Port8 Status Summary Bit	

● Port□ Status

The data indicate the detailed status of each port. □ refers to port numbers 1 to 8.

PD	Bit	Assignment	Description
PD*1	0	Port□ Sensor Disconnection Detection Bit	1: A sensor disconnection was detected. 0: A sensor disconnection was not detected.
	1	Port□ Sensor Short Circuit Detection Bit	1: A sensor power supply short circuit was detected. 0: A sensor power supply short circuit was not detected.
	2	Port□ Sensor Disconnection Detection Hold Bit	1: The status of sensor disconnection detection is retained. 0: The status of sensor disconnection detection was reset.
	3	Port□ Sensor Short Circuit Detection Hold Bit	1: The status of sensor power supply short circuit detection is retained. 0: The status of sensor power supply short circuit detection was reset.
	4 to 7	Reserved	Not available. They are fixed to 0.

*1. The number following PD is (2 × port number) + 2. For port 2, for example, the number is (2 × 2) + 2 = 6, or PD6.

PD	Bit	Assignment	Description
PD*1	0	Port□ Pin4 External Load Disconnection Detection Bit	1: A pin 4 external load disconnection was detected. 0: A pin 4 external load disconnection was not detected.
	1	Port□ Pin4 External Load Short Circuit Detection Bit	1: A pin 4 external load short circuit was detected. 0: A pin 4 external load short circuit was not detected.
	2	Port□ Pin4 External Load Disconnection Detection Hold Bit	1: The status of pin 4 external load disconnection detection is retained. 0: The status of pin 4 external load detection was reset.
	3	Port□ Pin4 External Load Short Circuit Detection Hold Bit	1: The status of pin 4 external load short circuit detection is retained. 0: The status of pin 4 external load short circuit was reset.
	4	Port□ Pin2 External Load Disconnection Detection Bit	1: A pin 2 external load disconnection was detected. 0: A pin 2 external load disconnection was not detected.
	5	Port□ Pin2 External Load Short Circuit Detection Bit	1: A pin 2 external load short circuit was detected. 0: A pin 2 external load short circuit was not detected.
	6	Port□ Pin2 External Load Disconnection Detection Hold Bit	1: The status of pin 2 external load disconnection detection is retained. 0: The status of pin 2 external load detection was reset.
	7	Port□ Pin2 External Load Short Circuit Detection Hold Bit	1: The status of pin 2 external load short circuit detection is retained. 0: The status of pin 2 external load short circuit was reset.

*1. The number following PD is (2 × port number) + 3. For port 2, for example, the number is (2 × 2) +3 = 7, or PD7.

Process Output Data of Digital I/O Variable Hub

The data structure is shown below.

	Bit							
	7	6	5	4	3	2	1	0
PD0	Output Data							
PD1								

The following describes each data in detail.
The value 1 indicates TRUE and 0 indicates FALSE.

Output Data

The data indicate the output status of each port.

PD	Bit	Assignment	Description
PD0	0	Port1 Pin4 Output Bit	1: The relevant output is ON. 0: The relevant output is OFF. If a contact is set to input through the I/O function configuration, setting the contact to 1 does not turn ON the output.
	1	Port1 Pin2 Output Bit	
	2	Port2 Pin4 Output Bit	
	3	Port2 Pin2 Output Bit	
	4	Port3 Pin4 Output Bit	
	5	Port3 Pin2 Output Bit	
	6	Port4 Pin4 Output Bit	
	7	Port4 Pin2 Output Bit	
PD1	0	Port5 Pin4 Output Bit	1: The relevant output is ON. 0: The relevant output is OFF. If a contact is set to input through the I/O function configuration, setting the contact to 1 does not turn ON the output.
	1	Port5 Pin2 Output Bit	
	2	Port6 Pin4 Output Bit	
	3	Port6 Pin2 Output Bit	
	4	Port7 Pin4 Output Bit	
	5	Port7 Pin2 Output Bit	
	6	Port8 Pin4 Output Bit	
	7	Port8 Pin2 Output Bit	

6-2 Service Data

This section lists the service data that are supported by the IO-Link I/O Hubs.

6-2-1 Digital I/O Hub

The following shows the service data of the Digital I/O Hubs.

IO-Link Interface Standards

Index (Dec)	Subin-dex (Dec)	Item	Back-up*1	Format	Ac-cess	Data length (Byte)	Default value	Selectable range	Remarks
2	0	System-Com-mand	---	UInteger	W	1	---	05 hex: Parameter upload start 82 hex: Restore factory set-ting	---
16	0	Vendor Name	---	String	R	20	OMRON Corpora-tion	---	---
17	0	Vendor Text	---	String	R	20	OMRON Corpora-tion	---	---
18	0	Product Name	---	String	R	20	*2	---	Each product model
19	0	Product ID	---	String	R	20	*2	---	Each product model
20	0	Product Text	---	String	R	20	IO-Link I/O Hub	---	---
21	0	Serial Number	---	String	R	16	---	---	---
22	0	Hardware Ver-sion	---	String	R	4	---	---	---
23	0	Firmware Ver-sion	---	String	R	4	---	---	---
24	0	Application Specific Tag	○	String	R/W	32	32 aster-isks	---	---
37	0	Detailed Device Status	---	Record	R	30	---	---	---
40	0	Process Data Input	---	PD In	R	20	---	---	Only for IO-Link I/O Hub with an input
41	0	Process Data Output	---	PD Out	R	2	---	---	Only for IO-Link I/O Hub with an output

*1. The “○” indicates that the data is backed up. The “---” indicates that the data is not backed up.
*2. The values are as follows:

- For the Digital Input Hub: NXR-ID166C-IL2
- For the Digital I/O Variable Hub: NXR-CD166C-IL2

Vendor Specific

Index (Dec)	Subindex*1 (Dec)	Item*1	Back-up*2	Format	Access	Data length (Byte)	Default value	Selectable range	Remarks
65	□	Port□ Pin4 I/O Setting	○	Record	R/W	1	00 hex	00 hex: Input 01 hex: Output	For Digital I/O Variable Hub only
66	□	Port□ Pin2 I/O Setting	○	Record	R/W	1	00 hex	00 hex: Input 01 hex: Output	For Digital I/O Variable Hub only
67	□	Port□ Pin4 Input Filter Setting	○	Record	R/W	1	03 hex	*3	Default value: 1 ms
68	□	Port□ Pin2 Input Filter Setting	○	Record	R/W	1	03 hex	*3	Default value: 1 ms
69	□	Port□ Error Mode Output Setting	○	Record	R/W	1	00 hex	00 hex: Clear 01 hex: Hold	For Digital I/O Variable Hub only
70	□	Port□ Pin4 External Load Disconnection Detection Enable/Disable	○	Record	R/W	1	00 hex	00 hex: Disable 01 hex: Enable	For Digital I/O Variable Hub only
71	□	Port□ Pin2 External Load Disconnection Detection Enable/Disable	○	Record	R/W	1	00 hex	00 hex: Disable 01 hex: Enable	For Digital I/O Variable Hub only
72	□	Port□ Sensor Disconnection Detection Enable/Disable	○	Record	R/W	1	00 hex	00 hex: Disable 01 hex: Enable	---
73	□	Port□ Pin4 External Load Disconnection Detection Hold Reset	---	Record	W	1	01 hex	01 hex: Reset	For Digital I/O Variable Hub only
74	□	Port□ Pin4 External Load Short Circuit Detection Hold Reset	---	Record	W	1	01 hex	01 hex: Reset	For Digital I/O Variable Hub only
75	□	Port□ Pin2 External Load Disconnection Detection Hold Reset	---	Record	W	1	01 hex	01 hex: Reset	For Digital I/O Variable Hub only
76	□	Port□ Pin2 External Load Short Circuit Detection Hold Reset	---	Record	W	1	01 hex	01 hex: Reset	For Digital I/O Variable Hub only
77	□	Port□ Senser Disconnection Detection Hold Reset	---	Record	W	1	01 hex	01 hex: Reset	---

Index (Dec)	Subindex*1 (Dec)	Item*1	Back-up*2	Format	Access	Data length (Byte)	Default value	Selectable range	Remarks
78	□	Port□ Sensor Short Circuit Detection Hold Reset	---	Record	W	1	01 hex	01 hex: Reset	---
79	0	Power Supply Voltage Drop Detection Hold Reset	---	UInteger	W	1	01 hex	01 hex: Reset	---
80	0	All Detection Hold Bits Reset	---	UInteger	W	1	01 hex	01 hex: Reset	---
81	0	Operating Hours	○	Record	R	4	0	---	Unit: h

*1. □ refers to port numbers 1 to 8.
*2. The "○" indicates that the data is backed up. The "---" indicates that the data is not backed up.
*3. For details of the setting range of input filter values, refer to *7-1-7 Digital Input Filter* on page 7-12.

7

Functions of IO-Link I/O Hubs

This section describes the functions of the NXR-series IO-Link I/O Hubs.

7-1 Functions of Digital I/O Hubs 7-2

7-1-1 I/O Function 7-2
7-1-2 I/O Cable Disconnection Detection 7-3
7-1-3 I/O Cable Short-circuit Detection 7-6
7-1-4 All Hold Bits Reset 7-9
7-1-5 Voltage Drop Detection for Unit/Input Power Supply 7-10
7-1-6 Voltage Drop Detection for Output Power Supply 7-11
7-1-7 Digital Input Filter 7-12
7-1-8 Communications Error Output Setting 7-15
7-1-9 Monitoring Total Power-ON Time 7-16

7-1 Functions of Digital I/O Hubs

7-1-1 I/O Function

This section describes the I/O function.

Overview and Applications

This function enables you to set pin 4 and pin 2 of each port to input or output, depending on the devices connected to the Digital I/O Variable Hub.

Applicable Hubs

Digital I/O Variable Hub

Function Details

The following describes the settings for the I/O function. The default values are Input.

Setting*1	Description*1	Default value	Setting range	Unit	Update timing
Port☐ Pin4 I/O Setting	Configures the I/O function of pin 4 of port ☐.	00 hex	00 hex: Input 01 hex: Output	---	Immediately
Port☐ Pin2 I/O Setting	Configures the I/O function of pin 2 of port ☐.	00 hex	00 hex: Input 01 hex: Output	---	Immediately

*1. ☐ refers to port numbers 1 to 8.

You can configure the function by one of the following two procedures.

- Configure the function from CX-ConfiguratorFDT
- Configure the function through message communications from the Controller to the IO-Link device

Refer to the *NXR-series IO-Link Master Unit for EtherNet/IP User's Manual (Cat. No. W619)* or *NXR-series IO-Link Master Unit for EtherCAT User's Manual (Cat. No. W640)* for details on how to configure the function through message communications.

Setting Method

The following describes how to configure the function from CX-ConfiguratorFDT. Refer to *Setting IO-Link Devices with the CX-ConfiguratorFDT* in the *NXR-series IO-Link Master Unit for EtherNet/IP User's Manual (Cat. No. W619)* or *NXR-series IO-Link Master Unit for EtherCAT User's Manual (Cat. No. W640)* for how to create a network configuration and how to go online.

1 Create a network configuration and then register the Digital I/O Variable Hub.

2 Double-click or right-click the device DTM for the Digital I/O Variable Hub to configure, and then select **Configuration**.
The Configuration tab page is displayed. In the Configuration tab page, **Menu** is displayed with **Parameter** selected. Refer to *A-4 Configuration Tab Page* on page A-6 for details on the Configuration tab page.

3 Expand **Pin4 I/O Setting** and **Pin2 I/O Setting**. From the drop-down list of **Value** of **Port□ Pin4 I/O Setting** and **Port□ Pin2 I/O Setting**, select *Input* or *Output*.

4 Right-click the device DTM for the Digital I/O Variable Hub where to store parameters and select **Go online**.
The relevant device goes online. Devices in the Network View are displayed in bold while you are online.

5 Right-click the device DTM again and select **Store to device**.
The parameter settings are stored in the Digital I/O Variable Hub.

7-1-2 I/O Cable Disconnection Detection

This section describes the I/O cable disconnection detection.

Overview and Applications

This function detects disconnection of I/O cables from the Digital I/O Hub. You can enable or disable the disconnection detection.

Applicable Hubs

- Sensor disconnection detection
  All models of the Digital I/O Hub
- External load disconnection detection
  Digital I/O Variable Hub only

Function Details

This function detects sensor disconnection from input and external load disconnection from output.

● I/O Cable Disconnection Detection Points

Disconnection type	Detection point
Pin 4 external load disconnection	Pin 4 disconnection
Pin 2 external load disconnection	Pin 2 disconnection
Sensor disconnection	Power supply +(V) disconnection

Precautions for Correct Use

- The sensor disconnection detection detects the disconnection of the power line to the three-wire sensor but cannot detect the disconnection of the signal line.
- Depending on the connected sensor or the connected external load, the detection function may falsely detect disconnection as follows:
  For sensor disconnection detection
  The detection function falsely detects disconnection when an input device whose current consumption is 0.2 mA or less (dry contacts such as limit switches and relays, some of two-wire proximity sensors) is used. Be sure to turn OFF this function.
  For load disconnection detection
  The detection function falsely detects disconnection when an external load whose load current is 3 mA or less is used. Be sure to turn OFF this function.

Settings

The following shows the settings for the I/O cable disconnection detection.
The default values are Disable so that the disconnection detection does not work during a setup process, etc. when cables are not connected. When you use the disconnection detection, set the disconnection detection settings to Enable.
If you do not want to detect disconnection when no external device is connected, set this function to Disable.

Setting*1	Description*1	Default value	Setting range	Unit	Update timing
Port□ Pin4 External Load Disconnection Detection Enable/Disable	This setting is applicable only to the Digital I/O Variable Hub. This setting enables or disables the disconnection detection for the external load connected to pin 4 of port □. *2	00 hex	00 hex: Disable 01 hex: Enable	---	Immediately
Port□ Pin2 External Load Disconnection Detection Enable/Disable	This setting is applicable only to the Digital I/O Variable Hub. This setting enables or disables the disconnection detection for the external load connected to pin 2 of port □. *3	00 hex	00 hex: Disable 01 hex: Enable	---	Immediately
Port□ Sensor Disconnection Detection Enable/Disable	This setting enables or disables the disconnection detection for the sensor connected to port □. *4*5	00 hex	00 hex: Disable 01 hex: Enable	---	Immediately

*1. □ refers to port numbers 1 to 8.
*2. When pin 4 of port □ is set to input, the function does not work regardless of the set value.
*3. When pin 2 of port □ is set to input, the function does not work regardless of the set value.
*4. The function cannot separately detect disconnection of pin 4 and disconnection of pin 2.
*5. When pin 2 and pin 4 of a Digital I/O Variable Hub are in output mode, the function does not work regardless of the set value.

You can configure the function by one of the following two procedures.
- Configure the function from CX-ConfiguratorFDT
- Configure the function through message communications from the Controller to the IO-Link device

Refer to the *NXR-series IO-Link Master Unit for EtherNet/IP User's Manual (Cat. No. W619)* or *NXR-series IO-Link Master Unit for EtherCAT User's Manual (Cat. No. W640)* for details on how to configure the function through message communications.

● How the Disconnection Detection Works

If the function detects disconnection, the following bits of process input data turn ON and the *I/O Cable Disconnection (7701 hex)* device event occurs. Also, the status appears in the Pin 4/Pin 1 status indicator or Pin 2 status indicator.
Refer to *Process Input Data* of each Hub in *6-1 Process Data* on page 6-2 for details on the process input data.

Disconnection type	Bit which turns ON*1
Pin 4 external load disconnection	• Smart Status Port☐ Status Summary Bit • Port☐ Status Pin4 External Load Disconnection Detection Bit • Port☐ Status Pin4 External Load Disconnection Detection Hold Bit
Pin 2 external load disconnection	• Smart Status Port☐ Status Summary Bit • Port☐ Status Pin2 External Load Disconnection Detection Bit • Port☐ Status Pin2 External Load Disconnection Detection Hold Bit
Sensor disconnection	• Smart Status Port☐ Status Summary Bit • Port☐ Status Sensor Disconnection Detection Bit • Port☐ Status Sensor Disconnection Detection Hold Bit

*1. ☐ refers to port numbers 1 to 8.

Each disconnection detection bit turns OFF when the cause of the disconnection is removed.
On the other hand, each disconnection detection hold bit remains ON after the cause of the disconnection is removed. Refer to *Turning OFF the Disconnection Detection Hold Bits* on page 7-5 for how to turn off the bits.
The Pin 4/Pin 1 status indicator or the Pin 2 status indicator operates according to the status of each relevant disconnection detection bit. The disconnection detection hold bits are irrelevant to indicator display.
Refer to *8-4 Checking for Errors and Troubleshooting with the Device Events* on page 8-9 for details on the device events.
Refer to *3-2 Indicators* on page 3-4 for information on the indicator display.

● Turning OFF the Disconnection Detection Hold Bits

Each disconnection detection hold bit remains ON after the relevant cause is removed. To turn OFF the bits, remove the cause of the disconnection and perform either of the following operations a to c. The operations a and b configure the relevant data in the service data through message communications from the Controller to the IO-Link device. Refer to the *NXR-series IO-Link Master Unit for EtherNet/IP User's Manual (Cat. No. W619)* or *NXR-series IO-Link Master Unit for EtherCAT User's Manual (Cat. No. W640)* for details on how to access the service data through message communications. Refer to *6-2 Service Data* on page 6-9 for details on the service data.

a. Execute a relevant disconnection detection hold reset
   Write *01 hex: reset* in the following service data.
   This turns OFF the disconnection detection hold bits.

Service data*1	Index (Dec)	Subindex*1 (Dec)
Port☐ Pin4 External Load Disconnection Detection Hold Reset	73	☐

Service data*1	Index (Dec)	Subindex*1 (Dec)
Port□ Pin2 External Load Disconnection Detection Hold Reset	75	□
Port□ Sensor Disconnection Detection Hold Reset	77	□

*1. □ refers to port numbers 1 to 8.

b. Execute all hold bits reset
Refer to *7-1-4 All Hold Bits Reset* on page 7-9 for information on executing all hold bits reset.

c. Cycle the Unit/input power supply

Setting Method

The following describes how to configure the function from CX-ConfiguratorFDT. Refer to *Setting IO-Link Devices with the CX-ConfiguratorFDT* in the *NXR-series IO-Link Master Unit for EtherNet/IP User's Manual (Cat. No. W619)* or *NXR-series IO-Link Master Unit for EtherCAT User's Manual (Cat. No. W640)* for how to create a network configuration and how to go online.

1 Create a network configuration and then register the Digital I/O Hub.

2 Double-click or right-click the device DTM for the Digital I/O Hub to configure, and then select **Configuration**.
The Configuration tab page is displayed. In the Configuration tab page, **Menu** is displayed with **Parameter** selected. Refer to *A-4 Configuration Tab Page* on page A-6 for details on the Configuration tab page.

3 Expand the following items.
- **Pin4 External Load Disconnection Detection Enable/Disable**
- **Pin2 External Load Disconnection Detection Enable/Disable**
- **Sensor Disconnection Detection Enable/Disable**

4 From the drop-down list of **Value** of the following expanded items, select **Enable** of **Disable**.
- **Port□ Pin4 External Load Disconnection Detection Enable/Disable**
- **Port□ Pin2 External Load Disconnection Detection Enable/Disable**
- **Port□ Sensor Disconnection Detection Enable/Disable**

5 Right-click the device DTM for the Digital I/O Hub where to store parameters and select **Go online**.
The relevant device goes online. Devices in the Network View are displayed in bold while you are online.

6 Right-click the device DTM again and select **Store to device**.
The parameter settings are stored in the Digital I/O Hub.

7-1-3 I/O Cable Short-circuit Detection

This section describes the I/O cable short-circuit detection.

Overview and Applications

This function detects short-circuits in I/O cables for the Digital I/O Hub. When a short-circuit occurs, the Hub turns off the power supply to the sensor and the digital output to protect the internal circuit.

Applicable Hubs

- Sensor power supply short circuit detection
  All models of the Digital I/O Hub
- External load short circuit detection
  Digital I/O Variable Hub only

Function Details

This function detects sensor power supply short circuit from input and external load short circuit from output.

● I/O Cable Short Circuit Detection Points

Short circuit type	Detection point
Pin 4 external load short circuit	Between pin 4 and power supply -(G)
Pin 2 external load short circuit	Between pin 2 and power supply -(G)
Sensor power supply short circuit	Between power supply +(V) and power supply -(G)

Precautions for Correct Use

The Digital I/O Variable Hub outputs power +(V) to pin 1 of the port regardless of the I/O setting. If the I/O setting is set to output and a short circuit occurs between power supply +(V) and power supply -(G), the function detects sensor power supply short circuit.

● How the Short Circuit Detection Works

If the function detects short circuit, the following bits of process input data turn ON and the *I/O Cable Short-circuit (7710 hex)* device event occurs. Also, the status appears in the Pin 4/Pin 1 status indicator or Pin 2 status indicator.
Refer to *Process Input Data* of each Hub in *6-1 Process Data* on page 6-2 for details on the process input data.

Short circuit type	Bit which turns ON*1
Pin 4 external load short circuit	• Smart Status Port☐ Status Summary Bit • Port☐ Status Pin4 External Load Short Circuit Detection Bit • Port☐ Status Pin4 External Load Short Circuit Detection Hold Bit
Pin 2 external load short circuit	• Smart Status Port☐ Status Summary Bit • Port☐ Status Pin2 External Load Short Circuit Detection Bit • Port☐ Status Pin2 External Load Short Circuit Detection Hold Bit
Sensor power supply short circuit	• Smart Status Port☐ Status Summary Bit • Port☐ Status Sensor Short Circuit Detection Bit • Port☐ Status Sensor Short Circuit Detection Hold Bit

*1. ☐ refers to port numbers 1 to 8.

Each short circuit detection bit turns OFF when the cause of the short circuit is removed.
On the other hand, each short circuit detection hold bit remains ON after the cause of the short circuit is removed. Refer to *Turning OFF the Short Circuit Detection Hold Bits* on page 7-8 for how to turn off the bits.
The Pin 4/Pin 1 status indicator or the Pin 2 status indicator operates according to the status of each relevant short circuit detection bit. The short circuit detection hold bits are irrelevant to indicator display.
Refer to *8-4 Checking for Errors and Troubleshooting with the Device Events* on page 8-9 for details on the device events.
Refer to *3-2 Indicators* on page 3-4 for information on the indicator display.

● Turning OFF the Short Circuit Detection Hold Bits

Each short circuit detection hold bit remains ON after the cause of the short circuit is removed. To turn OFF the bits, remove the cause of the short circuit and perform either of the following operations a to c. The operations a and b configure the relevant data in the service data through message communications from the Controller to the IO-Link device. Refer to the *NXR-series IO-Link Master Unit for EtherNet/IP User's Manual (Cat. No. W619)* or *NXR-series IO-Link Master Unit for EtherCAT User's Manual (Cat. No. W640)* for details on how to access the service data through message communications. Refer to *6-2 Service Data* on page 6-9 for details on the service data.

a. Execute a relevant short circuit detection hold reset
   Write *01 hex: reset* in the following service data.
   This turns OFF the short circuit detection hold bits.

Service data*1	Index (Dec)	Subindex (Dec)*1
Port☐ Pin4 External Load Short Circuit Detection Hold Reset	74	☐
Port☐ Pin2 External Load Short Circuit Detection Hold Reset	76	☐
Port☐ Sensor Short Circuit Detection Hold Reset	78	☐

*1. ☐ refers to port numbers 1 to 8.

b. Execute all hold bits reset
   Refer to *7-1-4 All Hold Bits Reset* on page 7-9 for information on executing all hold bits reset.

c. Cycle the Unit/input power supply

● Short-circuit Protection

The protective functions for external load short circuit and sensor power supply short circuit protect internal circuits only from short circuit for a short period. The short circuit protection for the Hubs is based on thermal shutdown method. Decreased temperature of the output element to protect will cause the output to automatically turn ON. Without the cause of short circuit removed, the output and the power supply to sensor will repeat turning ON and OFF. Leaving the cause of short circuit not removed will result in deterioration of output elements. If a short circuit occurs, immediately turn OFF the relevant output and power supply to the sensor, then remove the cause of the short circuit.

Setting Method

There is no setting for this function.

7-1-4 All Hold Bits Reset

This section describes the all hold bits reset.

Overview and Applications

This function resets all hold bits for detection of disconnection, short-circuit, and power supply voltage drop that occur to the Digital I/O Hub.

Applicable Hubs

All models of the Digital I/O Hub

Function Details

This function resets all error detection hold bits of the Digital I/O Hub.

- Port□ Sensor Disconnection Detection Hold Bit
- Port□ Pin4 External Load Disconnection Detection Hold Bit
- Port□ Pin2 External Load Disconnection Detection Hold Bit
- Port□ Sensor Short Circuit Detection Hold Bit
- Port□ Pin4 External Load Short Circuit Detection Hold Bit
- Port□ Pin2 External Load Short Circuit Detection Hold Bit
- Unit/Input Power Supply Voltage Drop Detection Hold Bit
- Output Power Supply Voltage Drop Detection Hold Bit

Refer to *Process Input Data* of each Hub in *6-1 Process Data* on page 6-2 for details on the each bit.

● How the Reset Operation Works

If the cause of the error is removed, executing reset turns OFF the error detection hold bits.

● Resetting the Bits

Write *01 hex: reset* in the following service data through message communications from the Controller to the IO-Link device.
Doing so turns OFF All Detection Hold Bits Reset.
Turning OFF All Detection Hold Bits Reset turns OFF all error detection hold bits.

Service data	Index (Dec)	Subindex (Dec)
All Detection Hold Bits Reset	80	0

Refer to the *NXR-series IO-Link Master Unit for EtherNet/IP User's Manual (Cat. No. W619)* or *NXR-series IO-Link Master Unit for EtherCAT User's Manual (Cat. No. W640)* for details on how to access the service data through message communications. Refer to *6-2 Service Data* on page 6-9 for details on the service data.

Setting Method

There is no setting for this function.

7-1-5 Voltage Drop Detection for Unit/Input Power Supply

This section describes the voltage drop detection for Unit/input power supply.

Overview and Applications

This function monitors the Unit/input power supply voltage fed to the Digital I/O Hub, and detects voltage drop when the voltage decreases below the monitored voltage.

Applicable Hubs

All models of the Digital I/O Hub

Function Details

This function detects voltage drop when the voltage is certainly below the lower limit for the Unit/input power supply. You cannot configure the monitored voltage.

● How the Power Supply Voltage Drop Detection Works

If the function detects power supply voltage drop, the following bits of process input data turn ON and the *Unit/Input Power Supply Voltage Drop (5111 hex)* device event occurs.
Refer to *Process Input Data* of each Hub in *6-1 Process Data* on page 6-2 for details on the process input data.

Event to detect	Bit which turns ON
Unit/Input Power Supply Voltage Drop	• Unit/Input Power Supply Voltage Drop Detection Bit*1 • Unit/Input Power Supply Voltage Drop Detection Hold Bit

*1. When this status is TRUE, the Input Data of the process data is invalid. Use the Input Data when the status is FALSE.

The Unit/Input Power Supply Voltage Drop Detection Bit turns OFF when the cause of the power supply voltage drop is removed.
On the other hand, the Unit/Input Power Supply Voltage Drop Detection Hold Bit remains ON after the cause of the power supply voltage drop is removed. Refer to *Turning OFF the Power Supply Voltage Drop Detection Hold Bit* on page 7-10 for how to turn off the bits.
Refer to *8-4 Checking for Errors and Troubleshooting with the Device Events* on page 8-9 for details on the device events.

● Turning OFF the Power Supply Voltage Drop Detection Hold Bit

The Power Supply Voltage Drop Detection Hold Bit remains ON after the cause of the power supply voltage drop is removed. To turn OFF the bit, remove the cause of the power supply voltage drop and perform either of the following operations a to c. The operations a and b configure the

relevant data in the service data through message communications from the Controller to the IO-Link device. Refer to the *NXR-series IO-Link Master Unit for EtherNet/IP User's Manual (Cat. No. W619)* or *NXR-series IO-Link Master Unit for EtherCAT User's Manual (Cat. No. W640)* for details on how to access the service data through message communications. Refer to *6-2 Service Data* on page 6-9 for details on the service data.

a. Execute Power Supply Voltage Drop Detection Hold Reset
   Write *01 hex: reset* in the following service data.
   This turns OFF the Power Supply Voltage Drop Detection Hold Bit.

Service data	Index (Dec)	Subindex (Dec)
Power Supply Voltage Drop Detection Hold Reset	79	0

b. Execute all hold bits reset
   Refer to *7-1-4 All Hold Bits Reset* on page 7-9 for information on executing all hold bits reset.

c. Cycle the Unit/input power supply

Setting Method

There is no setting for this function.

7-1-6 Voltage Drop Detection for Output Power Supply

This section describes the voltage drop detection for output power supply.

Overview and Applications

This function monitors the output power supply voltage fed to the Digital I/O Variable Hub, and detects voltage drop when the voltage decreases below the monitored voltage.

Applicable Hubs

Digital I/O Variable Hub

Function Details

This function detects voltage drop when the voltage is certainly below the lower limit for the output power supply. You cannot configure the monitored voltage.

● How the Power Supply Voltage Drop Detection Works

If the function detects power supply voltage drop, the following bits of process input data turn ON and the *Output Power Supply Voltage Drop (8CB0 hex)* device event occurs.
Refer to *Process Input Data of the Digital I/O Variable Hub* in *6-1 Process Data* on page 6-2 for details on the process input data.

Event to detect	Bit which turns ON
Output Power Supply Voltage Drop	• Output Power Supply Voltage Drop Detection Bit*1 • Output Power Supply Voltage Drop Detection Hold Bit

*1. When this status is TRUE, the Output Data of the process data is invalid. Use the Output Data when the status is FALSE.

The Output Power Supply Voltage Drop Detection Bit turns OFF when the cause of the power supply voltage drop is removed.
On the other hand, the Output Power Supply Voltage Drop Detection Hold Bit remains ON after the cause of the power supply voltage drop is removed. Refer to *Turning OFF the Power Supply Voltage Drop Detection Hold Bit* on page 7-12 for how to turn off the bits.
Refer to *8-4 Checking for Errors and Troubleshooting with the Device Events* on page 8-9 for details on the device events.

● Turning OFF the Power Supply Voltage Drop Detection Hold Bit

The Power Supply Voltage Drop Detection Hold Bit remains ON after the cause of the power supply voltage drop is removed. To turn OFF the bit, remove the cause of the power supply voltage drop and perform either of the following operations a to c. The operations a and b configure the relevant data in the service data through message communications from the Controller to the IO-Link device. Refer to the *NXR-series IO-Link Master Unit for EtherNet/IP User's Manual (Cat. No. W619)* or *NXR-series IO-Link Master Unit for EtherCAT User's Manual (Cat. No. W640)* for details on how to access the service data through message communications. Refer to *6-2 Service Data* on page 6-9 for details on the service data.

a. Execute Power Supply Voltage Drop Detection Hold Reset
   Write *01 hex: reset* in the following service data.
   This turns OFF the Power Supply Voltage Drop Detection Hold Bit.

Service data	Index (Dec)	Subindex (Dec)
Power Supply Voltage Drop Detection Hold Reset	79	0

b. Execute all hold bits reset
   Refer to *7-1-4 All Hold Bits Reset* on page 7-9 for information on executing all hold bits reset.

c. Cycle the Unit/input power supply

Setting Method

There is no setting for this function.

7-1-7 Digital Input Filter

This section describes the digital input filter.

Overview and Applications

This function eliminates the chattering or the noises from input signals to the Digital I/O Hub. When the input data changes without stabilization of the state of the contact point due to chattering and noise, this function prevents changes in data and stabilizes it.

Applicable Hubs

All models of the Digital I/O Hub

Function Details

This function reads inputs (ON or OFF) during a set time. When all readings are the same (all readings are ON or all readings are OFF), this function turns ON or OFF the input value.

When an input changes from OFF to ON (or from ON to OFF), this function starts reading the input from the moment four times at an interval of a quarter of the set time. When all readings are ON (or OFF), this function turns ON (or OFF) the input value.

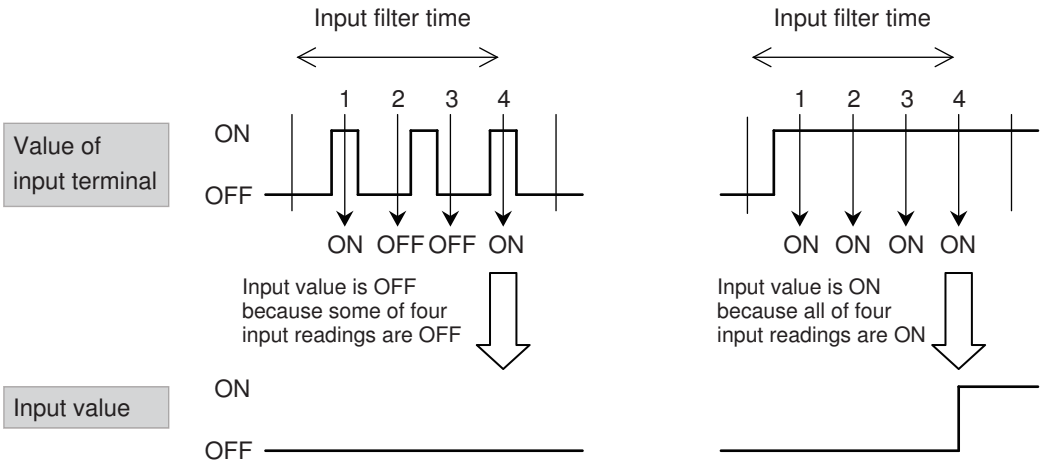

You can set the read time to the following: 0 ms, 0.5 ms, 1 ms (factory setting), 2 ms, 4 ms, 8 ms, 16 ms, 32 ms, 64 ms, or 128 ms.

Using this function causes a delay of the set time in turning ON (or OFF) contacts (ON delay time). The ON delay time is represented by input response time (time required to read input) + input filter time. *1

*1. For the input response time, use the values of *ON response time* and *OFF response time* specified in *2-1-2 Individual Specifications* on page 2-2.

The settings for the digital input filter are as follows.

Setting*1	Description	Default value	Setting range	Unit	Update timing
Port☐ Pin4 Input Filter Setting	Configures the input filter time for pin 4 of each port.	02 hex	00 hex: 0 ms 01 hex: 0.5 ms 02 hex: 1 ms 03 hex: 2 ms 04 hex: 4 ms 05 hex: 8 ms 06 hex: 16 ms 07 hex: 32 ms 08 hex: 64 ms 09 hex: 128 ms	---	Immediately
Port☐ Pin2 Input Filter Setting	Configures the input filter time for pin 2 of each port.				

*1. ☐ refers to port numbers 1 to 8.

You can configure the function by one of the following two procedures.

- Configure the function from CX-ConfiguratorFDT
- Configure the function through message communications from the Controller to the IO-Link device

Refer to the *NXR-series IO-Link Master Unit for EtherNet/IP User's Manual (Cat. No. W619)* or *NXR-series IO-Link Master Unit for EtherCAT User's Manual (Cat. No. W640)* for details on how to configure the function through message communications.

Setting Method

The following describes how to configure the function from CX-ConfiguratorFDT. Refer to *Setting IO-Link Devices with the CX-ConfiguratorFDT* in the *NXR-series IO-Link Master Unit for EtherNet/IP User's Manual (Cat. No. W619)* or *NXR-series IO-Link Master Unit for EtherCAT User's Manual (Cat. No. W640)* for how to create a network configuration and how to go online.

1 Create a network configuration and then register the Digital I/O Hub.

2 Double-click or right-click the device DTM for the Digital I/O Hub to configure, and then select **Configuration**.
The Configuration tab page is displayed. In the Configuration tab page, **Menu** is displayed with **Parameter** selected. Refer to *A-4 Configuration Tab Page* on page A-6 for details on the Configuration tab page.

3 Expand **Pin4 Input Filter Setting** and **Pin2 Input Filter Setting**. From the drop-down list of **Value** of **Port☐ Pin4 Input Filter Setting** and **Port☐ Pin2 Input Filter Setting**, select a filter value.

4 Right-click the device DTM for the Digital I/O Hub where to store parameters and select **Go online**.
The relevant device goes online. Devices in the Network View are displayed in bold while you are online.

5 Right-click the device DTM again and select **Store to device**.
The parameter settings are stored in the Digital I/O Hub.

7-1-8 Communications Error Output Setting

This section describes the communications error output setting.

Overview and Applications

This function performs the preset output operation when the Digital I/O Variable Hub cannot receive output data from the IO-Link Master Unit.

The Hub cannot receive output data in the following situations.
- When an IO-Link communications error occurred.
- When the Hub received an output disabled notification from the IO-Link Master Unit.

Applicable Hubs

Digital I/O Variable Hub

Function Details

The following item configure the output operation for occurrence of communications errors.

Setting*1	Description	Default value	Setting range	Unit	Update timing
Port□ Error Mode Output Setting	Sets each port to hold the pre-error output or clear it when an error occurs.	00 hex	00 hex: Clear 01 hex: Hold	---	Immediately

*1. □ refers to port numbers 1 to 8.

You can configure the function by one of the following two procedures.
- Configure the function from CX-ConfiguratorFDT
- Configure the function through message communications from the Controller to the IO-Link device

Refer to the *NXR-series IO-Link Master Unit for EtherNet/IP User's Manual (Cat. No. W619)* or *NXR-series IO-Link Master Unit for EtherCAT User's Manual (Cat. No. W640)* for details on how to configure the function through message communications.

Setting Method

The following describes how to configure the function from CX-ConfiguratorFDT. Refer to *Setting IO-Link Devices with the CX-ConfiguratorFDT* in the *NXR-series IO-Link Master Unit for EtherNet/IP User's Manual (Cat. No. W619)* or *NXR-series IO-Link Master Unit for EtherCAT User's Manual (Cat. No. W640)* for how to create a network configuration and how to go online.

1 Create a network configuration and then register the Digital I/O Variable Hub.

2 Double-click or right-click the device DTM for the Digital I/O Variable Hub to configure, and then select **Configuration**.

The Configuration tab page is displayed. In the Configuration tab page, **Menu** is displayed with **Parameter** selected. Refer to *A-4 Configuration Tab Page* on page A-6 for details on the Configuration tab page.

3 Expand **Error Mode Output Setting**. From the drop-down list of **Port□ Error Mode Output Setting**, select *Clear* or *Hold*.

4 Right-click the device DTM for the Digital I/O Variable Hub where to store parameters and select **Go online**.
The relevant device goes online. Devices in the Network View are displayed in bold while you are online.

5 Right-click the device DTM again and select **Store to device**.
The parameter settings are stored in the Digital I/O Variable Hub.

7-1-9 Monitoring Total Power-ON Time

This section describes the monitoring total power-ON time.

Overview and Applications

This function records the time period during which the Unit/input power is supplied to the Digital I/O Hub, and displays the period as the operating hours of the Hub.

Applicable Hubs

All models of the Digital I/O Hub

Function Details

The following shows the specifications of the monitoring total power-ON time.

Item	Specification
Measurement time	0 to 715,827,882 hours
Measurement interval	10 minutes
Display unit	1 hour (truncated to an integer)
Default setting	0 hours

Setting Method

There is no setting for this function.

Checking the Operating Hours

There are two ways to check the operating hours.

- Check from CX-ConfiguratorFDT

- Check through message communications from the Controller to the IO-Link device

● Checking from CX-ConfiguratorFDT

The following describes how to check from CX-ConfiguratorFDT. Refer to *Setting IO-Link Devices with the CX-ConfiguratorFDT* in the *NXR-series IO-Link Master Unit for EtherNet/IP User's Manual (Cat. No. W619)* or *NXR-series IO-Link Master Unit for EtherCAT User's Manual (Cat. No. W640)* for how to create a network configuration and how to go online.

1 Create a network configuration and then register the Digital I/O Hub.

2 Right-click the device DTM and select **Go online**.
The relevant device goes online. Devices in the Network View are displayed in bold while you are online.

3 In the Configuration tab page, click **Observation** under **Menu**.
The **Operating Hours** indicates the operating hours of the Hub.

● Checking through Message Communications

Read the following service data through message communications. Refer to the *NXR-series IO-Link Master Unit for EtherNet/IP User's Manual (Cat. No. W619)* or *NXR-series IO-Link Master Unit for EtherCAT User's Manual (Cat. No. W640)* for details on how to read data through message communications. Refer to *6-2 Service Data* on page 6-9 for details on the service data.

Service data	Index (Dec)	Subindex (Dec)
Operating Hours	81	0

8

Troubleshooting

This section describes troubleshooting for the NXR-series IO-Link I/O Hubs.

8-1 Error Notification Methods 8-2
8-1-1 Error Notification Method for EtherNet/IP 8-2
8-1-2 Error Notification Method for EtherCAT 8-3

8-2 Checking for Errors 8-4
8-2-1 Checking for EtherNet/IP Errors 8-4
8-2-2 Checking for EtherCAT Errors 8-5

8-3 Checking for Errors and Troubleshooting with the Indicators 8-6
8-3-1 Status Indicators 8-6
8-3-2 I/O Indicators 8-7

8-4 Checking for Errors and Troubleshooting with the Device Events 8-9
8-4-1 Device Events 8-9
8-4-2 Reading and Clearing Device Events 8-9
8-4-3 List of Device Events and Troubleshooting 8-11

8-5 Resetting Errors 8-12

8-1 Error Notification Methods

8-1-1 Error Notification Method for EtherNet/IP

This section shows an example of system configuration where an NXR-series IO-Link Master Unit for EtherNet/IP is connected to an IO-Link I/O Hub and describes the methods of error notification. The IO-Link I/O Hub notifies an error to the IO-Link Master Unit by the following methods. Refer to *8-2 Checking for Errors* on page 8-4 for how to check the notified error.

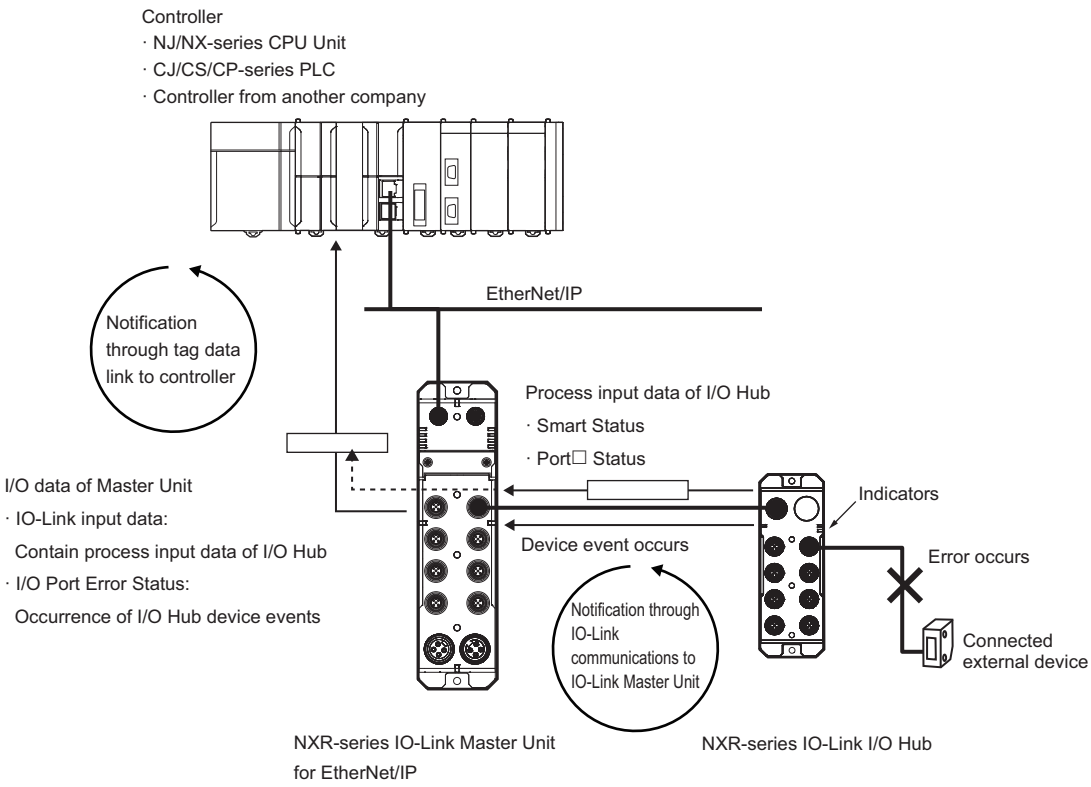

Error notification type	Overview	Notification method
Indicators	Indicators of the IO-Link I/O Hub.	---
Process input data	Input data of the IO-Link I/O Hub. The data contain I/O Hub status information as well as input information from connected external devices.	When an error occurs, the Hub cyclically sends the following data of the process input data through IO-Link communications to the IO-Link Master Unit. • Smart Status • Port□ Status The sent statuses are stored in the following I/O data of the IO-Link Master Unit. • IO-Link input data The IO-Link Master Unit sends the data through network communications to the Controller. In this example, the IO-Link Master Unit cyclically sends the data to the Controller through tag data link of EtherNet/IP communications.

Error notification type	Overview	Notification method
IO-Link I/O Hub device events	Device events (errors or warnings) that the IO-Link I/O Hub detects.	The Hub cyclically sends information on occurrence of device events through IO-Link communications to the IO-Link Master Unit. The sent information is reflected in the following I/O data of the IO-Link Master Unit. • I/O Port Error Status The IO-Link Master Unit sends the status through network communications to the Controller. In this example, the IO-Link Master Unit cyclically sends the data to the Controller through tag data link of EtherNet/IP communications.

8-1-2 Error Notification Method for EtherCAT

This section describes only the differences from the description of the error notification method for EtherNet/IP, when an NXR-series IO-Link Master Unit for EtherCAT is used for the IO-Link Master Unit.

Error notification type	Overview	Notification method
Process input data	Input data of the IO-Link I/O Hub. The data contain I/O Hub status information as well as input information from connected external devices.	When an error occurs, the Hub cyclically sends the following data of the process input data through IO-Link communications to the IO-Link Master Unit. • Smart Status • Port□ Status The sent statuses are stored in the following I/O data of the IO-Link Master Unit. • Port□ IO-Link Input Data The IO-Link Master Unit sends the data through EtherCAT communications to the Controller.
IO-Link I/O Hub device events	Device events (errors or warnings) that the IO-Link I/O Hub detects.	The Hub cyclically sends information on occurrence of device events through IO-Link communications to the IO-Link Master Unit. The sent information is reflected in the following I/O data of the IO-Link Master Unit. • *Port1_2 I/O Port Error Status* • *Port3_4 I/O Port Error Status* • *Port5_6 I/O Port Error Status* • *Port7_8 I/O Port Error Status* The IO-Link Master Unit sends the status through network communications to the Controller.

8-2 Checking for Errors

8-2-1 Checking for EtherNet/IP Errors

This section uses the example of system configuration shown in the Error Notification Methods and describes how to check for errors.
You can check for errors that the IO-Link I/O Hub detects with the following methods.

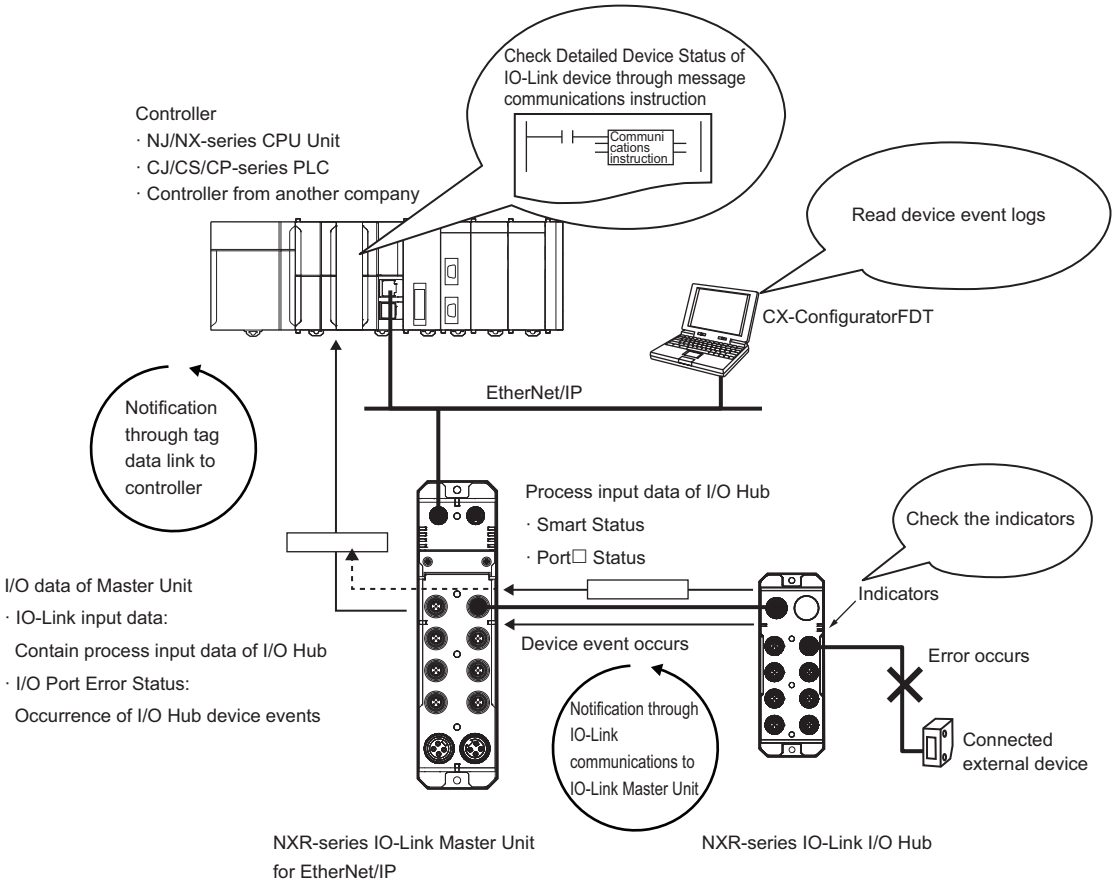

Checking method	What you can check
Checking the indicators	You can check the status of the IO-Link I/O Hub and whether an error occurred.

Checking method	What you can check
Checking the I/O data of the IO-Link Master Unit	a. Status information The IO-Link input data of the IO-Link Master Unit sent to the Controller. The data enable you to check the following process input data of IO-Link Hub: • Smart Status • Port□ Status Refer to *Process Input Data* of each I/O Hub in *6-1 Process Data* on page 6-2 for details on the statuses. b. Occurrence of device events The I/O port error status of the IO-Link Master Unit sent to the Controller. The status enables you to check for occurrence of device events. Refer to the *NXR-series IO-Link Master Unit for EtherNet/IP User's Manual (Cat. No. W619)* for information on the IO-Link input data of the IO-Link Master Unit and the I/O port error status.
Checking device events	CX-ConfiguratorFDT can read device events. Also, you can read Detailed Device Status of the service data with the message communications instruction from the Controller.

8-2-2 Checking for EtherCAT Errors

This section describes only the differences from the description of checking for EtherNet/IP errors, when an NXR-series IO-Link Master Unit for EtherCAT is used for the IO-Link Master Unit.

Checking method	What you can check
Checking the I/O data of the IO-Link Master Unit	a. Status information The Port□ IO-Link Input Data of the IO-Link Master Unit sent to the Controller. The data enable you to check the following process input data of IO-Link Hub: • Smart Status • Port□ Status Refer to *Process Input Data* of each I/O Hub in *6-1 Process Data* on page 6-2 for details on the statuses. b. Occurrence of device events The following error status of the IO-Link Master Unit sent to the Controller. The status enables you to check for occurrence of device events. • *Port1_2 I/O Port Error Status* • *Port3_4 I/O Port Error Status* • *Port5_6 I/O Port Error Status* • *Port7_8 I/O Port Error Status* Refer to the *NXR-series IO-Link Master Unit for EtherCAT User's Manual (Cat. No. W640)* for information on the IO-Link input data of the IO-Link Master Unit and the I/O port error status.

8-3 Checking for Errors and Troubleshooting with the Indicators

This section describes how to check for errors with the indicators of the IO-Link I/O Hub and troubleshoot the errors.

8-3-1 Status Indicators

Digital I/O Hub

U/IN PWR	OUT PWR*1	IO-Link		Hub status	Cause	Correction
Green	Green	Green	Red			
Lit	Lit	Flashing	---	The Hub is operating normally.	---	---
		---	Flashing	IO-Link communications are not operating normally.	IO-Link cable broken	Check the IO-Link cable to see if it is broken. If the cable is broken, replace it.
					IO-Link I/O Hub failure	Replace the IO-Link I/O Hub.
					IO-Link Master Unit failure	Replace the IO-Link Master Unit.
		---	Lit	A following error is detected. • Hardware Error • Service Data Error	Non-volatile memory failure	Cycle the Unit/input power supply. If cycling the Unit/input power supply does not clear the error, replace the Hub.
Not lit	---	Not lit	Not lit	The Unit/input power is not supplied.	---	Check if the Unit/input power is supplied. If it is supplied, check if the power supply voltage is not below the specification.
---	Not lit	---	---	The output power is not supplied.	---	Check if the output power is supplied. *1 If it is supplied, check the following: • Pin 2 of the IO-Link Master Unit port is in SIO (DO) Mode and ON If it is supplied, check if the power supply voltage is not below the specification.

*1. For the Digital I/O Variable Hub only

Note The "---" of the indicator status indicates that the status is unstable.

8-3-2 I/O Indicators

Digital I/O Hub

● Digital Input Hub

Pin 4/Pin 1 status		Pin 2 status		Hub status	Cause	Correction
Yellow	Red	Yellow	Red			
Lit	---	---	---	Pin 4 input is ON	---	---
---	Flashing	---	---	Sensor Disconnected Error occurred to pin 1	The I/O cable is broken.	Check the I/O cable to see if it is broken. If the cable is broken, replace it.
				Sensor power supply short-circuit error occurred to pin 1	There is a short-circuit in the I/O cable.	Check the wiring for short circuit of sensor power supply.
Not lit	Not lit	---	---	Pin 4 input is OFF	---	---
---	---	Lit	---	Pin 2 input is ON	---	---
---	---	Not lit	---	Pin 2 input is OFF	---	---

Note The "---" of the indicator status indicates that the status is unstable.

● Digital I/O Variable Hub

Pin 4/Pin 1 status		Pin 2 status		Hub status		Cause	Correction
Yellow	Red	Yellow	Red				
Lit	---	---	---	When pin 4 is set to input	Pin 4 input is ON	---	---
				When pin 4 is set to output	Pin 4 output is ON	---	---

Pin 4/Pin 1 status		Pin 2 status		Hub status		Cause	Correction
Yellow	Red	Yellow	Red				
---	Flashing	---	---	When pin 4 or pin 2 is set to input	Sensor Disconnected Error occurred to pin 1	The I/O cable is broken.	Check the I/O cable to see if it is broken. If the cable is broken, replace it.
					Sensor power supply short-circuit error occurred to pin 1	There is a short-circuit in the I/O cable.	Check the wiring for short circuit of sensor power supply.
				When pin 4 is set to output	External load disconnected error occurred to pin 4	The I/O cable is broken.	Check the I/O cable to see if it is broken or check if the connected external device is faulty.
					External load short-circuit error occurred to pin 4	There is a short-circuit in the I/O cable.	Check the wiring for short circuit of the connected external device.
					Sensor power supply short-circuit error occurred to pin 1		Check the wiring for short circuit of sensor power supply.
Not lit	Not lit	---	---	When pin 4 is set to input	Pin 4 input is OFF	---	---
				When pin 4 is set to output	Pin 4 output is OFF	---	---
---	---	Lit	---	When pin 2 is set to input	Pin 2 input is ON	---	---
				When pin 2 is set to output	Pin 2 output is ON	---	---
---	---	---	Flashing	When pin 2 is set to output	External load disconnected error occurred	The I/O cable is broken.	Check the I/O cable to see if it is broken or check if the connected external device is faulty.
					External load short-circuit error occurred	There is a short-circuit in the I/O cable.	Check the wiring for short circuit of the connected external device.
---	---	Not lit	Not lit	When pin 2 is set to input	Pin 2 input is OFF	---	---
				When pin 2 is set to output	Pin 2 output is OFF	---	---

Note The “---” of the indicator status indicates that the status is unstable.

8-4 Checking for Errors and Troubleshooting with the Device Events

The IO-Link I/O Hub registers an error that occurs to itself as a device event.
Occurrence of a device event is notified to the IO-Link Master Unit and then reflected in the I/O data of the IO-Link Master Unit. Refer to the *NXR-series IO-Link Master Unit for EtherNet/IP User's Manual (Cat. No. W619)* or *NXR-series IO-Link Master Unit for EtherCAT User's Manual (Cat. No. W640)* for details on the I/O data.

The device events of the IO-Link I/O Hub are described below.

8-4-1 Device Events

This function registers an error that occurs to the IO-Link I/O Hub as a device event and notifies it to the IO-Link Master Unit. Each device event can be registered only once. The same event is not registered more than once. Refer to *8-4-3 List of Device Events and Troubleshooting* on page 8-11 for details on the device events registered.
The following describes how to read and clear device events.

8-4-2 Reading and Clearing Device Events

This section describes how to read and clear device events.

Reading Device Events

There are two ways to read device events as below.
- Using CX-ConfiguratorFDT
- Using message communications from the Controller to the IO-Link device

Precautions for Correct Use

- Device events are registered in a volatile memory and therefore cleared from the IO-Link I/O Hub once the Unit/input power supply is turned OFF.
- Device events are also cleared from CX-ConfiguratorFDT if you turn OFF the Unit/input power supply and then read the device with CX-ConfiguratorFDT.

● Using CX-ConfiguratorFDT

This section describes how to read device events with CX-ConfiguratorFDT. Refer to *Setting IO-Link Devices with the CX-ConfiguratorFDT* in the *NXR-series IO-Link Master Unit for EtherNet/IP User's Manual (Cat. No. W619)* or *NXR-series IO-Link Master Unit for EtherCAT User's Manual (Cat. No. W640)* for how to create a network configuration and how to go online.

1 Create a network configuration and then register the IO-Link I/O Hub.

2 Right-click the device DTM and select **Go online**.

The relevant device goes online. Devices in the Network View are displayed in bold while you are online.

3 In the Configuration tab page, click **Diagnosis** under **Menu**.

4 Expand **Detailed Device Status**.

5 Right-click the device DTM and select **Load from device**.
Registered device events are displayed in **Value**.

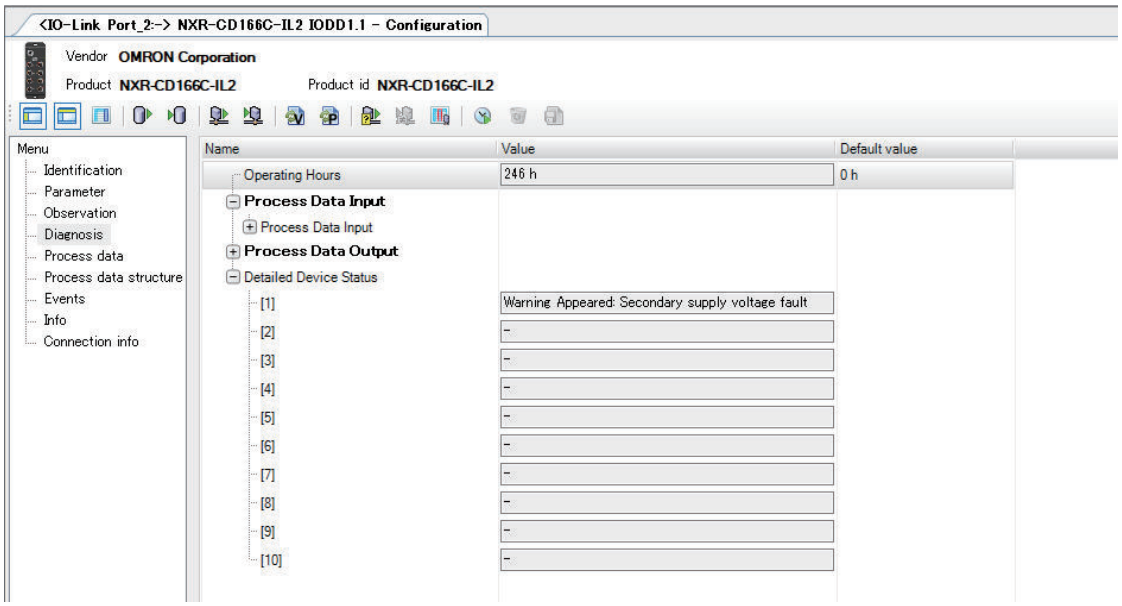

● Using Message Communications

Use message communications from the Controller to the IO-Link device to read the following service data of the IO-Link I/O Hub.

- Detailed Device Status (index: 37, subindex: 0)
  Message communications can read the device event type and event code.
  The following shows the format of device event. Refer to the *NXR-series IO-Link Master Unit for EtherNet/IP User's Manual (Cat. No. W619)* or *NXR-series IO-Link Master Unit for EtherCAT User's Manual (Cat. No. W640)* for details on how to read data through message communications.

Item	Data size (byte)	Description
Device event type	1	Contains a level corresponding to the type of IO-Link event code. Error: 0xF4 Warning: 0xE4
IO-Link event code	2	Contains an IO-Link event code.

You can read up to 10 device events (30 bytes) in this format. All read data will be 0 if no event occurred.

Clearing Device Events

Resolving an error of the IO-Link I/O Hub clears the relevant device event log.

8-4-3 List of Device Events and Troubleshooting

The list of registered device events and corrections is as below.

IO-Link event code	Event name	CX-ConfiguratorFDT display*1	Type	Description	Correction
5000 hex	Hardware Error	Error Appeared: Device hardware fault	Error	The Non-volatile Memory Hardware Error was detected.	Cycle the Unit/input power supply to the IO-Link I/O Hub. If this error persists after you cycle the power supply, replace the IO-Link I/O Hub.
5111 hex	Unit/Input Power Supply Voltage Drop	Warning Appeared: Primary supply voltage under-run	Warning	The Unit/input power supply voltage is low.	Check if the Unit/input power is supplied. If it is supplied, check if the power supply voltage is not below the specification.
6320 hex	Service Data Error	Error Appeared: Parameter error	Error	The power supply to the IO-Link I/O Hub was interrupted while writing of the setting parameters for the IO-Link I/O Hub. Alternatively, communications with CX-ConfiguratorFDT were interrupted.	Download the setting parameters for the IO-Link I/O Hub again. Do not interrupt the power supply to the IO-Link I/O Hub or communications with CX-ConfiguratorFDT during download.
7701 hex	I/O Cable Disconnection	Error Appeared: Wire break of subordinate device 1	Error	The I/O cable is broken.	Check the wiring of the I/O cable.
7710 hex	I/O Cable Short-circuit	Error Appeared: Short circuit	Error	There is a short-circuit in the I/O cable.	Check the wiring of the I/O cable.
8CB0 hex	Output Power Supply Voltage Drop	Warning Appeared: Secondary supply voltage fault	Warning	The output power supply voltage is low.	Check if the output power is supplied. If it is supplied, check the following: • Pin 2 of the IO-Link Master Unit port is in SIO (DO) Mode and ON If it is supplied, check if the power supply voltage is not below the specification.
8DFE hex	Non-volatile Memory Write Error	Warning Appeared: Non-volatile Memory Write Error	Warning	Failed to write to the non-volatile memory.	Download the setting parameters for the IO-Link I/O Hub again. If the problem persists after you download the setting parameters, replace the IO-Link I/O Hub.

*1. Appears in **Value** of **Detailed Device Status**.

8-5 Resetting Errors

Different types of errors that occur to the IO-Link I/O Hub require different reset procedures.
The following shows procedures to reset each error.

Error name	Reset procedure
Hardware Error	Cycle the Unit/input power supply to the IO-Link I/O Hub. If this error persists after you cycle the power supply, replace the IO-Link I/O Hub.
Non-volatile Memory Write Error	Download the setting parameters for the IO-Link I/O Hub again. If the problem persists after you download the setting parameters, replace the IO-Link I/O Hub.
Service Data Error	Download the setting parameters for the IO-Link I/O Hub again.
Unit/Input Power Supply Voltage Drop	After the cause of the error is removed, reset the relevant error detection hold bit or cycle the Unit/input power supply to clear the error. Only removing the error cause does not clear the error. For how to reset the error detection hold bit, refer to the information on *how to turn off the hold bit* of each error detection function described in *Section 7 Functions of IO-Link I/O Hubs* on page 7-1.
Output Power Supply Voltage Drop	
I/O Cable Disconnection	
I/O Cable Short-circuit	

Precautions for Correct Use

Resetting an error does not remove the cause of the error. Remove the cause of the error before you reset the error.

9

Inspection and Maintenance

This section describes inspection and maintenance of the NXR-series IO-Link I/O Hubs.

9-1 Cleaning and Inspection 9-2
9-1-1 Cleaning 9-2
9-1-2 Inspection Procedure 9-2

9-2 Maintenance Procedure 9-4
9-2-1 Handling an IO-Link I/O Hub to Replace 9-4
9-2-2 Replacing an IO-Link I/O Hub 9-4

9-1 Cleaning and Inspection

This section describes daily device maintenance such as cleaning and inspection.
Inspect the IO-Link I/O Hub daily or periodically in order to keep it in optimal operating condition.

9-1-1 Cleaning

Clean the device regularly as described below in order to keep it in optimal operating condition.

- Wipe the device over with a soft, dry cloth when performing daily cleaning.
- If dirt remains even after wiping with a soft, dry cloth, wipe with a cloth that has been wet with a sufficiently diluted detergent (2%) and wrung dry.
- The IO-Link I/O Hubs will become stained if items such as rubber, vinyl products, or adhesive tape are left on it for a long period. Remove such items during regular cleaning.

Precautions for Correct Use

Never use volatile solvents, such as paint thinner, benzene, or chemical wipes. They may deteriorate the coating of the Hubs.

9-1-2 Inspection Procedure

Be sure to perform periodic inspections to ensure the device is maintained in the optimal operating condition.
Inspections should be performed every six month to every year.
When you operate the device in a location subject to extremely high temperatures and high humidity or dust, perform inspections more frequently.

Tools Required for Inspections

● Tools Always Required

- Phillips screwdriver
- Voltage tester (or digital voltmeter)
- Torque handle
- Industrial alcohol and pure cotton cloth

● Tools Required Occasionally

- Thermometer and hygrometer
- Oscilloscope

Inspection Items

Inspect the following items to check if the results meet the criteria.
If the results do not meet the criteria, improve the environment or adjust the device so that inspection results meet the criteria.

Item	Inspection	Criteria	Tool
Environment	Check the ambient temperature and the temperature inside the panel	-10 to 55°C	Thermometer
	Check the ambient humidity and the humidity inside the panel	25% to 85% (with no condensation)	Hygrometer
	Check for accumulation of dust	No accumulation of dust	Inspect visually
Installation condition	Check that the IO-Link I/O Hub is securely fixed	No looseness	Phillips screwdriver
	Check that the waterproof covers of the cables are tightened to an appropriate torque on the connectors of the IO-Link I/O Hub	The covers are tightened to the specified torque	Torque handle
	Check for damaged connecting cables	No visible damage	Inspect visually

9-2 Maintenance Procedure

9-2-1 Handling an IO-Link I/O Hub to Replace

If the IO-Link I/O Hub failed, the Hub cannot exchange data with connected external devices, so it affects control of devices.
Restore your system immediately.
To restore your system as soon as possible, it is recommended to prepare a spare.

Considerations for Replacing an IO-Link I/O Hub

When you find a fault during inspection and replace the device, keep in mind the following:

- After replacement, check that there are no problems with the new device.
- When you return a faulty device for repair, send the device to your OMRON representative with a note describing your problem in as much detail as possible.
- For poor contact, take a clean cotton cloth, soak the cloth in industrial alcohol, and carefully wipe the contacts.

9-2-2 Replacing an IO-Link I/O Hub

This section describes replacement procedure on the assumption that the following conditions are met:

- The pre-replacement setting parameters for the IO-Link I/O Hub are already backed up to the IO-Link Master Unit.
- The conditions for the IO-Link Master Unit to automatically perform restoration when IO-Link communications start are already met.

Refer to the *NXR-series IO-Link Master Unit for EtherNet/IP User's Manual (Cat. No. W619)* or *NXR-series IO-Link Master Unit for EtherCAT User's Manual (Cat. No. W640)* for details on how to back up or restore the IO-Link device settings to the IO-Link Master Unit. The replacement procedure is as follows:

1 Turn OFF the Unit/input power supply and output power supply to the connected IO-Link Master Unit.
The Unit/input power supply and output power supply to the IO-Link I/O Hub are turned OFF.

2 Replace the IO-Link I/O Hub.

3 Turn ON the Unit/input power supply and output power supply to the connected IO-Link Master Unit.
The Unit/input power supply and output power supply to the IO-Link I/O Hub are turned ON.
IO-Link communications with the connected IO-Link Master Unit is started.
At this time, parameter settings of the IO-Link I/O Hub that are backed up to the connected IO-Link Master Unit will be automatically restored to the IO-Link I/O Hub.

A

Appendices

This section describes version-related information of the NXR-series IO-Link I/O Hubs and considerations for connecting two-wire DC sensors.

A-1 Version Information A-2

A-2 Considerations for Connecting a Two-wire DC Sensor A-3

A-3 Wiring Precautions for External Output Signal Lines A-5

A-4 Configuration Tab Page A-6

A-1 Version Information

This section describes the relationship between the unit versions of the IO-Link I/O Hubs and the NXR-series IO-Link I/O Master Unit for EtherNet/IP and the versions of the Support Software. If you use any of the combinations of versions/unit versions that are the same or that are later or higher than the corresponding versions given in the following table, you can use all of the functions that are supported by that unit version of the IO-Link I/O Hub.

IO-Link I/O Hub		NXR-series IO-Link Master Unit for EtherNet/IP	Support Software
Model	**Unit version**	**Unit version of NXR-ILM08C-EIT**	**CX-ConfiguratorFDT version**
NXR-ID166C-IL2	Ver.1.0	Ver.1.0	Ver.2.54
NXR-CD166C-IL2	Ver.1.0	Ver.1.0	Ver.2.54

This section describes the relationship between the unit versions of the IO-Link I/O Hubs and the NXR-series IO-Link Master Unit for EtherCAT and the versions of the Support Software. If you use any of the combinations of versions/unit versions that are the same or that are later or higher than the corresponding versions given in the following table, you can use all of the functions that are supported by that unit version of the IO-Link I/O Hub.

IO-Link I/O Hub		NXR-series IO-Link Master Unit for EtherCAT	Support Software
Model	**Unit version**	**Unit version of NXR-ILM08C-ECT**	**CX-ConfiguratorFDT version**
NXR-ID166C-IL2	Ver.1.0	Ver.1.0	Ver. 3.01, or Ver. 2.59 with common module as of January 2024 or later applied
NXR-CD166C-IL2	Ver.1.0	Ver.1.0	Ver. 3.01, or Ver. 2.59 with common module as of January 2024 or later applied

A-2 Considerations for Connecting a Two-wire DC Sensor

When you use a two-wire DC sensor with your IO-Link I/O Hub, check that the following conditions are met. Failure to meet these conditions may result in operating errors.

Relation between ON Voltage of the IO-Link I/O Hubs and Sensor Residual Voltage

The IO-Link I/O Hubs cannot detect sensor output ON without the following conditions met:

$V_{ON} \leq V_{CC} - V_R$

V_{CC}: Power supply voltage applied to the device (Unit/input power supply voltage)

V_{ON}: ON voltage applied to the input of the IO-Link I/O Hub

V_R: Sensor's output residual voltage

Relation between ON Current of the IO-Link I/O Hubs and Sensor Control Output

The IO-Link I/O Hubs cannot detect sensor output ON without the following conditions met:

I_{OUT} (min) $\leq I_{ON} \leq I_{OUT}$ (max)

I_{OUT}: Sensor control output (load current)

I_{ON}: Input current to the IO-Link I/O Hub

When I_{ON} is smaller than I_{OUT} (min), connect a bleeder resistor R.

The bleeder resistor constant can be calculated as follows:
Select an appropriate bleeder resistor R so that both equations can be satisfied.

$R \leq (V_{CC} - V_R) / (I_{OUT}\text{ (min)} - I_{ON})$

Rated power W of bleeder resistor $\geq (V_{CC} - V_R)^2 / R \times 4$ [allowable margin]

Example: When pin 4 is used for input

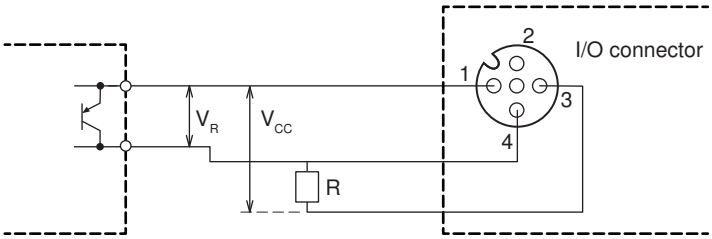

Two-wire sensor

Relation between OFF Current of the IO-Link I/O Hubs and Sensor Leakage Current

The IO-Link I/O Hubs cannot detect sensor output OFF without the following conditions met:

$I_{OFF} \geq I_{leak}$

I_{OFF}: OFF current to the input of the IO-Link I/O Hub

I_{leak}: Sensor leakage current

When I_{leak} is greater than I_{OFF}, connect a bleeder resistor R.

The bleeder resistor constant can be calculated as follows:

Select an appropriate bleeder resistor R so that both equations can be satisfied.

$R \leq (V_{OFF} / I_{OFF}) \times V_{OFF} / (I_{leak} \times (V_{OFF} / I_{OFF}) - V_{OFF})$

Rated power W of bleeder resistor $\geq (V_{CC} - V_R)^2 / R \times 4$ [allowable margin]

V_{OFF}: OFF voltage at the input of the IO-Link I/O Hub

A-3 Wiring Precautions for External Output Signal Lines

Observe the following points when wiring external output signal lines.

- To absorb counter-electromotive force when an inductive load is connected to an output signal, connect a diode near the inductive load.

Example: When pin 4 is used for output

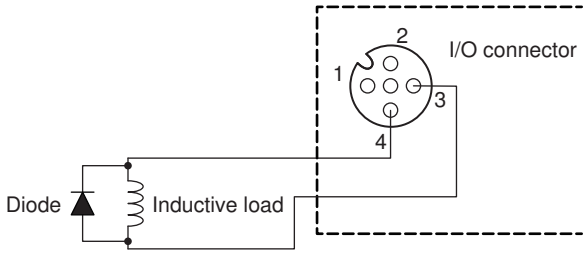

A-4 Configuration Tab Page

The following shows the IO-Link I/O Hub Configuration tab page of CX-ConfiguratorFDT.

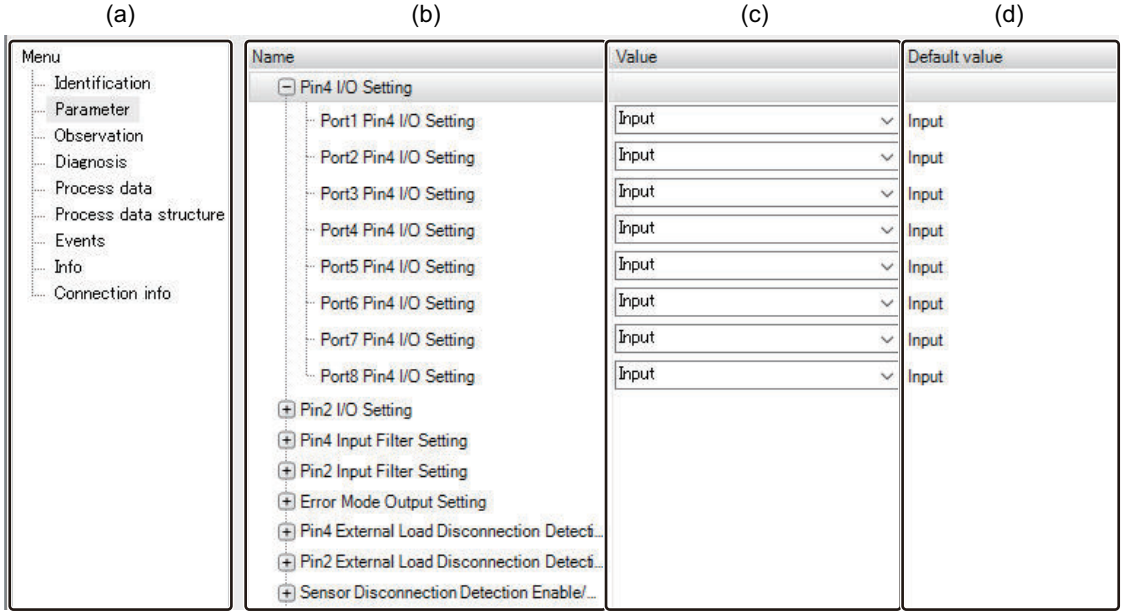

Letter	Description
(a)	From **Menu**, select **Parameter** to display the IO-Link I/O Hub Configuration tab page.
(b)	The IO-Link I/O Hub settings. To configure a setting, expand it.
(c)	The values of the settings. To configure a setting, expand it and select a value from the drop-down list.
(d)	The default values of the settings.

I

Index

Index

B

back up....9-4
baud rate....2-4
branch connector....5-17

C

C/Q....3-7
connected external devices....23
controller....1-5
current consumption from output power supply....4-5
current consumption from Unit/input power supply....4-5
CX-ConfiguratorFDT....1-6

D

degree of protection....2-2
device event type....8-10
Digital I/O Variable Hub....1-3
Digital Input Hub....1-3
DTM....23

E

EtherNet/IP scanner....1-5

H

Hardware Error....8-11
hub mounting hole....3-3, 5-2

I

I/O cable....1-6
I/O Cable Disconnection....8-11
I/O cable disconnection detection points....7-3
I/O cable short circuit detection points....7-7
I/O Cable Short-circuit....8-11
I/O connectors....3-3
I/O indicators....3-3
Input data....6-2, 6-5
inspection items....9-2
IO-Link cable....1-6
IO-Link connector....3-3
IO-Link data object....23
IO-Link device....23
IO-Link event code....8-10
IO-Link I/O Hub....23
IO-Link interface standards....6-9
IO-Link master....23
IODD....23
IODD files....1-6

M

M12 attachment....5-4
M12 torque handle....5-4

N

non-IO-Link connected external device....1-6
Non-volatile Memory Write Error....8-11

O

ON delay time....7-13
OUT P-....3-7
OUT P+....3-7
Output data....6-8
output power supply....4-2
Output Power Supply Voltage Drop....8-11

P

pin 1....3-8
pin 2....3-8
pin 3....3-8
pin 4....3-8
port....23
Port□ Status....6-4, 6-6
power supply applications....4-2
power supply types....4-2
process data....23
process input data....23, 6-2, 6-4, 8-2, 8-3
process output data....23, 6-7
protective diodes....5-12

R

restoration....9-4

S

Service Data Error....8-11
short-circuit protection....7-8
SIO (DI) Mode....23
SIO (DO) Mode....23
Smart Status....6-3, 6-5
status indicators....3-3

U

U/IN P-....3-7
U/IN P+....3-7
Unit/input power supply....4-2
Unit/Input Power Supply Voltage Drop....8-11

V

values of voltage drop in the IO-Link cable....4-7
vendor specific....6-10

OMRON Corporation **Industrial Automation Company**

Kyoto, JAPAN **Contact : www.ia.omron.com**

Regional Headquarters

OMRON EUROPE B.V.
Wegalaan 67-69, 2132 JD Hoofddorp
The Netherlands
Tel: (31) 2356-81-300 Fax: (31) 2356-81-388

OMRON ELECTRONICS LLC
2895 Greenspoint Parkway, Suite 200
Hoffman Estates, IL 60169 U.S.A.
Tel: (1) 847-843-7900 Fax: (1) 847-843-7787

OMRON ASIA PACIFIC PTE. LTD.
438B Alexandra Road, #08-01/02 Alexandra
Technopark, Singapore 119968
Tel: (65) 6835-3011 Fax: (65) 6835-3011

OMRON (CHINA) CO., LTD.
Room 2211, Bank of China Tower,
200 Yin Cheng Zhong Road,
PuDong New Area, Shanghai, 200120, China
Tel: (86) 21-6023-0333 Fax: (86) 21-5037-2388

Authorized Distributor:

©OMRON Corporation 2020-2026 All Rights Reserved.
In the interest of product improvement,
specifications are subject to change without notice.

Cat. No. W620-E1-05 1026