Cat. No. W345-E1-13

SYSMAC CS/CJ Series

CS1W-AD041-V1/AD081-V1/AD161
CS1W-DA041/DA08V/DA08C
CS1W-MAD44
CJ1W-AD041-V1/AD081-V1/AD042
CJ1W-DA021/DA041/DA08V/DA08C/DA042V
CJ1W-MAD42

Analog I/O Units

OPERATION MANUAL

OMRON

SYSMAC CS/CJ Series

CS1W-AD041-V1/AD081-V1/AD161
CS1W-DA041/DA08V/DA08C
CS1W-MAD44
CJ1W-AD041-V1/AD081-V1/AD042
CJ1W-DA021/DA041/DA08V/DA08C/DA042V
CJ1W-MAD42

Analog I/O Units

Operation Manual

Revised October 2010

Notice:

OMRON products are manufactured for use according to proper procedures by a qualified operator and only for the purposes described in this manual.

The following conventions are used to indicate and classify precautions in this manual. Always heed the information provided with them. Failure to heed precautions can result in injury to people or damage to property.

⚠ DANGER Indicates an imminently hazardous situation which, if not avoided, will result in death or serious injury. Additionally, there may be severe property damage.

⚠ WARNING Indicates a potentially hazardous situation which, if not avoided, could result in death or serious injury. Additionally, there may be severe property damage.

⚠ Caution Indicates a potentially hazardous situation which, if not avoided, may result in minor or moderate injury, or property damage.

OMRON Product References

All OMRON products are capitalized in this manual. The word “Unit” is also capitalized when it refers to an OMRON product, regardless of whether or not it appears in the proper name of the product.

The abbreviation “Ch,” which appears in some displays and on some OMRON products, often means “word” and is abbreviated “Wd” in documentation in this sense.

The abbreviation “PLC” means Programmable Controller. “PC” is used, however, in some Programming Device displays to mean Programmable Controller.

Visual Aids

The following headings appear in the left column of the manual to help you locate different types of information.

Note Indicates information of particular interest for efficient and convenient operation of the product.

1,2,3... 1. Indicates lists of one sort or another, such as procedures, checklists, etc.

© OMRON, 1999

All rights reserved. No part of this publication may be reproduced, stored in a retrieval system, or transmitted, in any form, or by any means, mechanical, electronic, photocopying, recording, or otherwise, without the prior written permission of OMRON.

No patent liability is assumed with respect to the use of the information contained herein. Moreover, because OMRON is constantly striving to improve its high-quality products, the information contained in this manual is subject to change without notice. Every precaution has been taken in the preparation of this manual. Nevertheless, OMRON assumes no responsibility for errors or omissions. Neither is any liability assumed for damages resulting from the use of the information contained in this publication.

TABLE OF CONTENTS

PRECAUTIONS xvii

1 Intended Audience xviii
2 General Precautions xviii
3 Safety Precautions xviii
4 Operating Environment Precautions xix
5 Application Precautions xx
6 Conformance to EC Directives xxi

SECTION 1
System Design 1

1-1 Features and Functions 2
1-2 Basic Configuration 11
1-3 Function Applications 16

SECTION 2
CS-series Analog Input Units
(CS1W-AD041-V1/081-V1/161) 17

2-1 Specifications 18
2-2 Operating Procedure 24
2-3 Components and Switch Settings 31
2-4 Wiring 36
2-5 Exchanging Data with the CPU Unit 42
2-6 Analog Input Functions and Operating Procedures 56
2-7 Adjusting Offset and Gain 64
2-8 Handling Errors and Alarms 73

SECTION 3
CJ-series Analog Input Units
(CJ1W-AD041-V1/081-V1) 81

3-1 Specifications 82
3-2 Operating Procedure 87
3-3 Components and Switch Settings 93
3-4 Wiring 97
3-5 Exchanging Data with the CPU Unit 101
3-6 Analog Input Functions and Operating Procedures 108
3-7 Adjusting Offset and Gain 116
3-8 Handling Errors and Alarms 124

TABLE OF CONTENTS

SECTION 4
CJ-series Analog Input Units (CJ1W-AD042) 131

4-1 Specifications 132
4-2 Operating Procedure 137
4-3 Components and Switch Settings 142
4-4 Wiring 144
4-5 Exchanging Data with the CPU Unit 149
4-6 Analog Input Functions and Operating Procedures 157
4-7 Handling Errors and Alarms 166

SECTION 5
CS-series Analog Output Units (CS1W-DA041/08V/08C) 173

5-1 Specifications 174
5-2 Operating Procedure 178
5-3 Components and Switch Settings 184
5-4 Wiring 187
5-5 Exchanging Data with the CPU Unit 190
5-6 Analog Output Functions and Operating Procedures 197
5-7 Adjusting Offset and Gain 201
5-8 Handling Errors and Alarms 211

SECTION 6
CJ-series Analog Output Unit (CJ1W-DA021/041/08V/08C) 217

6-1 Specifications 218
6-2 Operating Procedure 222
6-3 Components and Switch Settings 230
6-4 Wiring 232
6-5 Exchanging Data with the CPU Unit 236
6-6 Analog Output Functions and Operating Procedures 245
6-7 Adjusting Offset and Gain 252
6-8 Handling Errors and Alarms 263

SECTION 7
CJ-series Analog Output Unit (CJ1W-DA042V) 269

7-1 Specifications 270
7-2 Operating Procedure 274
7-3 Components and Switch Settings 278
7-4 Wiring 280
7-5 Exchanging Data with the CPU Unit 283
7-6 Analog Output Functions and Operating Procedures 289
7-7 Handling Errors and Alarms 296

TABLE OF CONTENTS

SECTION 8
CS-series Analog I/O Unit (CS1W-MAD44) 301

8-1 Specifications 302
8-2 Operating Procedure 310
8-3 Components and Switch Settings 317
8-4 Wiring 320
8-5 Exchanging Data with the CPU Unit 324
8-6 Analog Input Functions and Operating Procedures 332
8-7 Analog Output Functions and Operating Procedures 339
8-8 Ratio Conversion Function 342
8-9 Adjusting Offset and Gain 345
8-10 Handling Errors and Alarms 361

SECTION 9
CJ-series Analog I/O Unit (CJ1W-MAD42) 369

9-1 Specifications 370
9-2 Operating Procedure 377
9-3 Components and Switch Settings 384
9-4 Wiring 387
9-5 Exchanging Data with the CPU Unit 391
9-6 Analog Input Functions and Operating Procedures 400
9-7 Analog Output Functions and Operating Procedures 409
9-8 Ratio Conversion Function 415
9-9 Adjusting Offset and Gain 418
9-10 Handling Errors and Alarms 434

Appendices

A Dimensions 441
B Sample Programs 445
C Data Memory Coding Sheets 455
D Execution Times for Special Instructions for the CJ1W-AD042/-DA042V 481

Index 483

Revision History 489

About this Manual:

This manual describes the installation and operation of the CS1W-AD041-V1, CS1W-AD081-V1, CS1W-AD161, CJ1W-AD041-V1, CJ1W-AD081-V1, and CJ1W-AD042 Analog Input Units; the CS1W-DA041, CS1W-DA08V, CS1W-DA08C, CJ1W-DA021, CJ1W-DA041, CJ1W-DA08V, CJ1W-DA08C, and CJ1W-DA042V Analog Output Units; and the CS1W-MAD44 and CJ1W-MAD42 Analog I/O Units. This manual includes the sections described below.

The input function of CS/CJ-series Analog I/O Units converts analog sensor output to the digital format and transmits it to CS/CJ-series PLCs. The output function converts digital data from the PLC to the analog format for output.

Please read this manual and the other manuals related to the CS/CJ-series Analog I/O Units carefully and be sure you understand the information provided before attempting to install and operate the Units. The manuals used with the CS/CJ-series Analog I/O Units are listed in the following table. The suffixes have been omitted from the catalog numbers. Be sure you are using the most recent version for your area.

Name	Cat. No.	Contents
SYSMAC CS/CJ-series Analog I/O Units Operation Manual CS1W-AD041-V1/AD081-V1/AD161, CS1W-DA041/DA08V/DA08C, CS1W-MAD44, CJ1W-AD041-V1/AD081-V1, CJ1W-AD042, CJ1W-DA021/DA041/DA08V/DA08C, CJ1W-DA042V, CJ1W-MAD42	W345 (this manual)	Describes the application methods of the CS/CJ-series Analog Input, Analog Output, and Analog I/O Units.
CJ-series CJ3 CPU Unit Hardware User's Manual CJ3M-CPU6□□	W664	Provides the following information on PLCs built with CJ3 CPU Units: • Overview • System design • System configuration • Maintenance
CJ-series CJ2 CPU Unit Hardware User's Manual CJ2H-CPU6□-EIP, CJ2H-CPU6□	W472	Provides the following information on PLCs built with CJ2 CPU Units: • Overview • System design • System configuration • Maintenance
CJ-series CJ2/CJ3 CPU Unit Software User's Manual CJ2H-CPU6□-EIP, CJ2H-CPU6□, CJ3M-CPU□□	W473	Provides the following information on PLCs built with CJ2/CJ3 CPU Units: • Overview of CPU Unit operation • Programming • System startup • Details on devices • Troubleshooting
SYSMAC CS-series Programmable Controllers Operation Manual CS1G/H-CPU□□-EV1, CS1G/H-CPU□□H	W339	Describes the installation and operation of the CS-series PLCs.
SYSMAC CS Series CS1D Duplex System Operation Manual CS1D-CPU□□H CPU Units, CS1D-CPU□□S CPU Units, CS1D-DPL01 Duplex Unit, CS1D-PA/PD□□□ Power Supply Unit	W405	Provides an outline of and describes the design, installation, maintenance, and other basic operations for a Duplex System based on CS1D CPU Units.
CJ-series PLCs Operation Manual CJ1H-CPU□□H-R, CJ1G/H-CPU□□H, CJ1G-CPU□□P, CJ1G-CPU□□, CJ1H-CPU□□	W393	Provides the following information on CJ-series PLCs: • Overview and features • System configuration design • Installation and wiring • I/O memory allocations • Troubleshooting

Name	Cat. No.	Contents
CS/CJ/NSJ-series PLCs Programming Manual CS1G/H-CPU□□H, CS1G/H-CPU□□-V1, CS1D-CPU□□H, CS1D-CPU□□S, CJ1H-CPU□□H-R, CJ1G/H-CPU□□H, CJ1G-CPU□□P, CJ1M-CPU□□, CJ1G-CPU□□, NSJ□-□□□□(B)-G5D, NSJ□-□□□□(B)-M3D	W394	Provides the following information on CS/CJ/NSJ-series PLCs: • Programming • Task functions • File memory • Various operations
CS/CJ/NSJ-series PLCs Instructions Reference Manual CJ2H-CPU6□-EIP, CJ2H-CPU6□, CS1G/H-CPU□□H, CS1G/H-CPU□□-V1, CS1D-CPU□□H, CS1D-CPU□□S, CJ1H-CPU□□H-R, CJ1G/H-CPU□□H, CJ1G-CPU□□P, CJ1M-CPU□□, CJ1G-CPU□□, NSJ□-□□□□(B)-G5D, NSJ□-□□□□(B)-M3D	W474	Describes all the ladder programming instructions in detail.
CX-Programmer Operation Manual (Version 8.□) WS02-CXPC□-V8	W446	Describes how to use the CX-Programmer.
SYSMAC CS/CJ-series Programming Consoles Operation Manual CQM1H-PRO01, CQM1-PRO01, C200H-PRO27 + CS1W-KS001	W341	Describes how to use the Programming Console.

Section 1 describes the features and system configurations of the CS/CJ-series Analog I/O Unit.

Section 2 explains how to use the CS1W-AD041-V1/081-V1/161 Analog Input Units.

Section 3 explains how to use the CJ1W-AD041-V1/081-V1 Analog Input Units.

Section 4 explains how to use the CJ1W-AD042 Analog Input Units.

Section 5 explains how to use the CS1W-DA041/08V/08C Analog Output Units.

Section 6 explains how to use the CJ1W-DA021/041/08V/08C Analog Output Units.

Section 7 explains how to use the CJ1W-DA042V Analog Output Units.

Section 8 explains how to use the CS1W-MAD44 Analog I/O Unit.

Section 9 explains how to use the CJ1W-MAD42 Analog I/O Unit.

Appendix A provides details on dimensions.

Appendix B gives programming examples.

Appendix C provides data memory coding sheets.

⚠ **WARNING** Failure to read and understand the information provided in this manual may result in personal injury or death, damage to the product, or product failure. Please read each section in its entirety and be sure you understand the information provided in the section and related sections before attempting any of the procedures or operations given.

Read and Understand this Manual

Please read and understand this manual before using the product. Please consult your OMRON representative if you have any questions or comments.

Warranty and Limitations of Liability

WARRANTY
OMRON's exclusive warranty is that the products are free from defects in materials and workmanship for a period of one year (or other period if specified) from date of sale by OMRON. OMRON MAKES NO WARRANTY OR REPRESENTATION, EXPRESS OR IMPLIED, REGARDING NON-INFRINGEMENT, MERCHANTABILITY, OR FITNESS FOR PARTICULAR PURPOSE OF THE PRODUCTS. ANY BUYER OR USER ACKNOWLEDGES THAT THE BUYER OR USER ALONE HAS DETERMINED THAT THE PRODUCTS WILL SUITABLY MEET THE REQUIREMENTS OF THEIR INTENDED USE. OMRON DISCLAIMS ALL OTHER WARRANTIES, EXPRESS OR IMPLIED.

LIMITATIONS OF LIABILITY
OMRON SHALL NOT BE RESPONSIBLE FOR SPECIAL, INDIRECT, OR CONSEQUENTIAL DAMAGES, LOSS OF PROFITS OR COMMERCIAL LOSS IN ANY WAY CONNECTED WITH THE PRODUCTS, WHETHER SUCH CLAIM IS BASED ON CONTRACT, WARRANTY, NEGLIGENCE, OR STRICT LIABILITY. In no event shall the responsibility of OMRON for any act exceed the individual price of the product on which liability is asserted. IN NO EVENT SHALL OMRON BE RESPONSIBLE FOR WARRANTY, REPAIR, OR OTHER CLAIMS REGARDING THE PRODUCTS UNLESS OMRON'S ANALYSIS CONFIRMS THAT THE PRODUCTS WERE PROPERLY HANDLED, STORED, INSTALLED, AND MAINTAINED AND NOT SUBJECT TO CONTAMINATION, ABUSE, MISUSE, OR INAPPROPRIATE MODIFICATION OR REPAIR.

Application Considerations

SUITABILITY FOR USE

OMRON shall not be responsible for conformity with any standards, codes, or regulations that apply to the combination of products in the customer's application or use of the products.

At the customer's request, OMRON will provide applicable third party certification documents identifying ratings and limitations of use that apply to the products. This information by itself is not sufficient for a complete determination of the suitability of the products in combination with the end product, machine, system, or other application or use.

The following are some examples of applications for which particular attention must be given. This is not intended to be an exhaustive list of all possible uses of the products, nor is it intended to imply that the uses listed may be suitable for the products:

- Outdoor use, uses involving potential chemical contamination or electrical interference, or conditions or uses not described in this manual.
- Nuclear energy control systems, combustion systems, railroad systems, aviation systems, medical equipment, amusement machines, vehicles, safety equipment, and installations subject to separate industry or government regulations.
- Systems, machines, and equipment that could present a risk to life or property.

Please know and observe all prohibitions of use applicable to the products.

NEVER USE THE PRODUCTS FOR AN APPLICATION INVOLVING SERIOUS RISK TO LIFE OR PROPERTY WITHOUT ENSURING THAT THE SYSTEM AS A WHOLE HAS BEEN DESIGNED TO ADDRESS THE RISKS, AND THAT THE OMRON PRODUCTS ARE PROPERLY RATED AND INSTALLED FOR THE INTENDED USE WITHIN THE OVERALL EQUIPMENT OR SYSTEM.

PROGRAMMABLE PRODUCTS

OMRON shall not be responsible for the user's programming of a programmable product, or any consequence thereof.

Disclaimers

CHANGE IN SPECIFICATIONS

Product specifications and accessories may be changed at any time based on improvements and other reasons.

It is our practice to change model numbers when published ratings or features are changed, or when significant construction changes are made. However, some specifications of the products may be changed without any notice. When in doubt, special model numbers may be assigned to fix or establish key specifications for your application on your request. Please consult with your OMRON representative at any time to confirm actual specifications of purchased products.

DIMENSIONS AND WEIGHTS

Dimensions and weights are nominal and are not to be used for manufacturing purposes, even when tolerances are shown.

PERFORMANCE DATA

Performance data given in this manual is provided as a guide for the user in determining suitability and does not constitute a warranty. It may represent the result of OMRON's test conditions, and the users must correlate it to actual application requirements. Actual performance is subject to the OMRON Warranty and Limitations of Liability.

ERRORS AND OMISSIONS

The information in this manual has been carefully checked and is believed to be accurate; however, no responsibility is assumed for clerical, typographical, or proofreading errors, or omissions.

PRECAUTIONS

This section provides general precautions for using the Programmable Controller (PLC) and Analog I/O Units.

The information contained in this section is important for the safe and reliable application of the Analog I/O Unit. You must read this section and understand the information contained before attempting to set up or operate a PLC system and Analog I/O Unit.

1 Intended Audience xviii
2 General Precautions xviii
3 Safety Precautions xviii
4 Operating Environment Precautions xix
5 Application Precautions xx
6 Conformance to EC Directives xxi

1 Intended Audience

This manual is intended for the following personnel, who must also have knowledge of electrical systems (an electrical engineer or the equivalent).

- Personnel in charge of installing FA systems
- Personnel in charge of designing FA systems
- Personnel in charge of managing FA systems and facilities

2 General Precautions

The user must operate the product according to the performance specifications described in the operation manuals.

Before using the product under conditions which are not described in the manual or applying the product to nuclear control systems, railroad systems, aviation systems, vehicles, combustion systems, medical equipment, amusement machines, safety equipment, and other systems, machines, and equipment that may have a serious influence on lives and property if used improperly, consult your OMRON representative.

Make sure that the ratings and performance characteristics of the product are sufficient for the systems, machines, and equipment, and be sure to provide the systems, machines, and equipment with double safety mechanisms.

This manual provides information for programming and operating OMRON Analog I/O Units. Be sure to read this manual before attempting to use the software and keep this manual close at hand for reference during operation.

⚠ **WARNING** It is extremely important that a PLC and all PLC Units be used for the specified purpose and under the specified conditions, especially in applications that can directly or indirectly affect human life. You must consult with your OMRON representative before applying a PLC System to the above-mentioned applications.

⚠ **WARNING** Do not apply the voltage/current outside the specified range to any Unit. It may cause a malfunction or fire.

3 Safety Precautions

⚠ **WARNING** Do not attempt to take any Unit apart or touch any internal parts while power is being supplied. Doing so may result in electric shock.

⚠ **WARNING** Do not touch any of the terminals or terminal blocks while power is being supplied. Doing so may result in electric shock.

⚠ **WARNING** Provide safety measures in external circuits (i.e., not in the Programmable Controller), including the following items, in order to ensure safety in the system if an abnormality occurs due to malfunction of the PLC or another external factor affecting the PLC operation. Not doing so may result in serious accidents.

- Emergency stop circuits, interlock circuits, limit circuits, and similar safety measures must be provided in external control circuits.

- The PLC will turn OFF all outputs when its self-diagnosis function detects any error or when a severe failure alarm (FALS) instruction is executed. Unexpected operation, however, may still occur for errors in the I/O control section, errors in I/O memory, and other errors that cannot be detected by the self-diagnosis function. As a countermeasure for such errors, external safety measures must be provided to ensure safety in the system.
- The PLC outputs may remain ON or OFF due to deposition or burning of the output relays or destruction of the output transistors. As a countermeasure for such problems, external safety measures must be provided to ensure safety in the system.

⚠ **WARNING** When the 24-VDC output (service power supply to the PLC) is overloaded or short-circuited, the voltage may drop and result in the outputs being turned OFF. As a countermeasure for such problems, external safety measures must be provided to ensure safety in the system.

⚠ **Caution** When wiring crossovers between terminals, the total current for both terminals will flow in the line. Check the current capacities of all wires before wiring crossovers.

⚠ **Caution** Tighten the screws on the terminal block of the AC Power Supply Unit to the torque specified in the operation manual. The loose screws may result in burning or malfunction.

⚠ **Caution** Execute online edit only after confirming that no adverse effects will be caused by extending the cycle time. Otherwise, the input signals may not be readable.

⚠ **Caution** With the CJ1W-AD042/-DA042V, always connect surge suppressors to inductive loads in the system (e.g., magnetic contactors, relays, and solenoids). Always separate devices that generate surge from the Analog I/O Units. Faulty Unit operation may cause unexpected system operation.

4 Operating Environment Precautions

⚠ **Caution** Do not operate the control system in the following places:

- Locations subject to direct sunlight.
- Locations subject to temperatures or humidity outside the range specified in the specifications.
- Locations subject to condensation as the result of severe changes in temperature.
- Locations subject to corrosive or flammable gases.
- Locations subject to dust (especially iron dust) or salts.
- Locations subject to exposure to water, oil, or chemicals.
- Locations subject to shock or vibration.

⚠ **Caution** Take appropriate and sufficient countermeasures when installing systems in the following locations:

- Locations subject to static electricity or other forms of noise.
- Locations subject to strong electromagnetic fields.
- Locations subject to possible exposure to radioactivity.
- Locations close to power lines.

⚠ **Caution** The operating environment of the PLC System can have a large effect on the longevity and reliability of the system. Improper operating environments can lead to malfunction, failure, and other unforeseeable problems with the PLC System. Be sure that the operating environment is within the specified conditions at installation and remains within the specified conditions during the life of the system.

5 Application Precautions

Observe the following precautions when using the PLC.

⚠ **WARNING** Always heed these precautions. Failure to abide by the following precautions could lead to serious or possibly fatal injury.

- Always connect to a class-3 ground (to 100 Ω or less) when installing the Units. Not connecting to a class-3 ground may result in electric shock.
- Always turn OFF the power supply to the PLC before attempting any of the following. Not turning off the power supply may result in malfunction or electric shock.
  - Mounting or dismounting I/O Units, CPU Units, Memory Cassettes, or any other Units.
  - Assembling the Units.
  - Setting DIP switch or rotary switches.
  - Connecting or wiring the cables.
  - Connecting or disconnecting the connectors.

⚠ **Caution** Failure to abide by the following precautions could lead to faulty operation of the PLC or the system, or could damage the PLC or PLC Units. Always heed these precautions.

- Always use the power supply voltage specified in this manual. An incorrect voltage may result in malfunction or burning.
- Take appropriate measures to ensure that the specified power with the rated voltage and frequency is supplied. Be particularly careful in places where the power supply is unstable. An incorrect power supply may result in malfunction.
- Install external breakers and take other safety measures against short-circuiting in external wiring. Insufficient safety measures against short-circuiting may result in burning.
- Do not apply voltages to input sections in excess of the rated input voltage. Excess voltages may result in burning.
- Do not apply voltages or connect loads in excess of the maximum switching capacity to output sections. Excess voltage or loads may result in burning.

- Tighten the PLC terminal screws and cable screws to the torque specified in this manual.
- Wiring correctly, as indicated in this manual.
- Do not attempt to disassemble, repair, or modify any Units.
- Be sure to confirm that the DIP switch and the data memory (DM) are properly set.
- Leave the label attached to the Unit when wiring. Removing the label may result in malfunction.
- Remove the labels after the completion of wiring to ensure proper heat dissipation. Leaving the label attached may result in malfunction.
- Do not pull on cables and cords and do not bend them past their natural bending radius.
- Do not place any heavy objects on cables or cords.
- Mount the Unit only after checking the terminal block completely.
- Be sure that the terminal blocks, connectors, Memory Units, expansion cables, and other items with locking devices are properly locked into place.
- Check the user program for proper execution before actually running it on the Unit. Not checking the program may result in an unexpected operation.
- Use crimp terminals for wiring. Do not connect bare stranded wires directly to terminals. Connection of bare stranded wires may result in burning.
- Sufficiently confirm wiring, switch settings, and data set in the DM Area before turn ON the power supply.
- Confirm that no adverse effect will occur in the system before attempting any of the following. Not doing so may result in an unexpected operation.
  - Changing the operating mode of the PLC (including the setting of the startup operating mode).
  - Force-setting/force-resetting any bit in memory.
  - Changing the present value of any word or any set value in memory.
- Touch a grounded metal object to discharge static electricity from your body before touching any Unit.
- After replacing a CPU Unit, Special I/O Unit, CPU Bus Unit, or externally connected device, resume operation only after transferring to the new CPU Unit the contents of the DM Area, HR Area, and other data required for resuming operation, such as the program and parameters.
- The Analog I/O Units comply with the EMC Directive when assembled into a complete PLC system. Refer to the relevant product manuals for the conditions under which the EMC Directive are met, including grounding and cables.
- This is a class A product. In residential areas, it may cause radio interference. If radio interference occurs, the user may be required to take adequate measures to reduce interference.

6 Conformance to EC Directives

Applicable Directives

- EMC Directives
- Low Voltage Directive

Concepts

■ **EMC Directives**

OMRON supplies electric devices that are used built into other devices or manufacturing equipment. These OMRON products are designed to conform to the related EMC standards (see note) so that the devices or equipment in which they are used can more easily conform to EMC standards.

EMC-related performance of the OMRON devices that conform to EC Directives will vary depending on the configuration, wiring, and other conditions of the equipment or control panel on which the OMRON devices are installed. The customer must, therefore, perform the final check to confirm that devices and the overall machine conform to EMC standards.

Note Applicable EMC (Electromagnetic Compatibility) standards are as follows:
EMC (Electromagnetic Susceptibility)
CS-series PLCs: EN 61131-2 (CS1W-AD161: EN 61000-6-2)
CJ-series PLCs: EN 61000-6-2
EMI (Electromagnetic Interference)
CS-series PLCs: EN 61131-2 (CS1W-AD161: EN 61000-6-4)
CJ-series PLCs: EN 61000-6-4

■ **Low Voltage Directive**

Always ensure that devices operating at voltages of 50 to 1,000 V AC and 75 to 1,500 V DC meet the required safety standards for the PLC (EN 61131-2.)

Conformance to EC Directives

CS/CJ-series products conform to EC Directives. However, the following precautions must be observed to ensure that the machine or device in which the CS/CJ-series PLC is used conforms to EC Directives:

1. The CS/CJ-series PLC must be installed within a control panel.
2. You must use reinforced insulation or double insulation for the DC power supplies used for the I/O power supplies. The DC power supply connected to the power supply terminals on PLCs using DC power must have an output hold time of at least 10 ms.
3. CS/CJ-series products conforming to EC Directives also conform to EN 61000-6-4 for EMI. Radiated emission characteristics (10-m regulations) may vary depending on the configuration of the control panel used, other devices connected to the control panel, wiring, and other conditions. You must therefore confirm that the overall machine or equipment conforms to EC Directives even when using CS/CJ-series products that conform to EC Directives.

Conditions for Conforming to EMC Directives

The following immunity test conditions apply to CS/CJ-series Analog I/O Units.

Overall Accuracy

Analog Input Unit	CS1W-AD161	+4%/–6%
	CJ1W-AD041-V1/AD081-V1	+3%/–6%
	CJ1W-AD042	+6%/–6%
Analog Output Units	CJ1W-DA021/DA041	+4%/–1%
	CJ1W-DA08V/DA08C	+4%/–4%
	CJ1W-DA042V	+4.5%/–4.5%
Analog I/O Unit	CS1W-MAD44	+2%/–1%
	CJ1W-MAD42	+4%/–4%

Use shielded twisted-pair cable to connect analog inputs and connect the shield on the input line to the AG terminal.

SECTION 1
System Design

This section describes the features and system configurations of CS/CJ-series Analog I/O Units.

1-1 Features and Functions 2
1-2 Basic Configuration 11
1-2-1 Mounting Procedure 13
1-2-2 Precautions 15
1-3 Function Applications 16

1-1 Features and Functions

CS-series Analog I/O Units

Analog Input Units **Analog Output Units** **Analog I/O Unit**

CS1W-AD041-V1 CS1W-AD081-V1 CS1W-AD161 CS1W-DA041 CS1W-DA08V CS1W-DA08C CS1W-MAD44

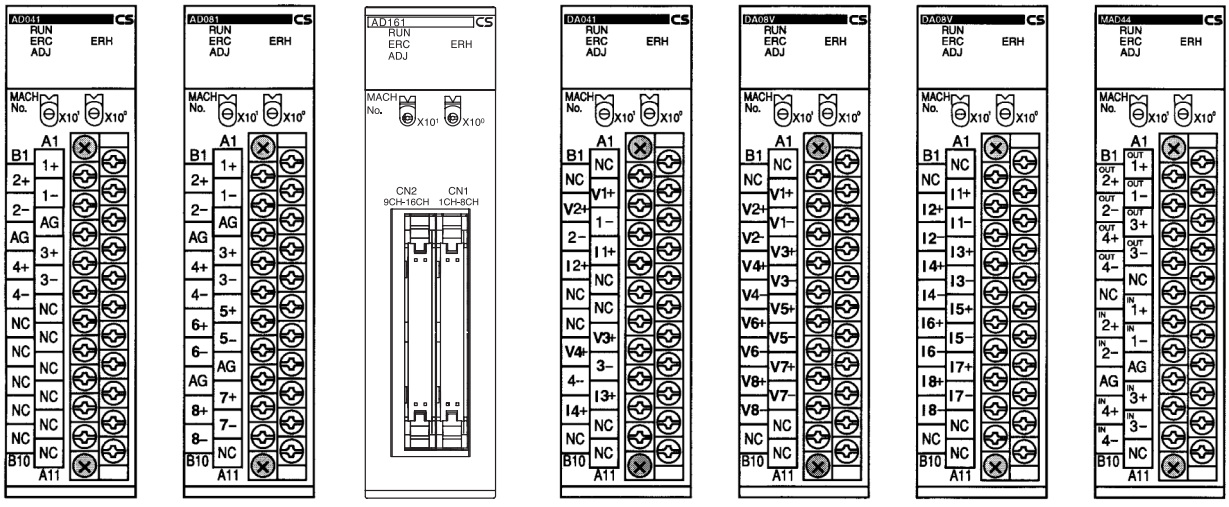

The SYSMAC CS Series includes CS1W-AD041-V1, CS1W-AD081-V1, and CS1W-AD161 Analog Input Units that convert analog signals to digital signals and transfer them to CS-series CPU Units, and CS1W-DA041, CS1W-DA08V, and CS1W-DA08C Analog Output Units for converting digital data in CS-series CPU Units into analog signals for output, and CS1W-MAD44 Analog I/O Units that have both analog input and output functions.

Unit		Analog input		Analog output	
		Maximum input points	Input signal range	Maximum output points	Output signal range
Analog Input Units	CS1W-AD041-V1	4	–10 to 10 V 0 to 10 V 0 to 5 V 1 to 5 V 4 to 20 mA	---	---
	CS1W-AD081-V1	8			
	CS1W-AD161	16			
Analog Output Units	CS1W-DA041	---	---	4	–10 to 10 V 0 to 10 V 0 to 5 V 1 to 5 V 4 to 20 mA
	CS1W-DA08V			8	–10 to 10 V 0 to 10 V 0 to 5 V 1 to 5 V
	CS1W-DA08C			8	4 to 20 mA
Analog I/O Units	CS1W-MAD44	4	–10 to 10 V 0 to 10 V 0 to 5 V 1 to 5 V 4 to 20 mA	4	–10 to 10 V 0 to 10 V 0 to 5 V 1 to 5 V

CJ-series Analog I/O Units

Analog Input Unit

CJ1W-AD041-V1
CJ1W-AD081-V1

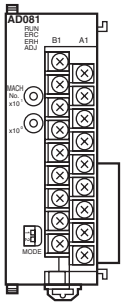

Analog Output Unit

CJ1W-DA021
CJ1W-DA041

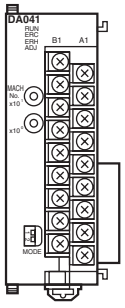

CJ1W-DA08V
CJ1W-DA08C

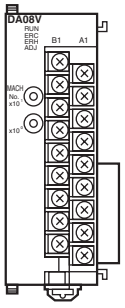

Analog I/O Unit

CJ1W-MAD42

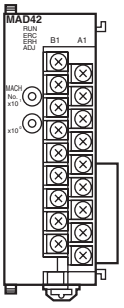

CJ1W-AD042

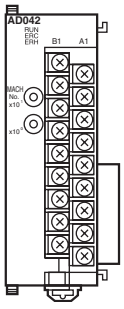

CJ1W-DA042V

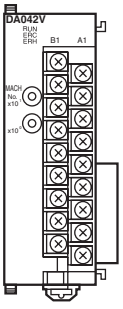

The SYSMAC CJ Series includes CJ1W-AD041-V1, CS1W-AD081-V1, and CJ1W-AD042 Analog Input Units that convert analog signals to digital signals and transfer them to CJ-series CPU Units, and CJ1W-DA041, CS1W-DA021, and CJ1W-DA042V Analog Output Units for converting digital data from CJ-series CPU Units into analog signals for output.

The main specifications are listed in the following table.

Unit		Analog input		Analog output		Conversion period
		Maximum input points	Input signal range	Maximum output points	Output signal range	
Analog Input Units	CJ1W-AD041-V1	4	–10 to 10 V 0 to 10 V 0 to 5 V 1 to 5 V 4 to 20 mA	---	---	1 ms/point (Can be set to 250 μs/point.)
	CJ1W-AD081-V1	8				
	CJ1W-AD042	4	–10 to 10 V 0 to 10 V –5 to 5 V 1 to 5 V 4 to 20 mA			20 μs for 1point 25 μs for 2 points 30 μs for 3 points 35 μs for 4 points

Unit		Analog input		Analog output		Conversion period
		Maximum input points	Input signal range	Maximum output points	Output signal range	
Analog Output Units	CJ1W-DA041	---	---	4	–10 to 10 V 0 to 10 V 0 to 5 V 1 to 5 V 4 to 20 mA	1 ms/point
	CJ1W-DA021			2		
	CJ1W-DA08V			8	–10 to 10 V 0 to 10 V 0 to 5 V 1 to 5 V	1 ms/point (Can be set to 250 μs/point.)
	CJ1W-DA08C			8	4 to 20 mA	
	CJ1W-DA042V			4	–10 to 10 V 0 to 10 V 1 to 5 V	20 μs for 1point 25 μs for 2 points 30 μs for 3 points 35 μs for 4 points
Analog I/O Units	CJ1W-MAD42	4	–10 to 10 V 0 to 10 V 0 to 5 V 1 to 5 V 4 to 20 mA	2	–10 to 10 V 0 to 10 V 0 to 5 V 1 to 5 V 4 to 20 mA	1 ms/point (Can be set to 500 μs/point.)

Note The input signal range or output signal range can be set separately for each input or output.

Unit support for functions is shown in the following table.

Unit		Input disconnection detection	Peak value hold	Output hold	Mean value processing	Proportional conversion	Offset and gain adjustment	Scaling	Direct conversion
Analog Input Units	CJ1W-AD041-V1	Supported.	Supported.	Not supported.	Supported.	Not supported.	Supported.	Not supported.	Not supported.
	CJ1W-AD081-V1	Supported.	Supported.	Not supported.	Supported.	Not supported.	Supported.	Not supported.	Not supported.
	CJ1W-AD042	Supported.	Supported.	Not supported.	Supported.	Not supported.	Not supported.	Supported.	Supported.
Analog Output Units	CJ1W-DA041	Not supported.	Not supported.	Supported.	Not supported.	Not supported.	Supported.	Not supported.	Not supported.
	CJ1W-DA021	Not supported.	Not supported.	Supported.	Not supported.	Not supported.	Supported.	Not supported.	Not supported.
	CJ1W-DA08V	Not supported.	Not supported.	Supported.	Not supported.	Not supported.	Supported.	Supported.	Not supported.
	CJ1W-DA08C	Not supported.	Not supported.	Supported.	Not supported.	Not supported.	Supported.	Supported.	Not supported.
	CJ1W-DA042V	Not supported.	Not supported.	Supported.	Not supported.	Not supported.	Not supported.	Supported.	Supported.
Analog I/O Units	CJ1W-MAD42	Supported.	Supported.	Supported.	Supported.	Supported.	Supported.	Supported.	Not supported.

Input Disconnection Detection Function

The input disconnection detection function can be used for analog inputs within an input signal range of 1 to 5 V (4 to 20 mA). Any input under 0.3 V (1.2 mA) will be regarded as a disconnection. For details, refer to *2-6-5*, *3-6-5*, *4-6-6*, *8-6-4* or *9-6-6*.

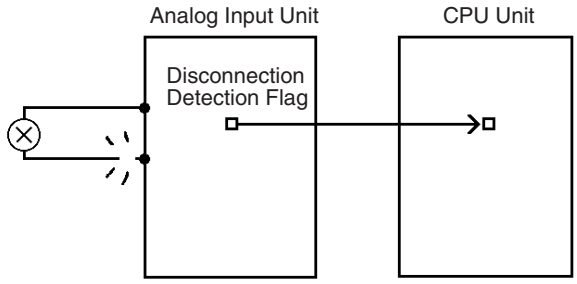

Peak Value Hold Function

The peak value hold function holds the maximum digital conversion value for every input (including mean value processing). This function can be used with analog input. The following diagram shows how digital conversion values are affected when the peak value hold function is used. For details, refer to *2-6-4*, *3-6-4*, *4-6-5*, *8-6-3* or *9-6-4*.

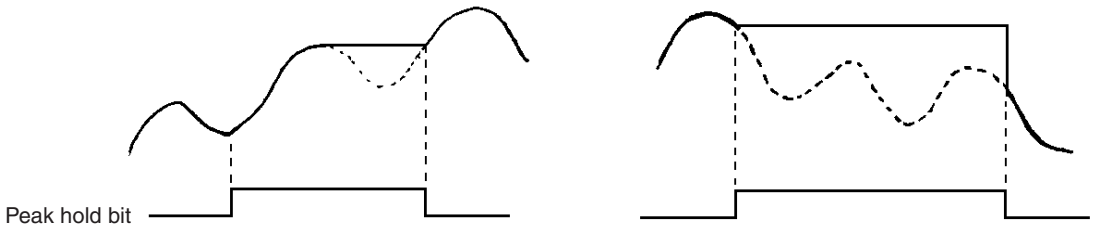

Output Hold Function

The output hold function can be used to hold the analog output value at any preset value when there is a fatal error at the CPU Unit or when specified by the CPU Unit. When output is stopped, CLR, HOLD, or MAX can be selected for output. For details, refer to *5-6-3*, *6-6-4*, *7-6-3*, *8-7-2* or *9-7-3*.

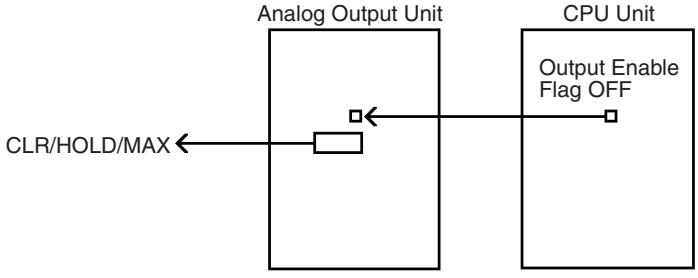

Mean Value Function

The mean value function can be used to remove erroneous values that occur due to factors such as noise that is included in analog inputs. The operating mean is taken without affecting the data refresh cycle. For details, refer to *2-6-3*, *3-6-3*, *4-6-3*, *8-6-2* or *9-6-3*.

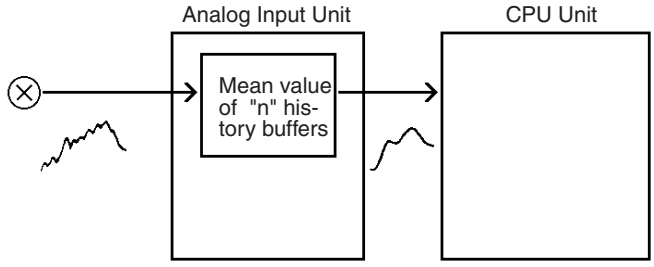

Ratio Conversion Function

The CS1W-MAD44 and CJ1W-MAD42 Analog I/O Unit can output in analog format the results of analog inputs calculated for ratio and bias. For details, refer to *8-8* or *9-8*.

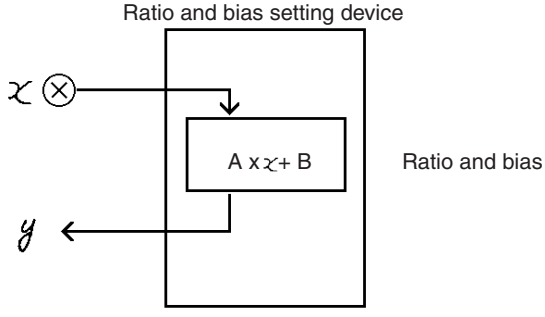

Offset and Gain Adjustment Function

The A/D and D/A converter offset deviation and gain deviation can be adjusted for each input and output. The offset and gain adjustments are made with the Unit set for the adjustment mode, and the adjustment values are stored in the Unit's built-in EEPROM. For details, refer to *2-7*, *3-7*, *5-7*, *6-7*, *8-9* or *9-9*.

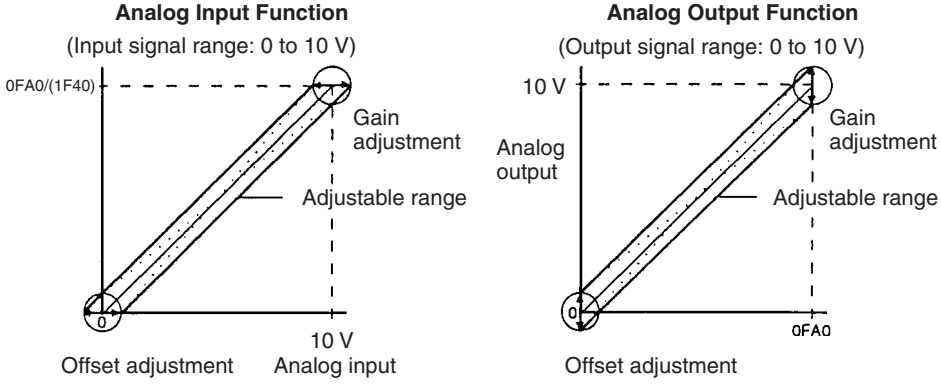

Scaling Function

Refer to *4-6-4*, *6-6-5*, *7-6-4*, *9-6-5* and *9-7-4*.

With CS1W-AD042 Analog Input Units (See note 1.), CJ1W-DA08V/08C/042V Analog Output Units (See note 2.), and CJ1W-MAD42 Analog I/O Units, input analog values and output analog set values can be automatically converted into user-specified units. This scaling function eliminates the previous need to provide programs (e.g., scaling using the SCL instruction) for numeric conversion to different units.

When upper and lower limits have been preset in 16-bit binary data in the CPU Unit's DM Area, within a decimal range of –32,000 to +32,000, input

analog values and output analog set values can be automatically converted into user-specified units. (See note 3.) (Two's complements are used for negative analog input conversion values and analog output set values.)

Note

1. Only input scaling is supported by CJ1W-AD042 Analog Input Units.
2. Only output scaling is supported by CJ1W-DA08V/08C/042V Analog Output Units.
3. With the CJ1W-DA08V/08C Analog Output Unit and CJ1W-MAD42 Analog I/O Unit, scaling is possible only for a conversion period of 1 ms and a resolution of 4,000. The scaling function is not enabled for a conversion time of 250 μs (500 μs for the CJ1W-MAD42) and a resolution of 8,000.

Conceptual Diagram of Scaling (CJ1M-MAD42 Only)

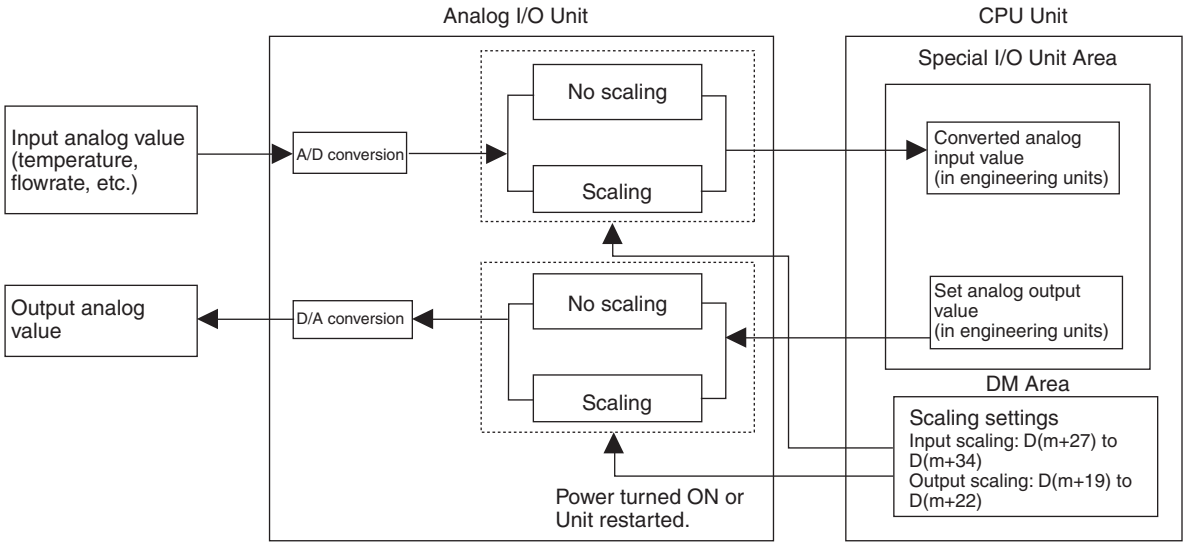

Direct Conversion

Refer to pages 158 and 291.

Direct conversion can be used with the CJ1W-AD042 Analog Input Unit and CJ1W-DA042V Analog Output Unit. Direct conversion can be used to immediately perform conversion for an Analog Input Unit or Analog Output Unit and at the same time read or output the conversion data. With the CJ1W-AD042 Analog Input Unit, A/D conversion is performed and the converted value is refreshed immediately when the ANALOG INPUT DIRECT CONVERSION (AIDC) instruction is executed. With the CJ1W-DA042V Analog Output Unit, the conversion set value is refreshed and D/A conversion is performed immediately when the ANALOG OUTPUT DIRECT CONVERSION (AODC) instruction is executed. A CJ2H-CPU□□(-EIP) CPU Unit with unit version 1.1 or later/a CJ2M/CJ3M-CPU□□ is required to use direct conversion.

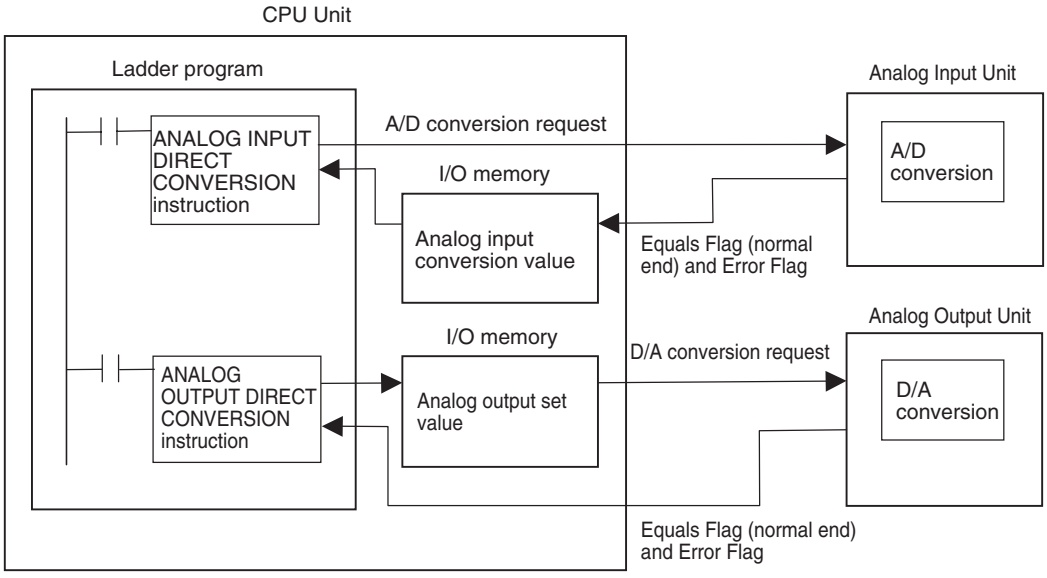

Direct conversion enables creating a consistent input-processing-output time for superior periodic control. This is not possible with the following methods.

- Refreshing I/O during the CPU Unit's cycle
- Using the I/O REFRESH (IORF) instruction
- Using the SPECIAL I/O UNIT I/O REFRESH (FIORF) instruction

Setting Up Direct Conversion

This section provides the basic procedures for setting scheduled interrupt tasks, setting the High-speed Analog Units, and writing the ladder programming to set up direct conversion (analog-to-digital or digital-to-analog).

1. Setting a Scheduled Interrupt Task

For details, refer to the *CX-Programmer Operation Manual* (Cat. No. W446).

1,2,3...

1. Right-click ***Programs*** in the project workspace and, from the pop-up menu, select ***Insert Program*** and then either ***Ladder***, ***Structured Text***, or ***SFC***.

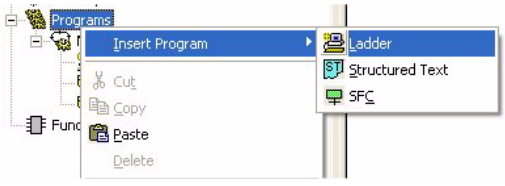

2. Use the following procedure to assign the program to a scheduled interrupt task.
   Right-click ***Programs*** in the project workspace and select ***Properties*** from the pop-up menu.

3. Assign the program to interrupt task 02 (scheduled interrupt 0).

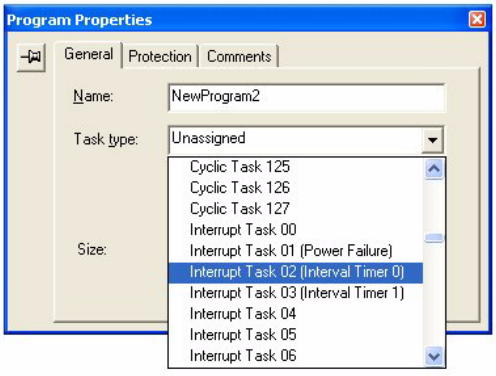

4. Set the time unit that will be used to set the scheduled interrupt interval. Set the interval to 10 ms, 1.0 ms, or 0.1 ms in the PLC Setup.

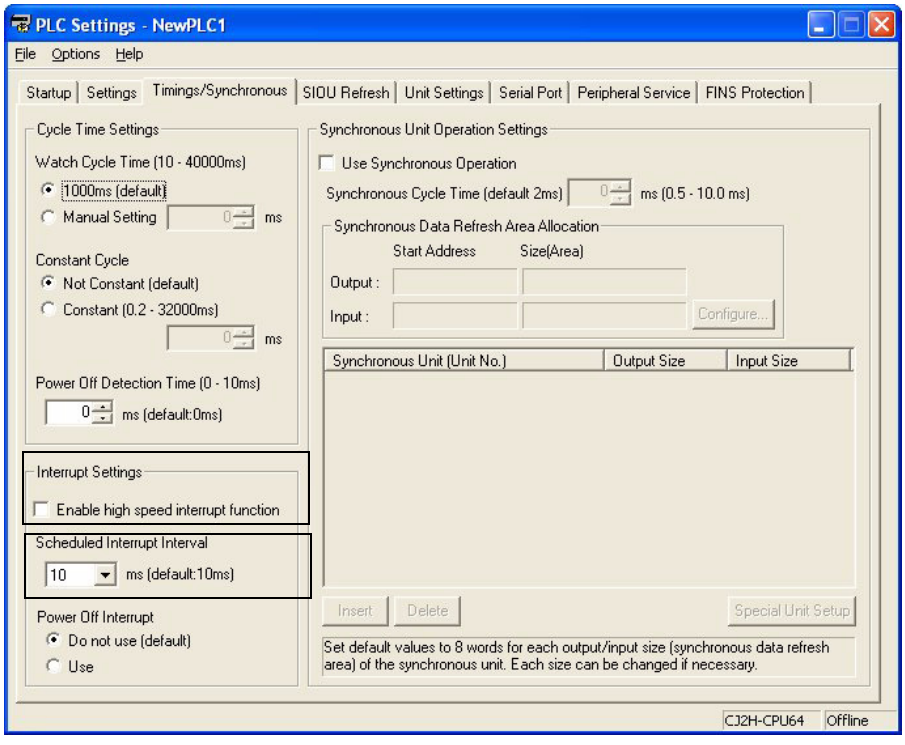

Note With a CJ2H CPU Unit, the overhead time required to start the interrupt task can be shortened.
Refer to the *SYSMAC CJ-series CJ2/CJ3 CPU Unit Software User's Manual* (Cat. No. W473) for details.

2. Setting CJ1W-AD042 or CJ1W-DA042V Parameters

For details, refer to the *CX-Programmer Operation Manual* (Cat. No. W446).

1,2,3...

1. Open the I/O Table Window.
2. Double-click the CJ1W-AD042 or CJ1W-DA042V. The Edit Parameters Dialog Box for the selected Unit will be displayed.

3. Select *Direct Conversion Mode*.

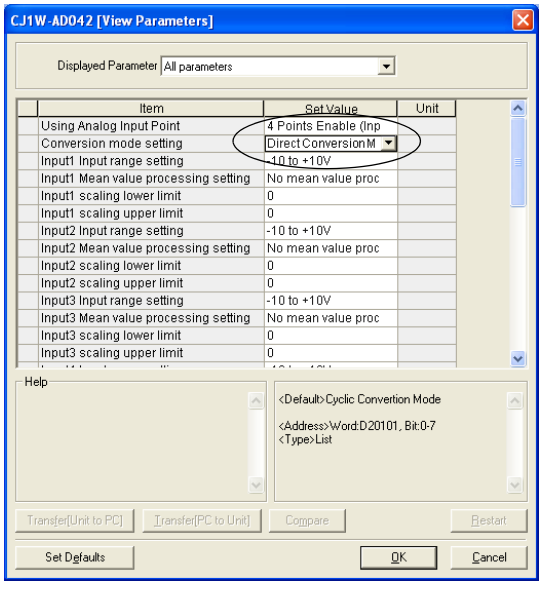

3. Programming Example

1,2,3...

1. CJ1W-AD042: Unit number 3, CJ1W-DA042V: Unit number 7
2. The AIDC instruction is used to send a request to the CJ1W-AD042 Unit with unit number 3 to perform analog-to-digital conversion for analog input 1. The converted input value is written to CIO 2031. The value in CIO 2031 is used in data processing and the result is written to CIO 2071.
   The AODC instruction is then used to send a request to the CJ1W-DA042V Unit with unit number 7 to perform digital-to-analog conversion. (AIDC operands: The unit number and analog input number, AODC operands: The unit number and analog output number)

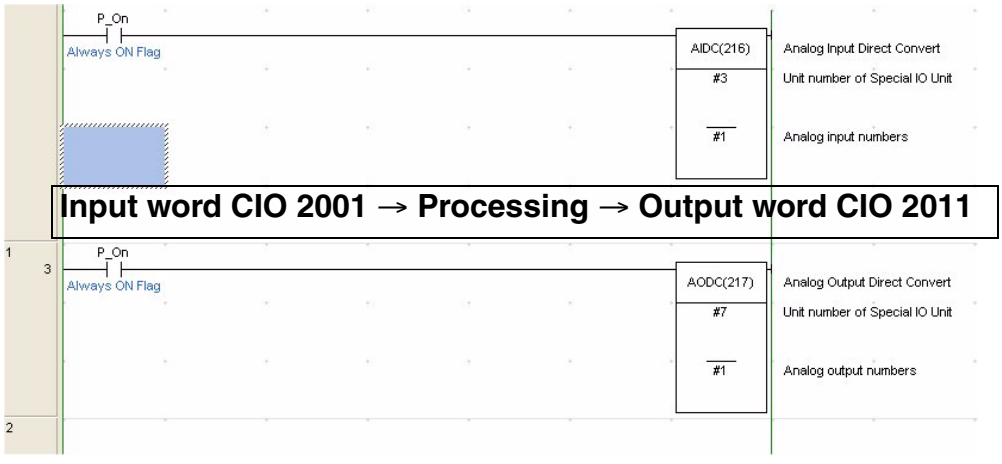

3. Enable the task. The SET INTERRUPT MASK instruction (MSKS) is used in the main task to set the scheduled interrupt interval and start execution of the scheduled interrupts. (MSKS operands: “4” (specifies interrupt task 2 (scheduled interrupt 0)) and the interrupt interval)

1-2 Basic Configuration

CS-series PLCs

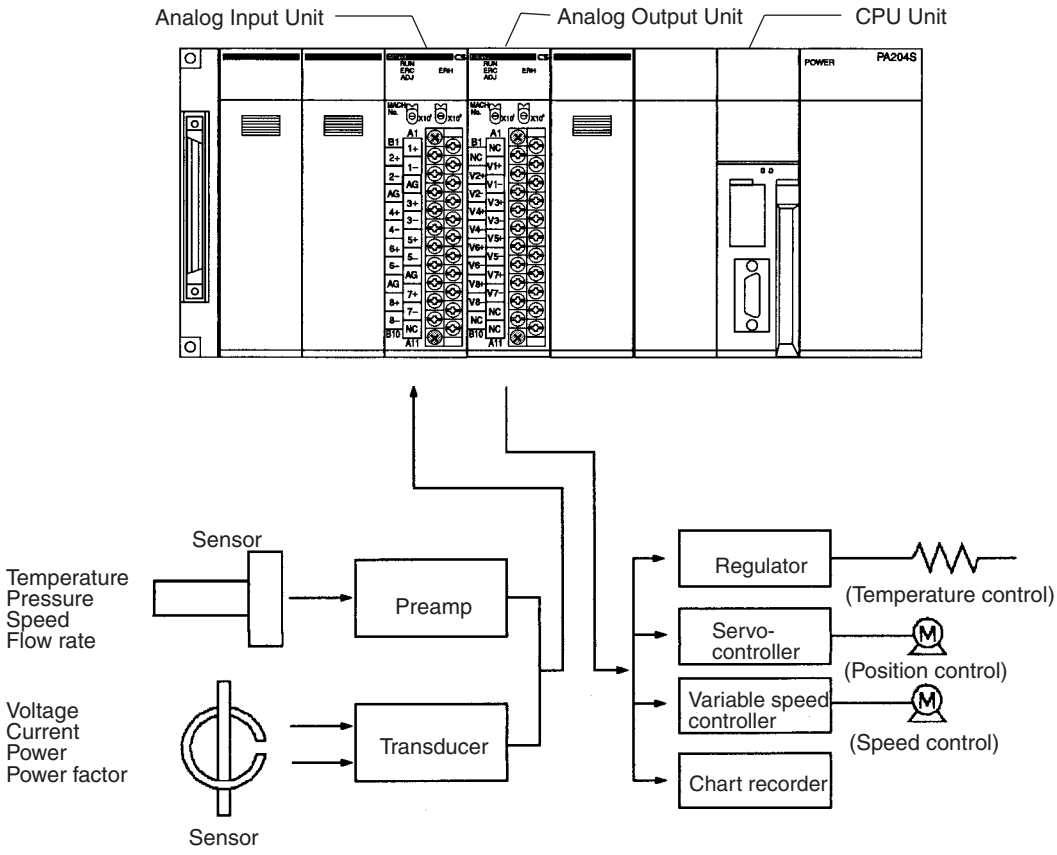

Note The above diagram is an installation example for the CS1W-AD081-V1 Analog Input Unit and CS1W-DA08V Analog Output Unit.

CJ-series PLCs

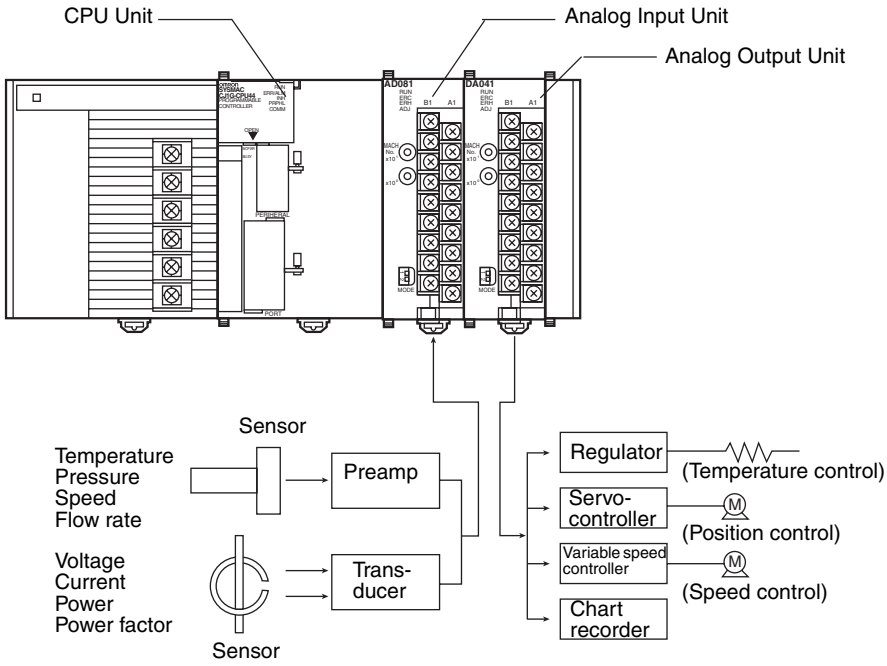

Note The above diagram is an installation example for the CJ1W-AD041-V1/081-V1 Analog Input Unit and CJ1W-DA021/041 Analog Output Unit.

Mounting Restrictions

CS-series PLCs

The CS1W-MAD44 Analog I/O Unit is a Special I/O Unit of the CS Series.

CS1W-MAD44 Analog I/O Units can be mounted to either CS-series CPU Racks or CS-series Expansion Racks. These Analog I/O Units cannot be mounted to C200H Expansion I/O Racks or SYSMAC BUS Slave Racks.

The number of Analog I/O Units that can be mounted to one Rack (i.e., a CPU Rack or Expansion Rack) depends on the maximum supply current of the Power Supply Unit and the current consumption of other Units. If a Rack is to be mounted with Analog Input, Output, or I/O Units only, the following restrictions will apply.

Power Supply Unit	Rack	CS1W-AD041-V1 CS1W-AD081-V1 (5 VDC 120 mA)	CS1W-DA041 CS1W-DA08V (5 VDC 130 mA)	CS1W-MAD44 (5 VDC 200 mA)	CS1W-DA08C (5 VDC 130 mA)	CS1W-AD161 (5 VDC 150 mA)
C200HW-PA204 C200HW-PA204S C200HW-PA204R C200HW-PA204C C200HW-PD024 (4.6 A at 5 VDC)	CPU Rack	6	3	3	2	8
	Expansion Rack	6	3	3	2	9
C200HW-PA209R (9 A at 5 VDC)	CPU Rack	10	7	6	5	10
	Expansion Rack	10	7	6	5	10
CS1D-PA207R (7 A at 5 VDC)	CPU Rack	8	5	4	4	8
	Expansion Rack	9	6	5	4	9
CS1D-PD024 (4.3 A at 5 VDC)	CPU Rack	6	3	2	2	7
	Expansion Rack	6	3	2	2	8

Note The I/O bits of the Special I/O Unit are allocated according to the setting of the unit number switches on the front panel of the Unit, and not the slot number where the Unit is mounted.

CJ-series PLCs

CJ-series Analog I/O Units are Special I/O Unit of the CJ-series PLCs.

These Units can be connected in the CJ-series CPU Rack or Expansion Racks. The number of Analog I/O Units that can be connected in each Rack will depend on the current consumption of the other Units in the Rack. The number of Analog I/O Units that can be mounted to one Rack (i.e., a CPU Rack or Expansion Rack) depends on the current consumption of other Units.

The maximum number of Analog Input Units, Analog Output Units, or Analog I/O Units that can be mounted to a CJ2H-CPU6□ CPU Unit (no EtherNet/IP) is given in the following table for when only these Units are mounted.

Power Supply Unit	Rack	CJ1W-DA021 CJ1W-DA041 (5 VDC 120 mA) CJ1W-DA08V CJ1W-DA08C (5 VDC 140 mA)	CS1W-AD041-V1 CJ1W-AD081-V1 (5 VDC 420 mA) CJ1W-DA042V (5 VDC 400 mA)	CJ1W-AD042 (5 VDC 520 mA)	CJ1W-MAD42 (5 VDC 580 mA)
CJ1W-PA205R CJ1W-PA205C CJ1W-PD025 (5.0 A at 5 VDC)	CPU Rack	10	10	8	7
	Expansion Rack	10	10	9	8
CJ1W-PA202 (2.8 A at 5 VDC)	CPU Rack	10	5	4	4
	Expansion Rack	10	6	5	4
CJ1W-PD022 (2.0 A at 5 VDC)	CPU Rack	10	3	3	2
	Expansion Rack	10	4	3	3

Note The I/O bits of the Special I/O Unit are allocated according to the setting of the unit number switches on the front panel of the Unit, and not the order in which it is connected.

1-2-1 Mounting Procedure

CS-series PLCs

Use the following procedure to mount Analog I/O Units to the Backplane.

1,2,3...

1. Lock the top of the Analog I/O Unit into the slot on the Backplane and rotate the Unit downwards as shown in the following diagram.

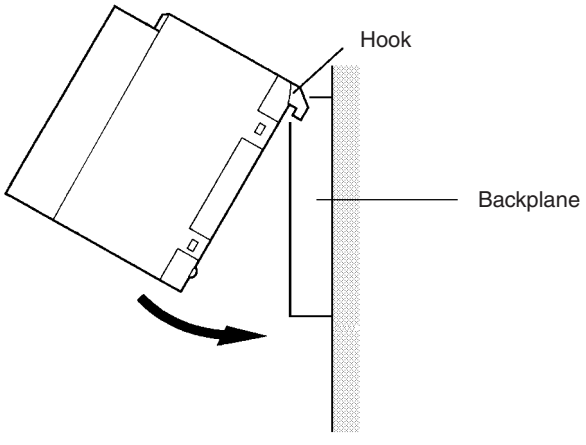

2. While making sure to align the Unit properly with the connectors, tighten the mounting screws securely to the tightening torque of 0.4 N·m.

3. To remove the Unit, first loosen the mounting screws using a Phillips screwdriver.

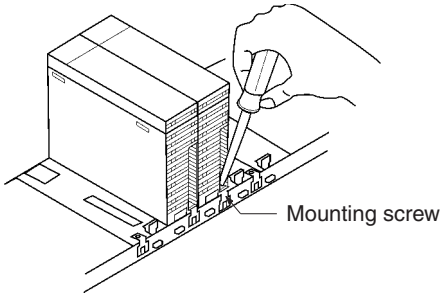

Leave enough space below each Rack, as shown in the following diagram for mounting and removing the Units.

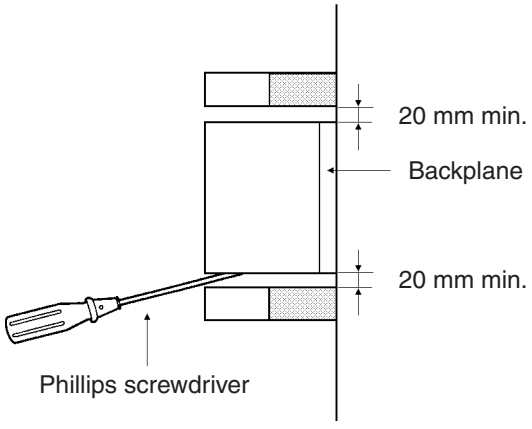

CJ-series PLCs

Analog I/O Units are connected as I/O Units in the system configuration, as shown below.

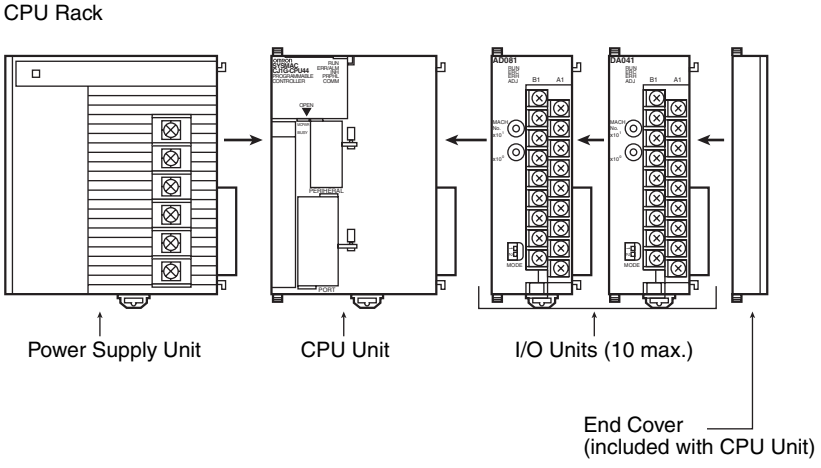

Use the following procedure to connect Analog I/O Units to a CJ-series Rack.

1,2,3... 1. Align the connectors and press in firmly on the Units to connect them completely.

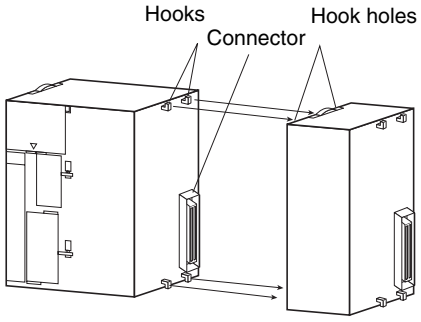

2. Move the sliders on the top and bottom of the Unit to the lock position to secure the Units. The sliders should click into place.

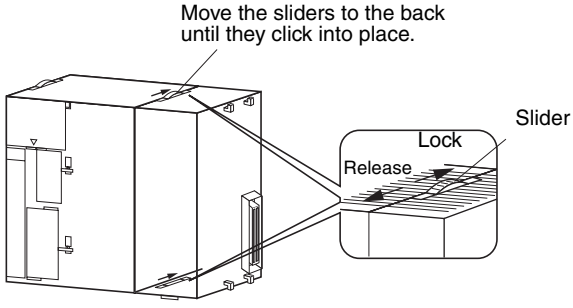

3. Attach an End Cover to the Unit on the right end of the Rack.

Note The CJ-series PLC may not operate properly if the sliders are not locked firmly into place.

1-2-2 Precautions

Be sure to turn OFF the power supply to the PLC before installing or disconnecting Units or connecting lines.

To reduce the risk of malfunctioning due to electrical noise, wire input and output lines in separate ducts from high-voltage and power lines.

When wiring a Unit, place a label over the top of the Unit to prevent wire clippings or other materials from getting inside the Unit. When the wiring has been completed, the label must be removed to prevent heat radiation.

CS-series PLCs

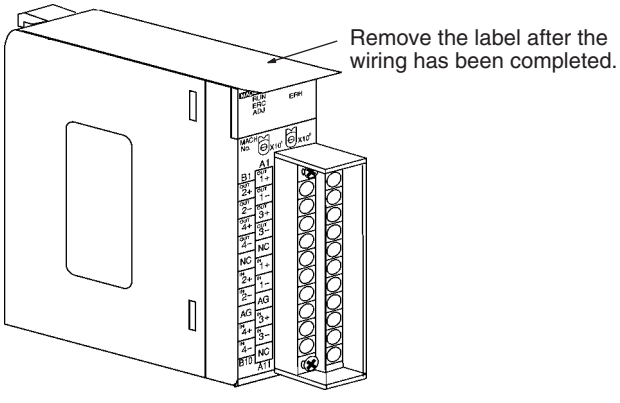

CJ-series PLCs

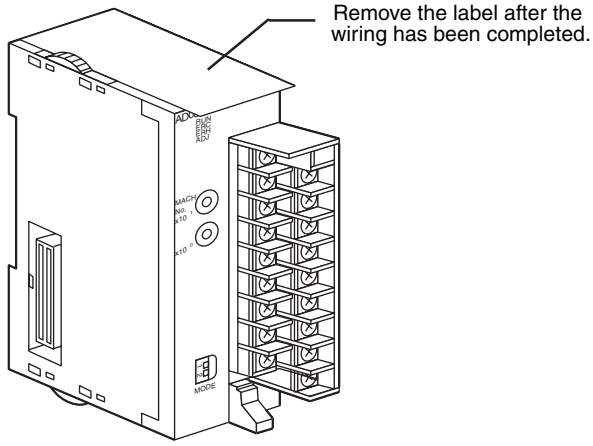

1-3 Function Applications

Function	Application	Page
Mean value processing	Performs a smooth conversion when the input fluctuation is too extreme. Example: Removes noise interference from data such as flow/pressure.	59, 111, 160, 334, 402
Peak value hold	Holds the maximum value that has been read. Holds the data that is less than the maximum value.	62, 114, 164, 337, 405
Disconnection detection	Detects disconnection of input signals.	63, 115, 165, 338, 408
Output hold	Holds the output signal at the previous value for certain conditions, such as errors.	200, 248, 292, 341, 412
	Holds the output signal in the lower-limit value or 0 V for certain conditions, such as errors.	
	Holds the output signal in the upper-limit value for certain conditions, such as errors.	
Ratio conversion	Uses the Analog I/O Unit as a gradient setting device for setting ratio and bias.	342, 415
Offset gain adjustment	Adjusts the offset and gain, and uses the I/O functions.	64, 116, 203, 252, 347, 418
Direct conversion	Creating a consistent input-processing-output time	158, 291

SECTION 2
CS-series Analog Input Units (CS1W-AD041-V1/081-V1/161)

This section explains how to use the CS1W-AD041-V1/081-V1/161 Analog Input Units.

2-1 Specifications 18
2-1-1 Specifications 18
2-1-2 Input Function Block Diagram 21
2-1-3 Input Specifications 21
2-2 Operating Procedure 24
2-2-1 Procedure Examples 25
2-3 Components and Switch Settings 31
2-3-1 Indicators 32
2-3-2 Unit Number Switches 33
2-3-3 Operation Mode Switch 34
2-3-4 Voltage/Current Switch (CS1W-AD041-V1/AD081-V1) 35
2-4 Wiring 36
2-4-1 Terminal Arrangement 36
2-4-2 Internal Circuitry 37
2-4-3 Voltage Input Disconnection. 38
2-4-4 Input Wiring Example 39
2-4-5 Input Wiring Considerations. 42
2-5 Exchanging Data with the CPU Unit 42
2-5-1 Outline of Data Exchange. 42
2-5-2 Unit Number Settings 43
2-5-3 Special I/O Unit Restart Bits 44
2-5-4 Fixed Data Allocations 45
2-5-5 I/O Refresh Data Allocations 50
2-6 Analog Input Functions and Operating Procedures 56
2-6-1 Input Settings and Conversion Values 56
2-6-2 Conversion Time/Resolution Setting 58
2-6-3 Mean Value Processing. 59
2-6-4 Peak Value Hold Function 62
2-6-5 Input Disconnection Detection Function 63
2-6-6 Scaling Function (CS1W-AD161 Only). 64
2-7 Adjusting Offset and Gain 64
2-7-1 Adjustment Mode Operational Flow 64
2-7-2 Input Offset and Gain Adjustment Procedures. 66
2-8 Handling Errors and Alarms 73
2-8-1 Indicators and Error Flowchart. 73
2-8-2 Alarms Occurring at the Analog Input Unit 74
2-8-3 Errors in the CPU Unit 77
2-8-4 Restarting Special I/O Units. 78
2-8-5 Troubleshooting 78

2-1 Specifications

2-1-1 Specifications

Item			CS1W-AD041-V1	CS1W-AD081-V1	CS1W-AD161
Unit type			CS-series Special I/O Unit		
Isolation (See note 1.)			Between inputs and PLC signals: Photocoupler (No isolation between input signals.)		
External terminals			21-point detachable terminal block (M3 screws)		Two 34-pin MIL connectors
Affect on CPU Unit cycle time			0.2 ms		
Current consumption			120 mA max. at 5 VDC, 90 mA max. at 26 VDC		150 mA max. at 5 VDC, 55 mA max. at 26 VDC
Dimensions (mm) (See note 2.)			35 × 130 × 126 (W × H × D)		35 × 130 × 119 (W × H × D)
Weight			450 g max.		
General specifications			Conforms to general specifications for SYSMAC CS Series.		
Mounting position			CS-series CPU Rack or CS-series Expansion Rack (Cannot be mounted to a C200H Expansion I/O Rack or a SYSMAC BUS Slave Rack.)		
Maximum number of Units (See note 3.)			Refer to the table on page 19.		
Data exchange with CPU Units (See note 4.)			Special I/O Unit Area in CIO Area (CIO 2000 to CIO 2959): 10 words per Unit Special I/O Unit Area in DM Area (D20000 to D29599): 100 words per Unit		Special I/O Unit Area in CIO Area (CIO 2000 to CIO 2959): 20 words per Unit Special I/O Unit Area in DM Area (D20000 to D29599): 200 words per Unit
Input specifications	Number of analog inputs		4	8	16
	Input signal range (See note 5.)		1 to 5 V 0 to 5 V 0 to 10 V –10 to 10 V 4 to 20 mA (See note 6.)		
	Maximum rated input (for 1 point) (See note 7.)		Voltage Input: ±15 V Current Input: ±30 mA		
	Input impedance		Voltage Input: 1 MΩ min. Current Input: 250 Ω (rated value)		
	Resolution		4,000/8,000 (See note 8.)		
	Converted output data		16-bit binary data		
	Accuracy (See note 9.)	23±2°C	Voltage Input: ±0.2% of full scale Current Input: ±0.4% of full scale		Voltage Input: ±0.2% of full scale Current Input: ±0.2% of full scale
		0°C to 55°C	Voltage Input:±0.4% of full scale Current Input: ±0.6% of full scale		Voltage Input:±0.4% of full scale Current Input: ±0.4% of full scale
	A/D conversion period (See note 10.)		1.0 ms or 250 μs per point max. (See note 8.)		

Item		CS1W-AD041-V1	CS1W-AD081-V1	CS1W-AD161
Input functions	Mean value processing	Stores the last "n" data conversions in the buffer, and stores the mean value of the conversion values. Number of mean value buffers: n = 2, 4, 8, 16, 32, 64		
	Peak value hold	Stores the maximum conversion value while the Peak Value Hold Bit is ON.		
	Input disconnection detection	Detects the disconnection and turns ON the Disconnection Detection Flag. (See note 11.)		
	Scaling function	None	None	Enabled only for conversion time of 1 ms and resolution of 4,000. Setting any values within a range of ±32,000 as the upper and lower limits allows the A/D conversion result to be output with these values as full scale.

Note

1. Do not apply a voltage higher than 600 V to the terminal block when performing withstand voltage test on this Unit. Otherwise, internal elements may deteriorate.
2. Refer to *Dimensions* on page 441 for details on the Unit's dimensions.
3. The maximum number of Analog Input Units that can be mounted to one Rack depends on the Power Supply Unit mounted to the Rack.

Power Supply Unit	Rack	CS1W-AD041-V1 CS1W-AD081-V1 (5 VDC 120 mA)	CS1W-DA041 CS1W-DA08V (5 VDC 130 mA)	CS1W-MAD44 (5 VDC 200 mA)	CS1W-DA08C (5 VDC 130 mA)	CS1W-AD161 (5 VDC 150 mA)
C200HW-PA204 C200HW-PA204S C200HW-PA204R C200HW-PA204C C200HW-PD024 (4.6 A at 5 VDC)	CPU Rack	6	3	3	2	8
	Expansion Rack	6	3	3	2	9
C200HW-PA209R (9 A at 5 VDC)	CPU Rack	10	7	6	5	10
	Expansion Rack	10	7	6	5	10
CS1D-PA207R (7 A at 5 VDC)	CPU Rack	8	5	4	4	8
	Expansion Rack	9	6	5	4	9
CS1D-PD024 (4.3 A at 5 VDC)	CPU Rack	6	3	2	2	7
	Expansion Rack	6	3	2	2	8

The above limits may be reduced depending on the power consumed by other Units on the same Rack.

4. Data Exchange with the CPU Unit

Area	Number of words	Data transfer timing	Transfer direction	Data contents
Special I/O Unit Area in CIO Area (CIO 2000 to CIO 2959, CIO 2000.00 to CIO 2959.15)	• CS1W-AD041-V1/081-V1: 10 words per Unit • CS1W-AD161: 20 words per Unit	Constantly	CPU Unit to Analog Input Unit	Peak value hold
			Analog Input Unit to CPU Unit	Analog input values Line disconnection detection Alarm flags Etc.
Special I/O Unit Area in DM Area (D20000 to D26959)	• CS1W-AD041-V1/081-V1: 100 words per Unit • CS1W-AD161: 200 words per Unit	When power is turned ON or Unit is restarted	CPU Unit to Analog Input Unit	Input signal conversion ON/OFF Signal range specifications Averaging specifications Resolution/conversion time setting Operation mode setting Scaling setting (CS1W-AD161 only)

Note The resolution/conversion time setting and operation mode setting are supported only by version-1 Analog Input Units.

5. Input signal ranges can be set for each input.
6. Voltage input or current input is selected for the CS1W-AD041-V1 and CS1W-AD081-V1 by using the voltage/current switch at the back of the terminal block. Voltage input or current input is selected for the CS1W-AD161 by wiring the connector terminals. Voltage/current selection for input ranges 1 to 5 V or 4 to 20 mA can be set in DM word m+52.
7. Use the analog input voltage/current value within the specified input signal range. Exceeding the specified range may result in malfunction.
8. With Analog Input Units, the resolution can be changed from 4,000 to 8,000 and the conversion time changed from 1 ms to 250 μs in DM word m+18 for CS1W-AD041-V1 and CS1W-AD081-V1 or in DM word m+19 for CS1W-AD161.
9. The following are adjusted at the factory.

   CS1W-AD041-V1/081-V1: Voltage inputs

   CS1W-AD161: Voltage inputs and current inputs
   Calibration conditions: Recommended Terminal Block-Connector Conversion Unit used. (The factory calibration for a current input can be made effective by setting DM word m+52.)

   To use current inputs with the CS1W-AD041-V1/081-V1 or to use the CS1W-AD161 with products other than the recommended ones, adjust the offset and gain as required.
10. A/D conversion time is the time it takes for an analog signal to be stored in memory as converted data after it has been input. It takes at least one cycle before the converted data is read by the CPU Unit.
11. Input disconnection detection is valid only when the 1 to 5-V or 4 to 20-mA range is set. If there is no input signal for when the 1 to 5-V or 4 to 20-mA range is set, the Disconnection Detection Flag will turn ON.

2-1-2 Input Function Block Diagram

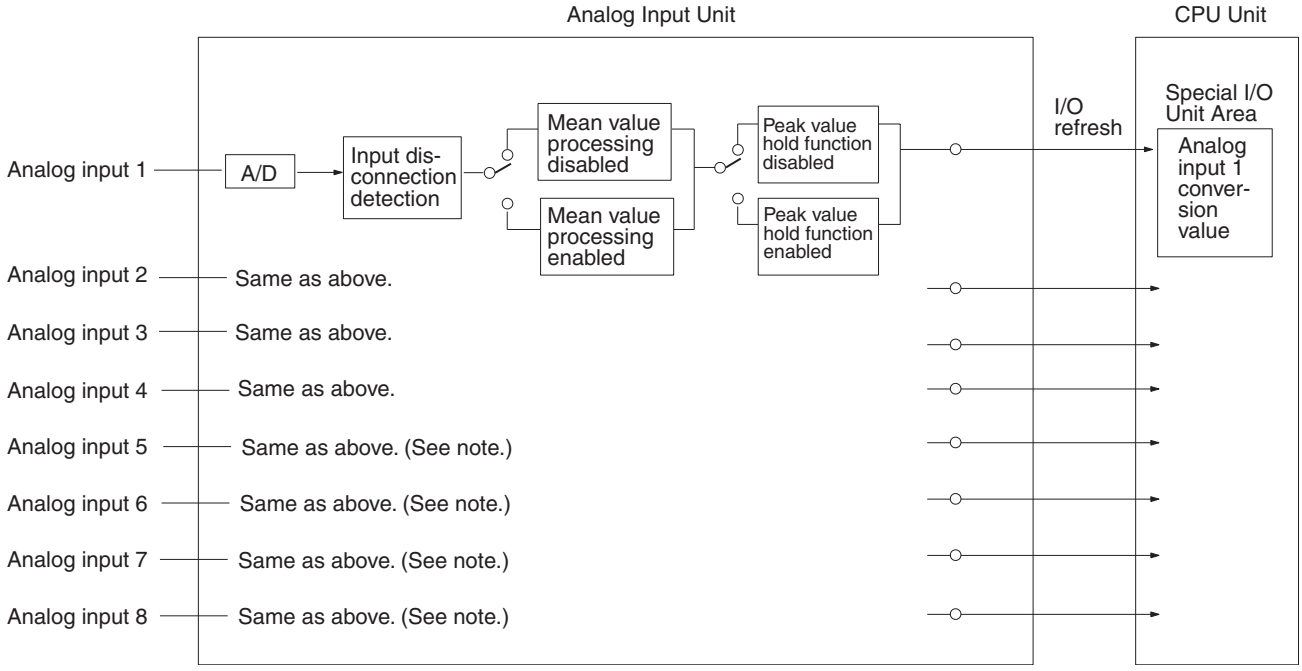

Note There are only four analog inputs for the CS1W-AD041-V1, and 16 analog inputs for the CS1W-AD161.

2-1-3 Input Specifications

If signals that are outside the specified range provided below are input, the conversion values (16-bit binary data) used will be either the maximum or minimum value.

Range: 1 to 5 V (4 to 20 mA)

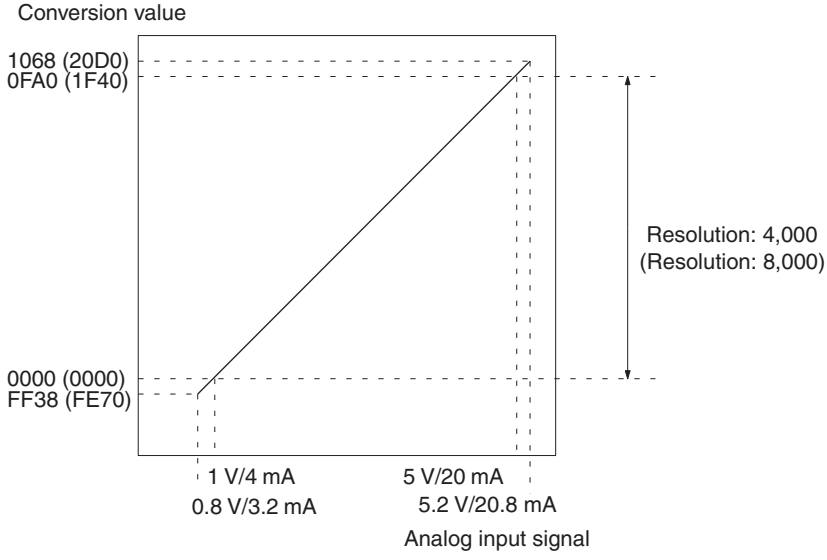

Range: 0 to 10 V

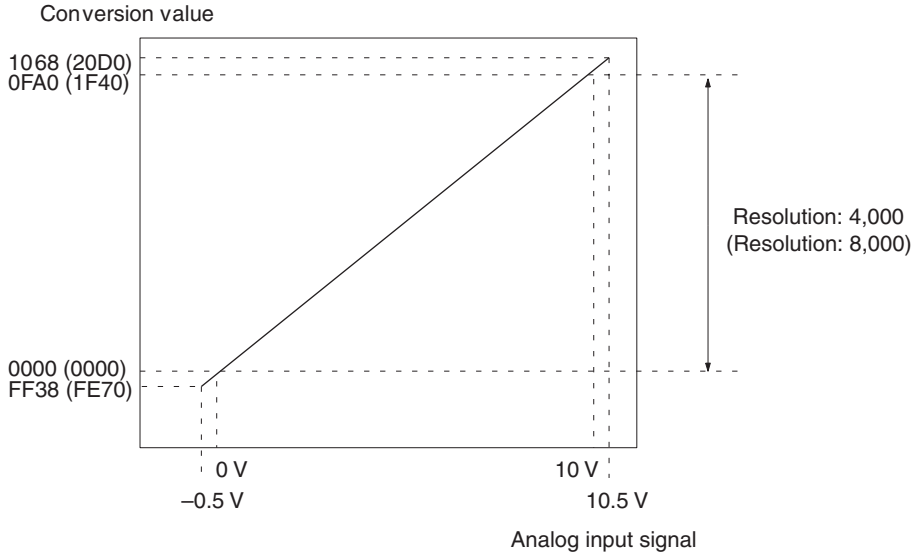

Range: 0 to 5 V

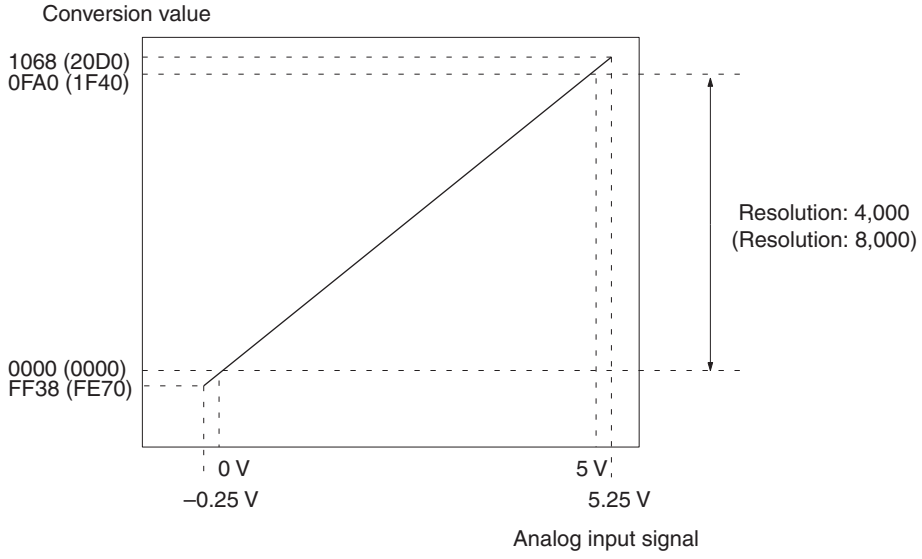

Range: –10 to 10 V

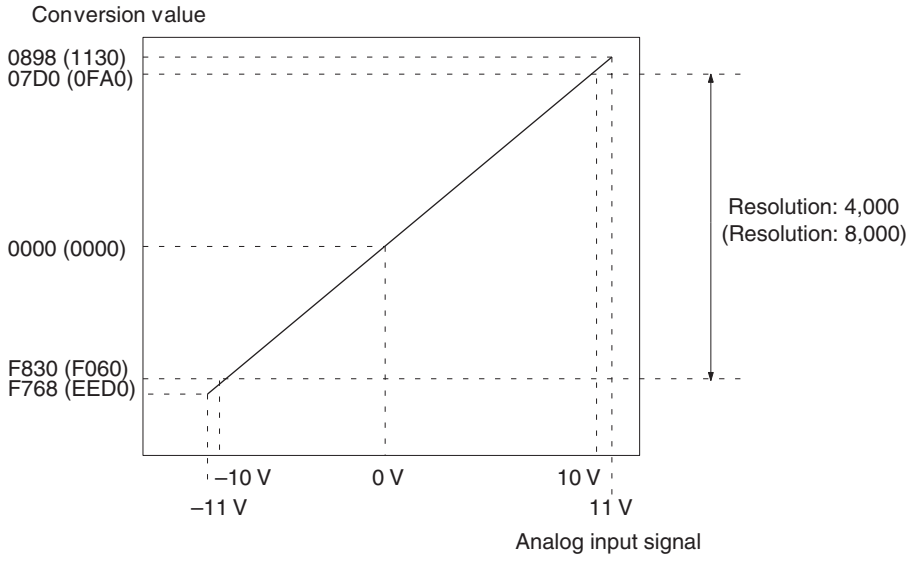

Note The conversion values for a range of –10 to 10 V will be as follows (for a resolution of 4,000):

16-bit binary data	BCD
F768	–2200
:	:
FFFF	–1
0000	0
0001	1
:	:
0898	2200

2-2 Operating Procedure

Follow the procedure outlined below when using Analog Input Units.

Installation and Settings

1,2,3...

1. Set the operation mode to normal mode. (See note 1.)
2. Select voltage/current input using the switch at the back of the terminal block. (See note 2.)
3. Wire the Unit.
4. Use the unit number switches on the front panel of the Unit to set the unit number. (See note 3.)
5. Turn ON the power to the PLC.
6. Create the Input tables.
7. Make the Special Input Unit DM Area settings.
   - Set the input numbers to be used.
   - Set the input signal ranges.
   - Set the number of mean processing samplings.
   - Conversion time and resolution
8. Turn the power to the PLC OFF and ON, or turn ON the Special I/O Unit Restart Bit to ON.

When the input for the connected devices needs to be calibrated, follow the procedures in *Offset Gain Adjustment* below. Otherwise, skip to *Operation* below.

Offset and Gain Adjustment

1,2,3...

1. Set the operation mode to adjustment mode. (See note 1.)
2. Select voltage or current input. (See note 2.)
3. Turn ON the power to the PLC.
4. Adjust the offset and gain.
5. Turn OFF the power to the PLC.
6. Set the operation mode to normal mode. (See note 1.)

Operation

1,2,3...

1. Turn ON the power to the PLC.
2. Ladder program
   - Read conversion values or write set values by means of MOV(021) and XFER(070).
   - Specify the peak hold function.
   - Obtain disconnection notifications and error codes.

Note

1. Setting the Operation Mode
   The operation mode can be changed either by setting the DIP switch on the rear panel of the Unit or changing the DM Area settings. When normal mode is set both in the DIP switch and in the DM Area settings, the Unit operates in normal mode. If adjustment mode is set in either or both of the settings, the Unit operates in adjustment mode. The operation mode selection setting is allocated in DM word m+18 for CS1W-AD041-V1 and CS1W-AD081-V1 and in DM word m+19 for CS1W-AD161.
2. Selecting Voltage/Current Input
   With the CS1W-AD041-V1 and CS1W-AD081-V1, remove the terminal block and set the DIP switch located at the back. With the CS1W-AD161,

select either voltage input or current input by wiring the connector terminals. Use DM word m+52 to select 1 to 5 V or 4 to 20 mA as the voltage or current input range, respectively.

3. Setting the Unit Number
   Set the unit number for the Special I/O Unit using the rotary switches on the front panel of the Unit.
   Set the CS1W-AD041-V1 and CS1W-AD081-V1 between 0 and 95. A single CS1W-AD161 is allocated words in the CIO Area and DM Area for two Units. Set the unit number between 0 and 94. To set a CS1W-AD161 to unit number "n," the unit number setting "n+1" is not possible.

2-2-1 Procedure Examples

The procedure for using Analog Input Units is provided here using the CS1W-AD081-V1 as an example. The method used to set CS1W-AD161 Analog Input Units is different. Be sure to use the correct procedure.

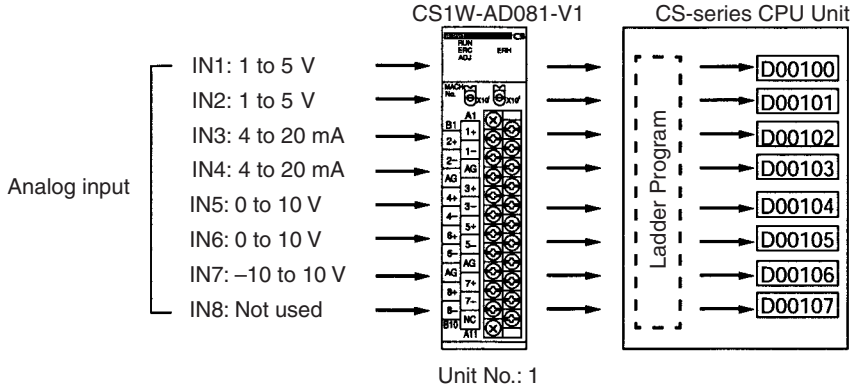

Setting the Analog Input Unit

1,2,3... 1. Set the operation mode. Refer to *2-3-3 Operation Mode Switch* for further details.

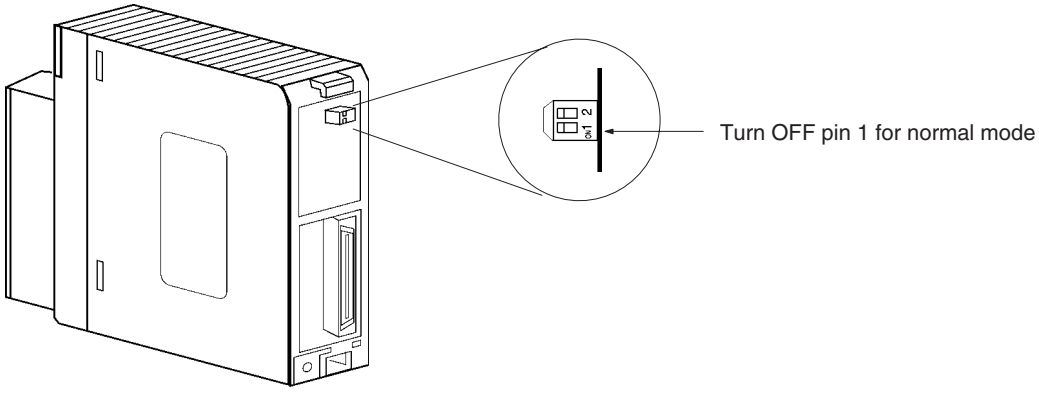

The operation mode can be changed by setting DM word m+18 (DM word m+19 for CS1W-AD161).

2. Set the voltage/current switch. Refer to *2-3-4 Voltage/Current Switch (CS1W-AD041-V1/AD081-V1)* for further details.

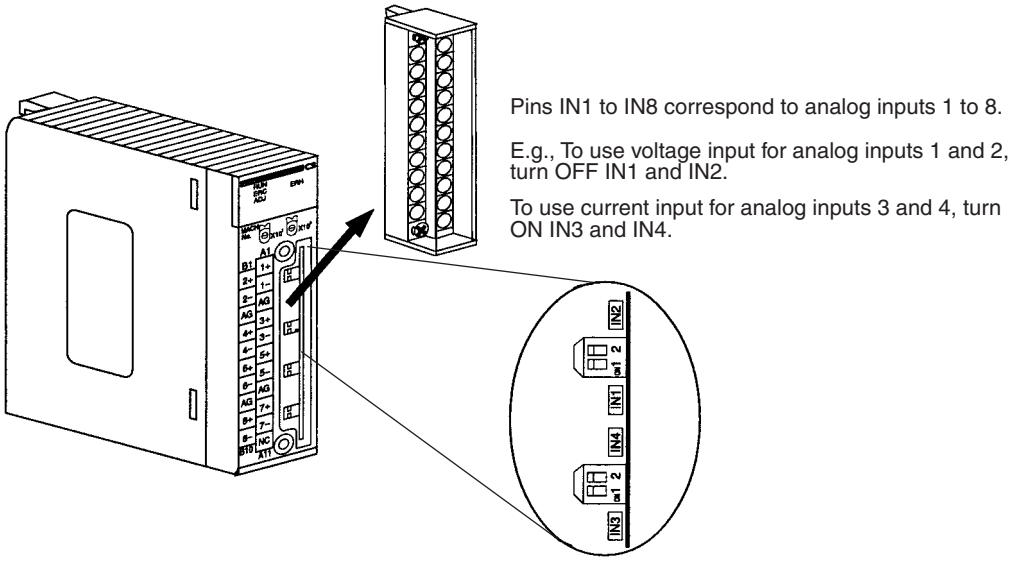

Note With CS1W-AD161, select voltage/current input by wiring the connector terminals.

3. Mount and wire the Analog Input Unit. Refer to *1-2-1 Mounting Procedure*, *2-4 Wiring* or *2-4-4 Input Wiring Example* for further details.

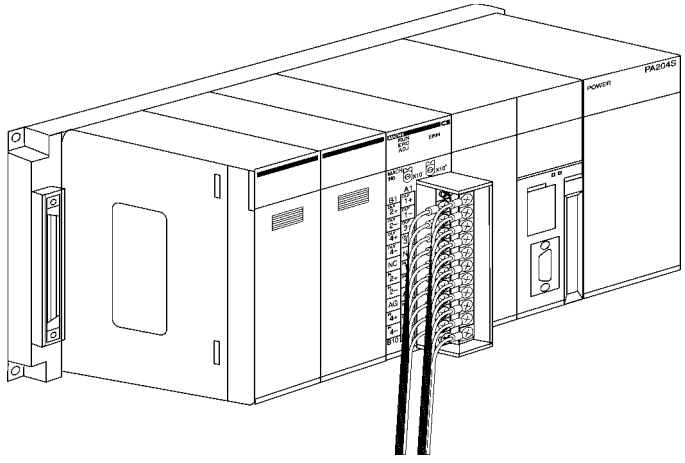

4. Set the unit number switches. Refer to *2-3-2 Unit Number Switches* for further details.

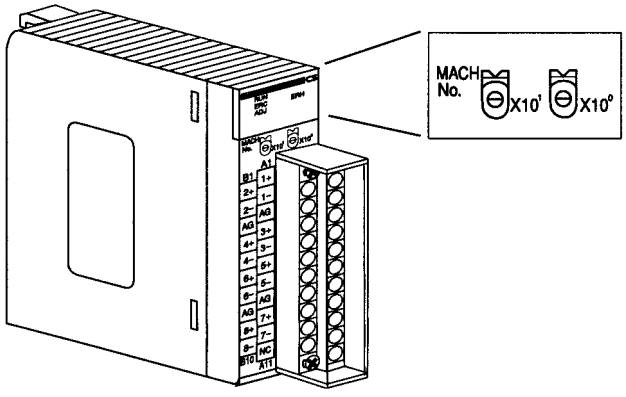

If the unit number is set to 1, words will be allocated to the Special I/O Unit Area CIO 2010 to CIO 2019 and to the Special I/O Unit Area D20100 to D20199.

Note A single CS1W-AD161 is allocated CIO Area words and DM Area words for two Units. For example, if the unit number is set to 1, the CS1W-AD161 will be allocated CIO Area words CIO 2010 to CIO 2029 and DM Area words D20100 to D20299.

5. Turn ON the power to the PLC.

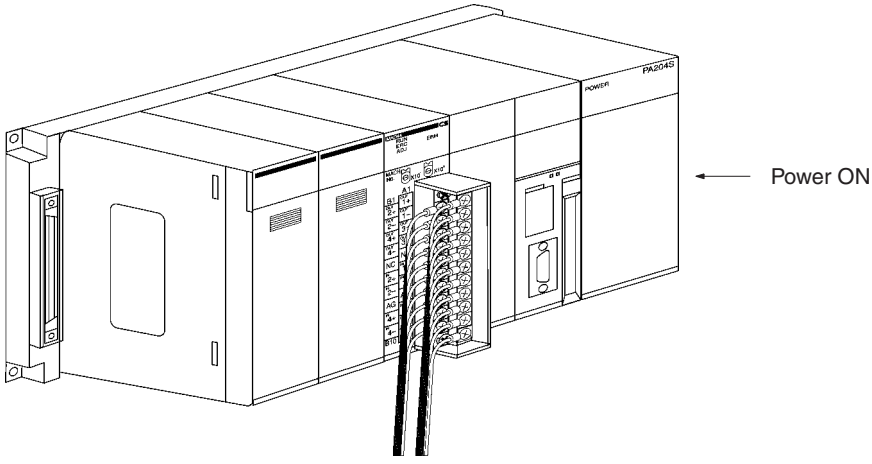

Creating I/O Tables

After turning ON the power to the PLC, be sure to create the I/O tables.

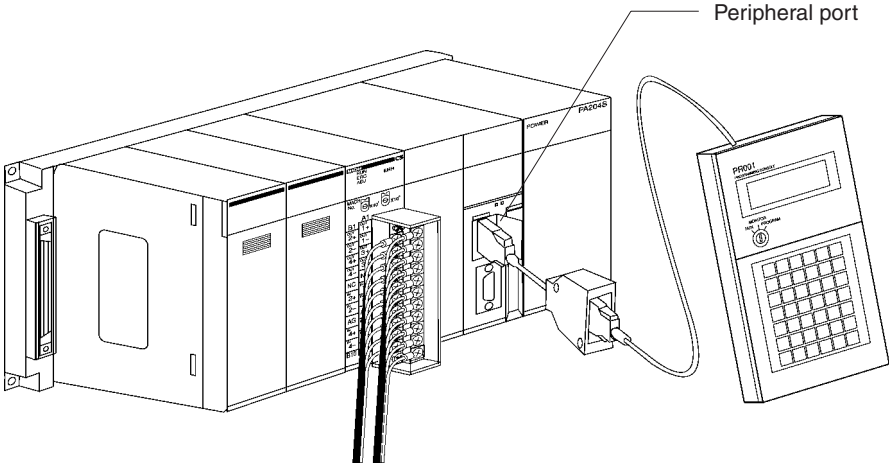

Initial Data Settings

1,2,3... 1. Specify the Special I/O Unit DM Area settings. Refer to *2-5-4 Fixed Data Allocations* for further details.

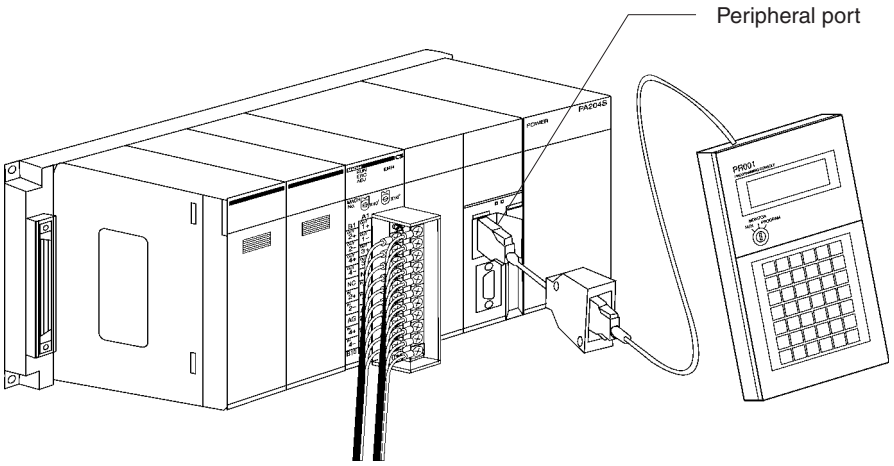

Setting conditions

Unit No. 1

Analog input 1: 1 to 5 V
Analog input 2: 1 to 5 V
Analog input 3: 4 to 20 mA
Analog input 4: 4 to 20 mA
Analog input 5: 0 to 10 V
Analog input 6: 0 to 10 V
Analog input 7: –10 to 10 V
Analog input 8: Not used.

- The following diagram shows the input settings used. Refer to *Allocations in DM Area* on page 45 and *2-6-1 Input Settings and Conversion Values* for more details.

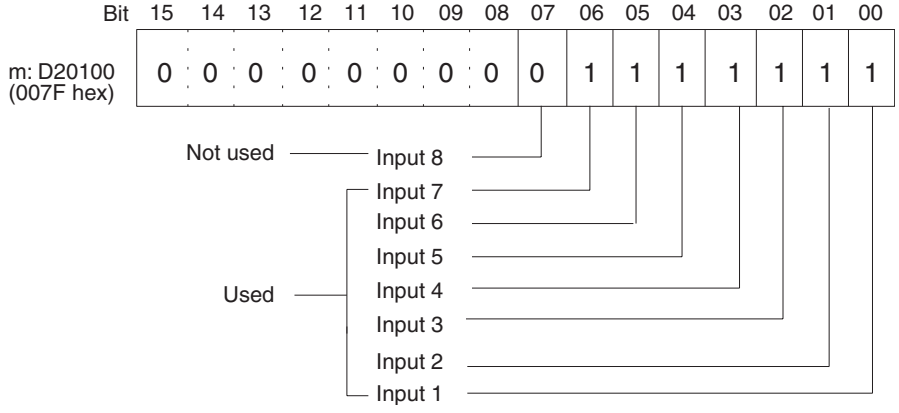

- The following diagram shows the input range settings. Refer to *DM Allocation Contents* on page 45 and *2-6-1 Input Settings and Conversion Values* for more details.

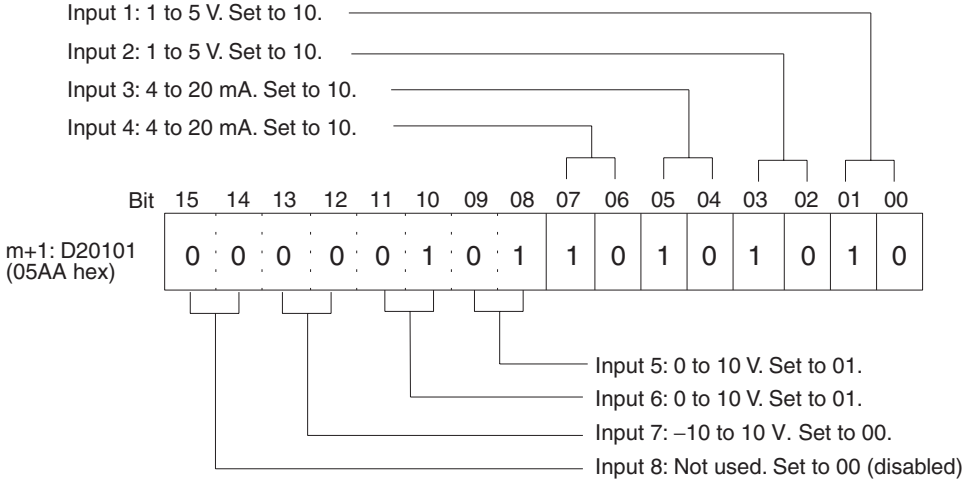

Also set DM word m+52 when using current input with the CS1W-AD161.

- The following diagram shows the conversion time/resolution setting. (Refer to *2-6-2 Conversion Time/Resolution Setting*.)

	Bit	15	14	13	12	11	10	09	08	07	06	05	04	03	02	01	00
m+18: D20118 (See note.) (0000 hex)		0	0	0	0	0	0	0	0								

Conversion Time/Resolution Setting
0000: 1-ms conversion time, 4,000 resolution
C100: 250-μs conversion time, 8,000 resolution

Note For CS1W-AD161, set D(m+19):D20119.

2. Restart the CPU Unit.

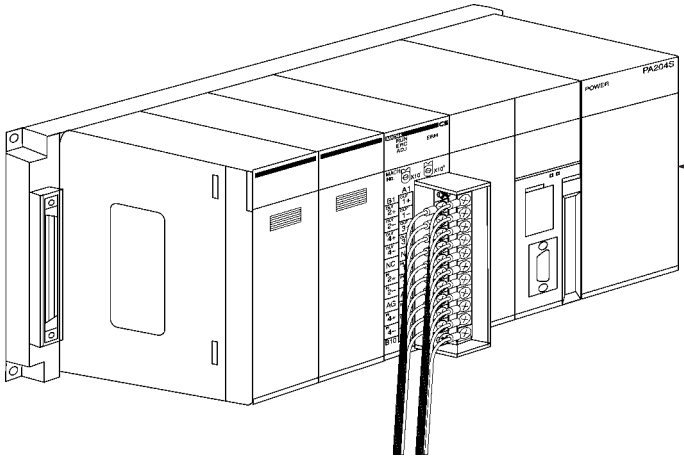

Creating Ladder Programs

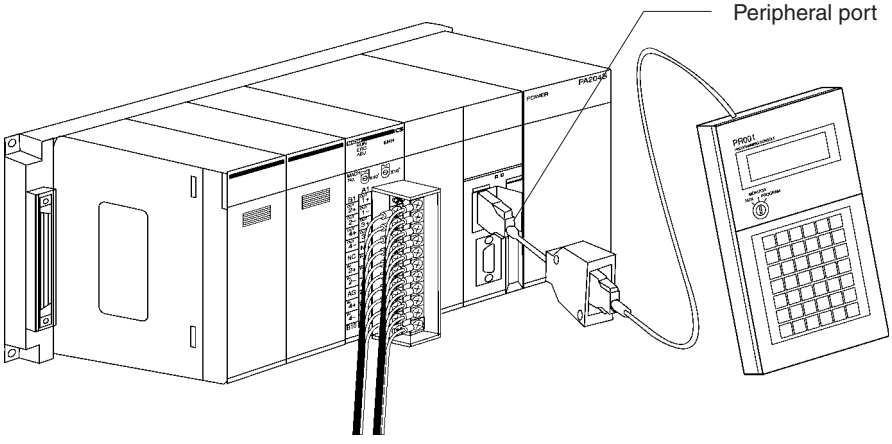

The data that is converted from analog to digital and output to CIO words (n + 1) to (n+ 7) of the Special I/O Unit Area (CIO 2011 to CIO2017), is stored in the specified addresses D00100 to D00106 as signed binary values 0000 to 0FA0 hex.

- The following table shows the addresses used for analog input.

Input number	Input signal range	Input conversion value address (n = CIO 2010) (See note 1.)	Conversion data holding address (See note 2.)
1	1 to 5 V	(n+1) = CIO 2011	D00100
2	1 to 5 V	(n+2) = CIO 2012	D00101
3	4 to 20 mA	(n+3) = CIO 2013	D00102
4	4 to 20 mA	(n+4) = CIO 2014	D00103
5	0 to 10 V	(n+5) = CIO2015	D00104
6	0 to 10 V	(n+6) = CIO2016	D00105
7	–10 to 10 V	(n+7) = CIO2017	D00106
8	Not used	---	---

Note

1. The addresses are fixed according to the unit number of the Special I/O Unit. Refer to *2-3-2 Unit Number Switches* for further details.
2. Set as required.

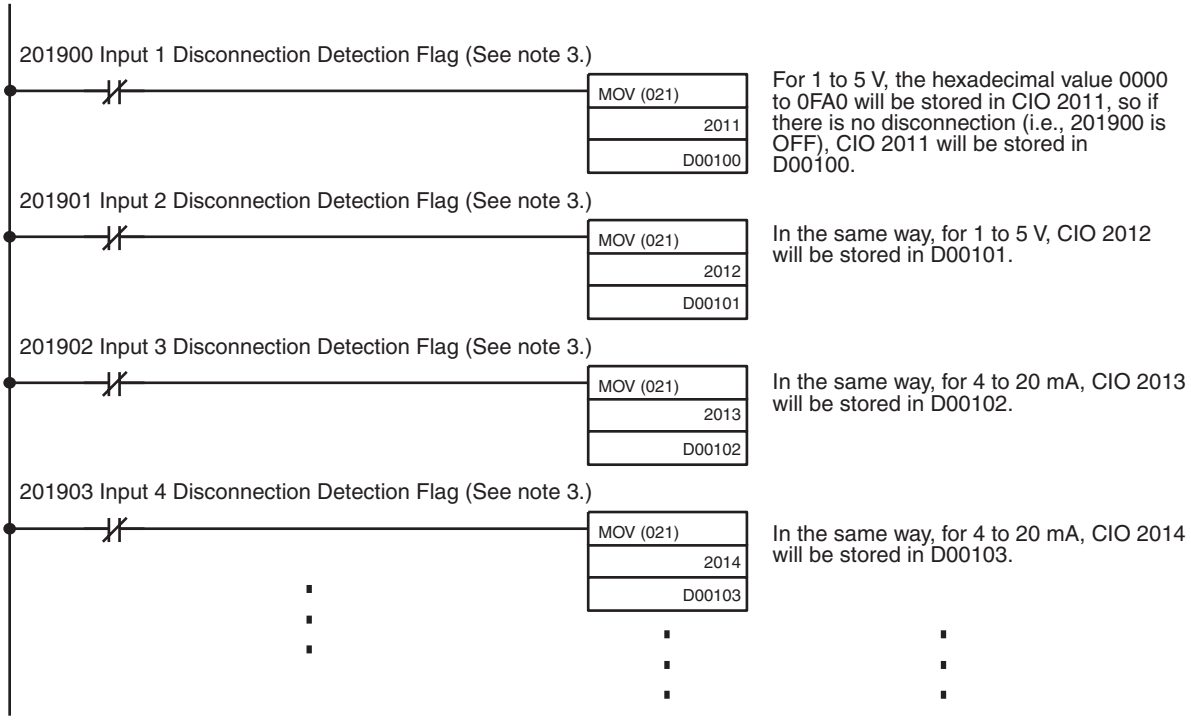

3. Bits 00 to 07 of word (n + 9) are allocated to the input Disconnection Detection Flags. Refer to *Allocations for Normal Mode* on page 51 for further details.

2-3 Components and Switch Settings

CS1W-AD041-V1

Front

With Terminal Block

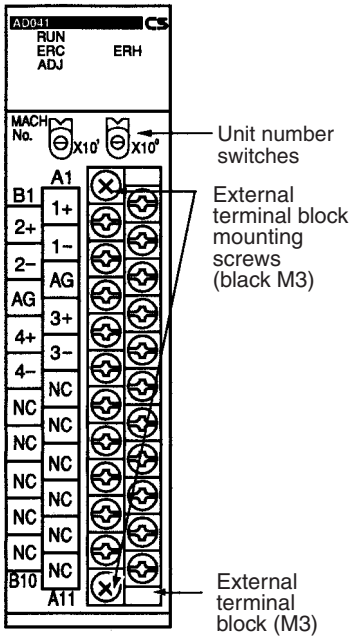

With Terminal Block Removed

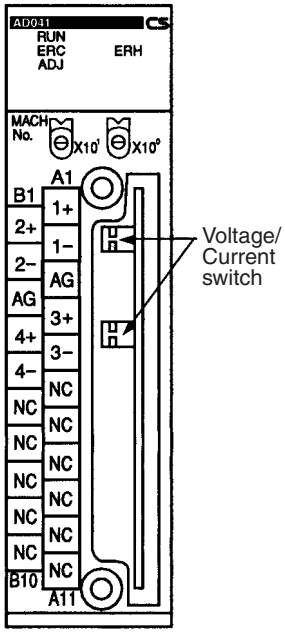

CS1W-AD081-V1

Front

With Terminal Block

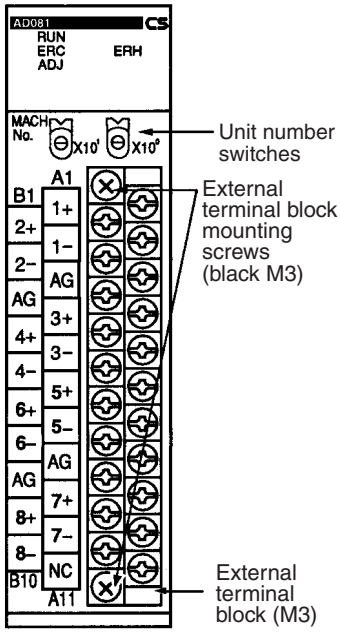

With Terminal Block Removed

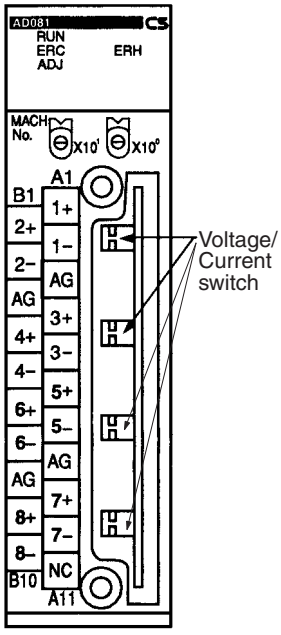

Back

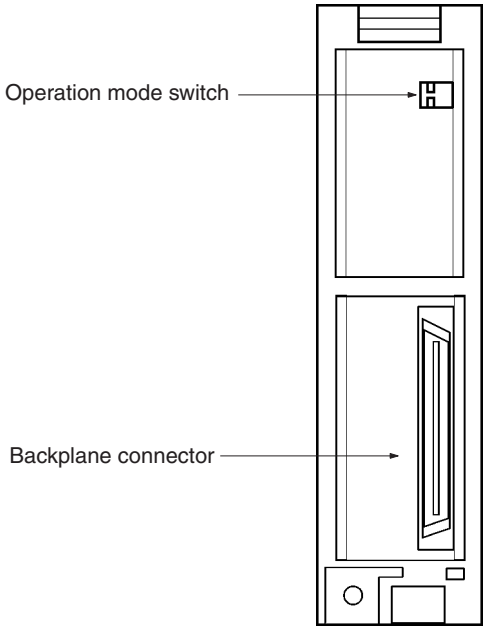

Side

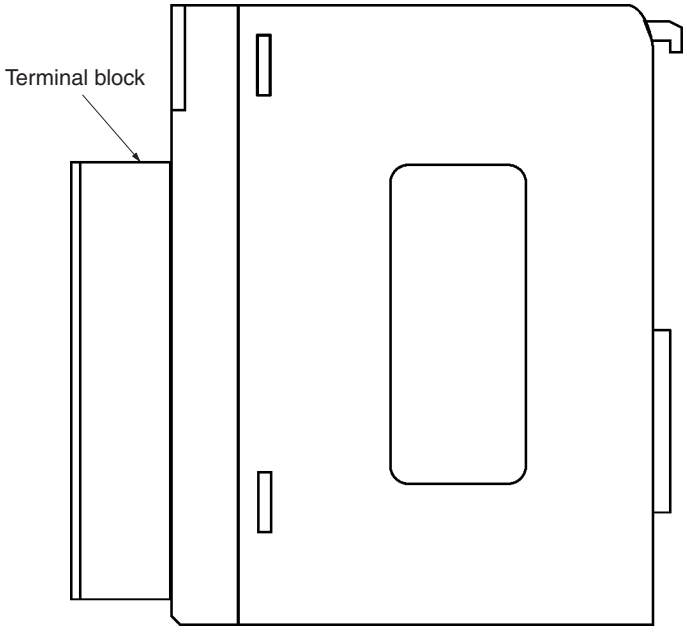

The terminal block is attached by a connector. It can be removed by loosening the two black mounting screws located at the top and bottom of the terminal block.

Check to be sure that the black terminal block mounting screw is securely tightened to a torque of 0.5 N·m.

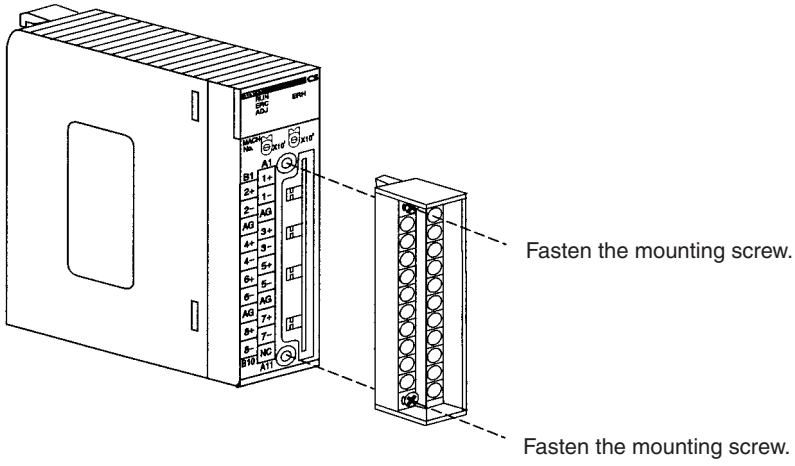

CS1W-AD161

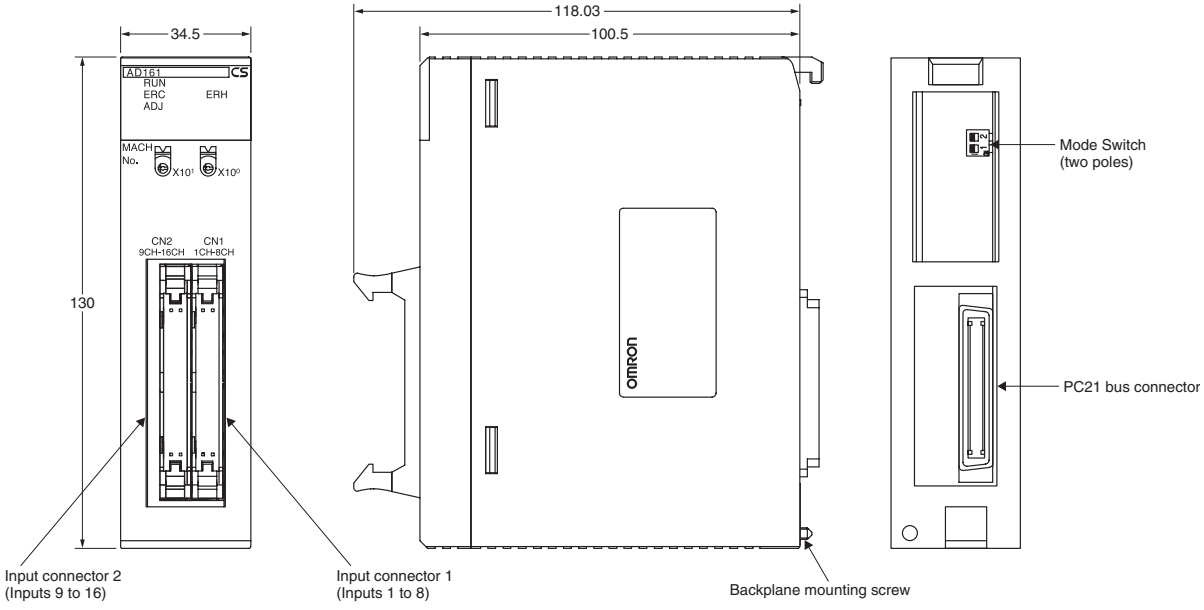

2-3-1 Indicators

The indicators show the operating status of the Unit. The following table shows the meanings of the indicators.

Indicator	Meaning	Indicator status	Operating status
RUN (green)	Operating	Lit	Operating in normal mode.
		Not lit	Unit has stopped exchanging data with the CPU Unit.
ERC (red)	Error detected by Unit	Lit	Alarm has occurred (such as disconnection detection) or initial settings are incorrect.
		Not lit	Operating normally.

Indicator	Meaning	Indicator status	Operating status
ADJ (yellow)	Adjusting	Flashing	Operating in offset/gain adjustment mode.
		Not lit	Other than the above.
ERH (red)	Error in the CPU Unit	Lit	Error has occurred during data exchange with the CPU Unit.
		Not lit	Operating normally.

2-3-2 Unit Number Switches

The CPU Unit and Analog Input Unit exchange data via the Special I/O Unit Area in the CIO Area and DM Area. The words that are allocated to each Analog Input Unit in the Special I/O Unit Area in the CIO Area and DM Area are determined by the setting of the unit number switches on the front panel of the Unit.

Always turn OFF the power before setting the unit number. Use a flat-blade screwdriver, being careful not to damage the slot in the screw. Be sure not to leave the switch midway between settings.

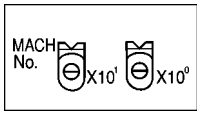

Switch setting	CS1W-AD041-V1/AD081-V1			CS1W-AD161 (See note 2.)		
	Unit number	Words allocated in Special/O Unit Area in CIO Area	Words allocated in Special/O Unit Area in DM Area	Unit number	Words allocated in Special/O Unit Area in CIO Area	Words allocated in Special/O Unit Area in DM Area
0	Unit #0	CIO 2000 to CIO 2009	D20000 to D20099	Unit #0	CIO 2000 to CIO 2019	D20000 to D20199
1	Unit #1	CIO 2010 to CIO 2019	D20100 to D20199	Unit #1	CIO 2010 to CIO 2029	D20100 to D20299
2	Unit #2	CIO 2020 to CIO 2029	D20200 to D20299	Unit #2	CIO 2020 to CIO 2039	D20200 to D20399
3	Unit #3	CIO 2030 to CIO 2039	D20300 to D20399	Unit #3	CIO 2030 to CIO 2049	D20300 to D20499
4	Unit #4	CIO 2040 to CIO 2049	D20400 to D20499	Unit #4	CIO 2040 to CIO 2059	D20400 to D20599
5	Unit #5	CIO 2050 to CIO 2059	D20500 to D20599	Unit #5	CIO 2050 to CIO 2069	D20500 to D20699
6	Unit #6	CIO 2060 to CIO 2069	D20600 to D20699	Unit #6	CIO 2060 to CIO 2079	D20600 to D20799
7	Unit #7	CIO 2070 to CIO 2079	D20700 to D20799	Unit #7	CIO 2070 to CIO 2089	D20700 to D20899
8	Unit #8	CIO 2080 to CIO 2089	D20800 to D20899	Unit #8	CIO 2080 to CIO 2099	D20800 to D20999
9	Unit #9	CIO 2090 to CIO 2099	D20900 to D20999	Unit #9	CIO 2090 to CIO 2109	D20900 to D21099
10	Unit #10	CIO 2100 to CIO 2109	D21000 to D21099	Unit #10	CIO 2100 to CIO 2119	D21000 to D21199
to	to	to	to	to	to	to
n	Unit #n	CIO 2000 + (n x 10) to CIO 2000 + (n x 10) + 9	D20000 + (n x 100) to D20000 + (n x 100) + 99	Unit #n	CIO 2000 + (n x 10) to CIO 2000 + (n x 10) + 19	D20000 + (n x 100) to D20000 + (n x 100) + 199
to	to	to	to	to	to	to

Switch setting	CS1W-AD041-V1/AD081-V1			CS1W-AD161 (See note 2.)		
	Unit number	Words allocated in Special/O Unit Area in CIO Area	Words allocated in Special/O Unit Area in DM Area	Unit number	Words allocated in Special/O Unit Area in CIO Area	Words allocated in Special/O Unit Area in DM Area
94	Unit #94	CIO 2940 to CIO 2949	D29400 to D29499	Unit #94	CIO 2940 to CIO 2959	D29400 to D29499
95	Unit #95	CIO 2950 to CIO 2959	D29500 to D29599	Not used.	---	---

Note

1. If two or more Special I/O Units are assigned the same unit number, a "UNIT No. DPL ERR" error (in the Programming Console) will be generated (A40113 will turn ON) and the PLC will not operate.
2. A single CS1W-AD161 is allocated CIO Area words and DM Area words for two Units. Be sure to set a unit number so that the CS1W-AD161 is not allocated words in the CIO Area and DM Area that are already allocated to other Special I/O Units. For example, if the CS1W-AD161 is set to unit number n, another Special I/O Unit cannot be set with unit number n+1. The highest unit number that can be set for a CS1W-AD161 is unit number 94.

2-3-3 Operation Mode Switch

The operation mode switch on the back panel of the Unit is used to set the operation mode to either normal mode or adjustment mode (for adjusting offset and gain).

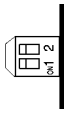

Pin number		Mode
1	2	
OFF	OFF	Normal mode
ON	OFF	Adjustment mode

Note

1. The operation mode can be set in the DM Area as an alternative to using the operation mode switch.
2. Set the operation mode in DM word m+18 for CS1W-AD041-V1 and CS1W-AD081-V1, and in DM word m+19 for CS1W-AD161.

CS1W-AD041-V1/AD081-V1

Bit	15	14	13	12	11	10	09	08	07	06	05	04	03	02	01	00
D (m+18)	Conversion time/resolution setting								Operation mode setting 00: Normal mode C1: Adjustment mode							

m = D20000 + (unit number x 100)

CS1W-AD161

Bit	15	14	13	12	11	10	09	08	07	06	05	04	03	02	01	00
D (m+19)	Conversion time/resolution setting								Operation mode setting 00: Normal mode C1: Adjustment mode							

m = D20000 + (unit number x 100)

Relationship between Operation Mode Switch Setting and DM Area Setting

Operation mode switch	DM Area setting	Analog Input Unit operation mode
Normal mode (default)	Normal mode	Normal mode
	Adjustment mode	Adjustment mode
Adjustment mode	Normal mode	
	Adjustment mode	

The Unit will operate in normal mode when both the operation mode switch and DM Area setting are set to normal mode. If either or both of the settings are set to adjustment mode, the Unit will operate in adjustment mode. The operation mode will change whenever the power is restarted or any of the Special I/O Unit Restart Bits (A502 to A507) turn ON.

2-3-4 Voltage/Current Switch (CS1W-AD041-V1/AD081-V1)

The analog conversion input can be switched from voltage input to current input by changing the pin settings on the voltage/current switch located on the back of the terminal block.

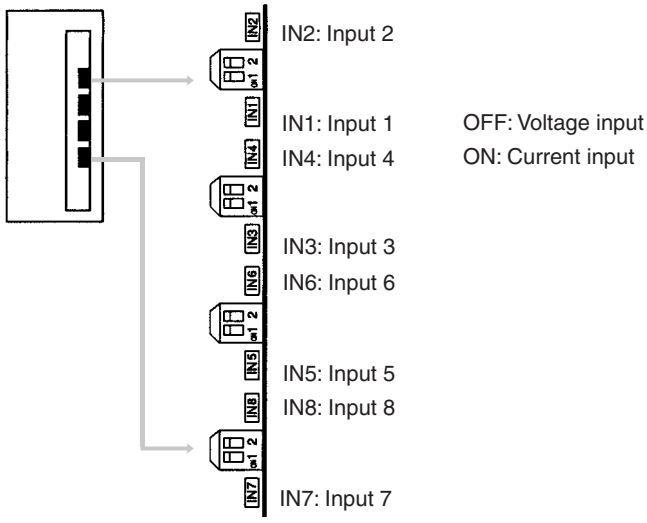

Note 1. There are only four inputs for the CS1W-AD041-V1.
2. With CS1W-AD161, select voltage/current input by wiring the connector terminals.

⚠ **Caution** Be sure to turn OFF the power to the PLC before mounting or removing the terminal block or connector.

2-4 Wiring

2-4-1 Terminal Arrangement

The signal names corresponding to the connecting terminals are as shown in the following diagram.

CS1W-AD041-V1

Input 2 (+)	B1	A1	Input 1 (+)
Input 2 (–)	B2	A2	Input 1 (–)
AG	B3	A3	AG
Input 4 (+)	B4	A4	Input 3 (+)
Input 4 (–)	B5	A5	Input 3 (–)
N.C.	B6	A6	N.C.
N.C.	B7	A7	N.C.
N.C.	B8	A8	N.C.
N.C.	B9	A9	N.C.
N.C.	B10	A10	N.C.
		A11	N.C.

CS1W-AD081-V1

Input 2 (+)	B1	A1	Input 1 (+)
Input 2 (–)	B2	A2	Input 1 (–)
AG	B3	A3	AG
Input 4 (+)	B4	A4	Input 3 (+)
Input 4 (–)	B5	A5	Input 3 (–)
Input 6 (+)	B6	A6	Input 5 (+)
Input 6 (–)	B7	A7	Input 5 (–)
AG	B8	A8	AG
Input 8 (+)	B9	A9	Input 7 (+)
Input 8 (–)	B10	A10	Input 7 (–)
		A11	N.C.

CS1W-AD161

CN2 Inputs 9 to16

Input 9+	1	2	Input 10+
Current mode 9	3	4	Current mode 10
Input 9–	5	6	Input 10–
AG	7	8	AG
Input 11+	9	10	Input 12+
Current mode 11	11	12	Current mode 12
Input 11–	13	14	Input 12–
AG	15	16	AG
Input 13+	17	18	Input 14+
Current mode 13	19	20	Current mode 14
Input 13–	21	22	Input 14–
AG	23	24	AG
Input 15+	25	26	Input 16+
Current mode 15	27	28	Current mode 16
Input 15–	29	30	Input 16–
AG	31	32	AG
NC	33	34	NC

CN1 Inputs 1 to 8

Input 1+	1	2	Input 2+
Current mode 1	3	4	Current mode 2
Input 1–	5	6	Input 2–
AG	7	8	AG
Input 3+	9	10	Input 4+
Current mode 3	11	12	Current mode 4
Input 3–	13	14	Input 4–
AG	15	16	AG
Input 15+	17	18	Input 6+
Current mode 5	19	20	Current mode 6
Input 5–	21	22	Input 6–
AG	23	24	AG
Input 7+	25	26	Input 8+
Current mode 7	27	28	Current mode 8
Input 7–	29	30	Input 8–
AG	31	32	AG
NC	33	34	NC

Note
1. The number of analog inputs that can be used is set in the DM Area.
2. The input signal ranges for individual inputs are set in the DM Area.The input signal range can be set separately for each input.
3. The AG terminals (A8, B8) are connected to the 0-V analog circuit in the Unit. Connecting shielded input lines can improve noise resistance.

⚠ **Caution** Do not make any connections to the N.C. terminals.

2-4-2 Internal Circuitry

The following diagrams show the internal circuitry of the analog input section.

Input Circuitry

CS1W-AD041-V1/AD081-V1

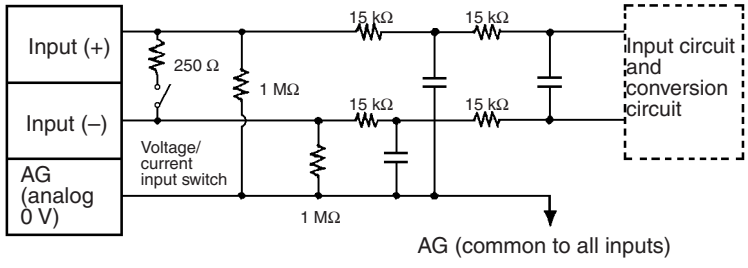

CS1W-AD161

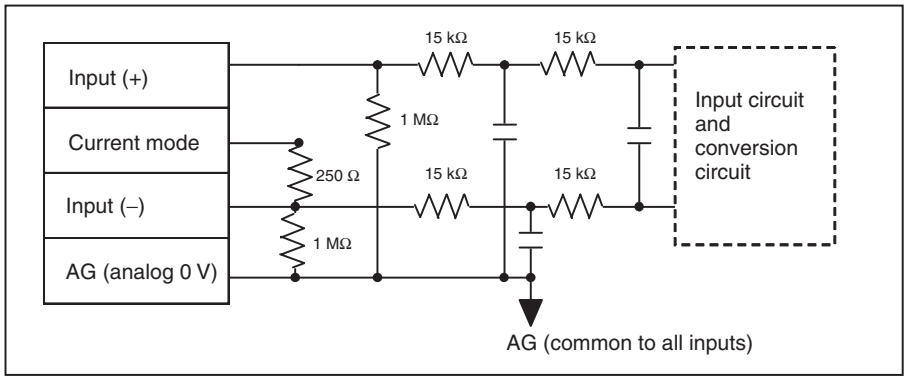

Internal Configuration

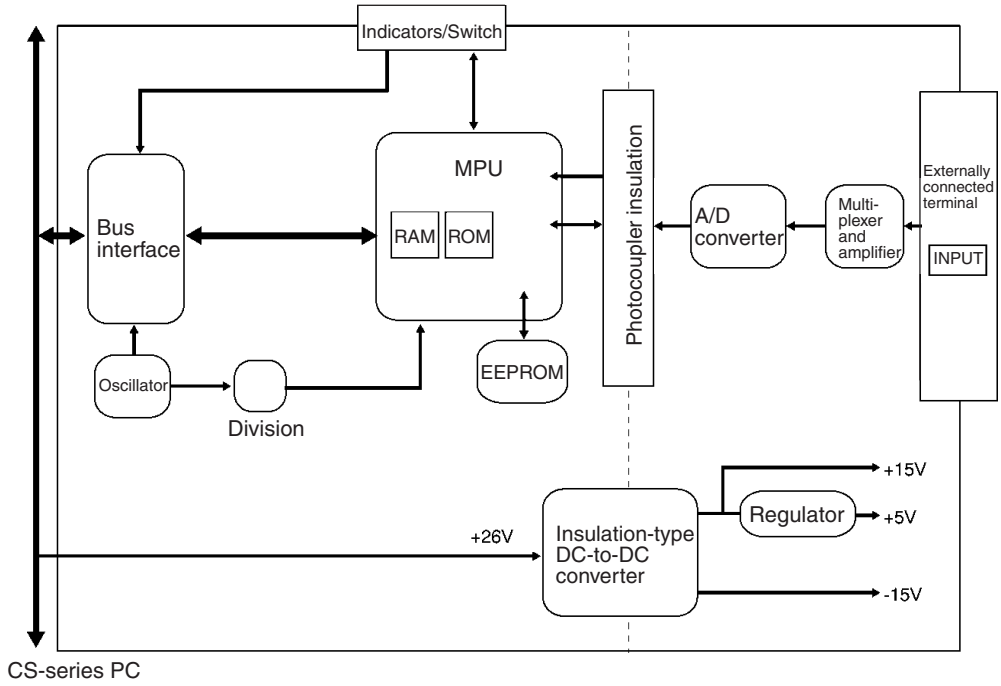

2-4-3 Voltage Input Disconnection

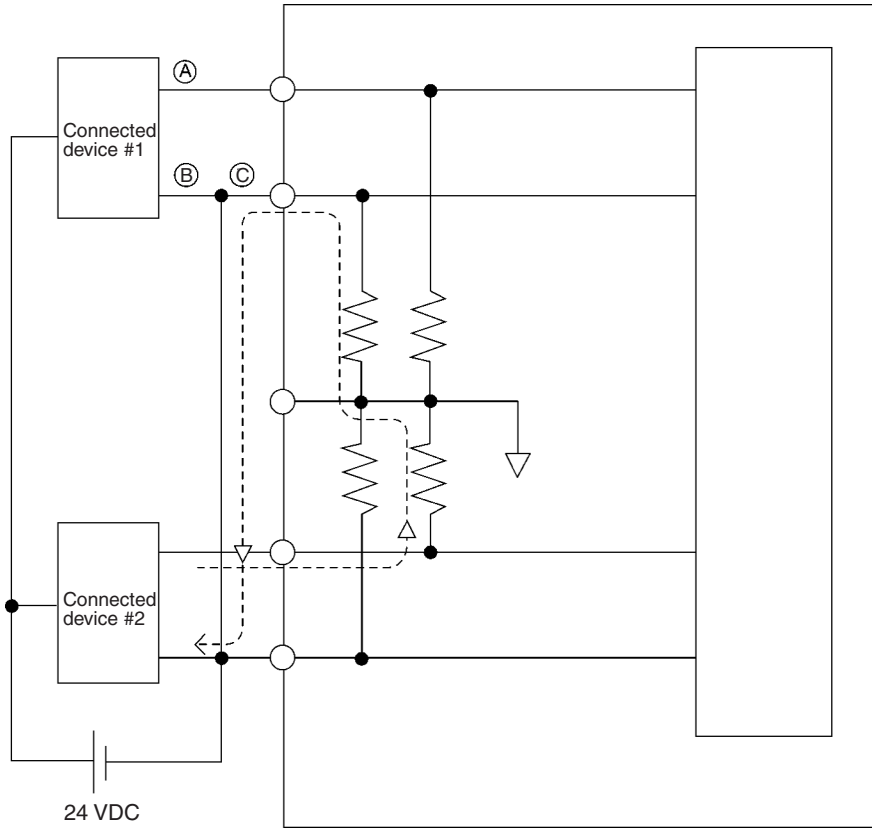

Note If the connected device #2 in the above example outputs 5 V and the power supply is shared by 2 channels as shown in the above diagram, approximately one third of the voltage, or 1.6 V, will be input at input 1.

When voltage inputs are used and a disconnection occurs, separate the power supply at the side of the connected devices or use an insulating device (isolator) for each input to avoid the following problems.

When the power supply at the connected devices is shared and section A or B is disconnected, power will flow in the direction of the broken line and the output voltage of the other connected devices will be reduced to between a third to a half of the voltage. If 1 to 5 V is used and the reduced voltage output, disconnection may not be detectable. If section C is disconnected, the power at the (–) input terminal will be shared and disconnection will not be detectable.

For current inputs, sharing the power supply between the connected devices will not cause any problems.

2-4-4 Input Wiring Example

CS1W-AD041-V1/AD081-V1

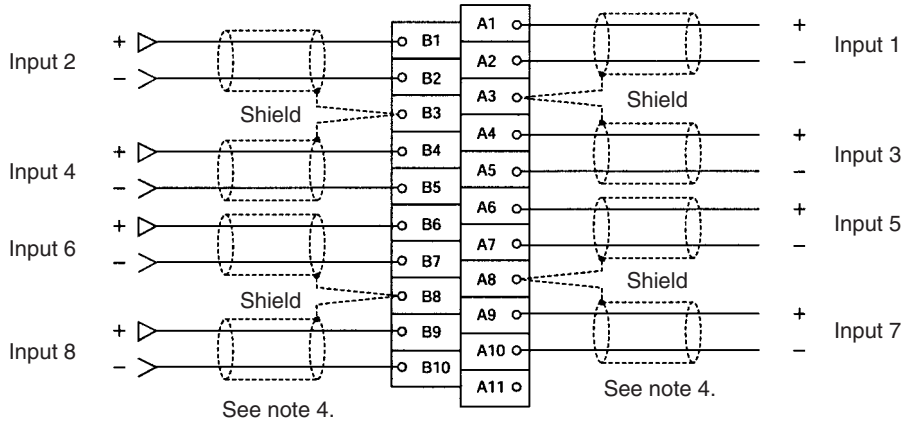

Note

1. When using current inputs, pins IN1 to IN8 (pins IN1 to IN4 for the CS1W-AD041-V1) of the voltage/current switch must be set to ON. Refer to *2-3-4 Voltage/Current Switch (CS1W-AD041-V1/AD081-V1)* for further details.
2. For inputs that are not used, either set to “0: Not used” in the input number settings (refer to *2-6-1 Input Settings and Conversion Values*) or short-circuit the voltage input terminals (V+) and (V–). If this is not performed and the inputs are set for the 1 to 5-V or 4 to 20-mA range, the Line Disconnection Flag will turn ON.
3. Crimp-type terminals must be used for terminal connections, and the screws must be tightened securely. Use M3 screws and tighten them to a torque of 0.5 N·m.
4. When connecting the shield of the analog input cables to the Unit’s AG terminals, as shown in the above diagram, use a wire that is 30 cm max. in length if possible.

⚠ **Caution** Do not connect anything to N.C. terminals shown in the wiring diagram on page 36.

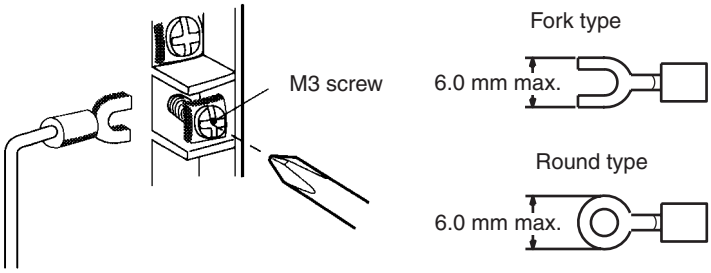

Connect the analog input line shield to the AG terminal on the Analog Input Unit to improve noise resistance.

CS1W-AD161

Use OMRON's XW2D-34G6 Connector-Terminal Conversion Unit and Special Connection Cable for input wiring.

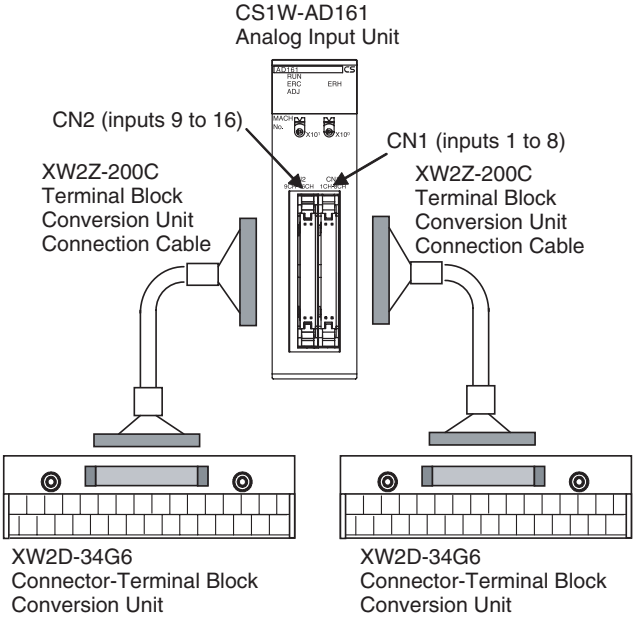

Terminal Block Pin Arrangement

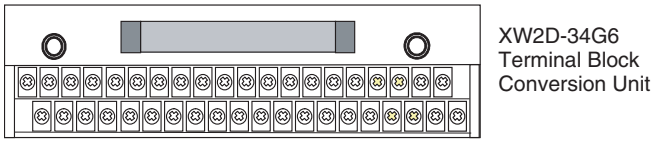

Upper level	A1	A2	A3	to	A16	A17	
Lower level		B1	B2	B3	to	B16	B17

CN1 to Terminal Block Conversion

Input 1+	Current mode 1	Input 1–	AG	Input 3+	Current mode 3	Input 3–	AG	Input 5+	Current mode 5	Input 5–	AG	Input 7+	Current mode 7	Input 7–	AG	NC
A1	A2	A3	A4	A5	A6	A7	A8	A9	A10	A11	A12	A13	A14	A15	A16	A17

Input 2+	Current mode 2	Input 2–	AG	Input 4+	Current mode 4	Input 4–	AG	Input 6+	Current mode 6	Input 6–	AG	Input 8+	Current mode 8	Input 8–	AG	NC
B1	B2	B3	B4	B5	B6	B7	B8	B9	B10	B11	B12	B13	B14	B15	B16	B17

CN2 to Terminal Block Conversion

Input 9+	Current mode 9	Input 9–	AG	Input 11+	Current mode 11	Input 11–	AG	Input 13+	Current mode 13	Input 13–	AG	Input 15+	Current mode 15	Input 15–	AG	NC
A1	A2	A3	A4	A5	A6	A7	A8	A9	A10	A11	A12	A13	A14	A15	A16	A17

Input 10+	Current mode 10	Input 10–	AG	Input 12+	Current mode 12	Input 12–	AG	Input 14+	Current mode 14	Input 14–	AG	Input 16+	Current mode 16	Input 16–	AG	NC
B1	B2	B3	B4	B5	B6	B7	B8	B9	B10	B11	B12	B13	B14	B15	B16	B17

Voltage Input Wiring

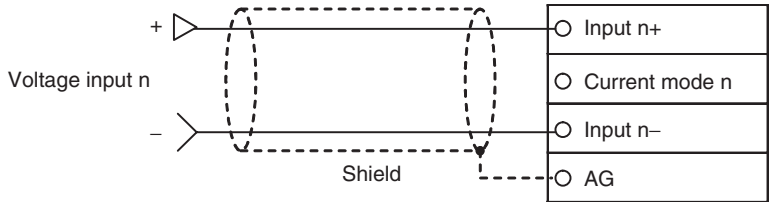

Current Input Wiring

Short-circuit the input(+) and current mode terminals when using current input.

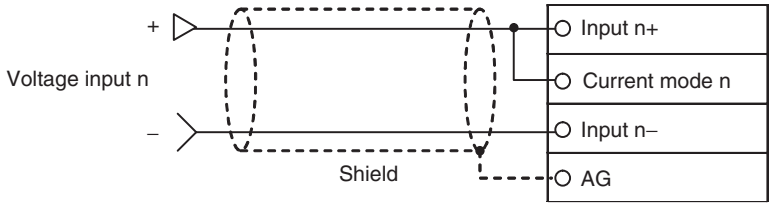

With the CS1W-AD161, select voltage input or current input by wiring the connector terminals. Voltage and current selection for input ranges 1 to 5 V and 4 to 20 mA, respectively, can also be set in DM word m+52.

Use crimp terminals to wire the terminal block.

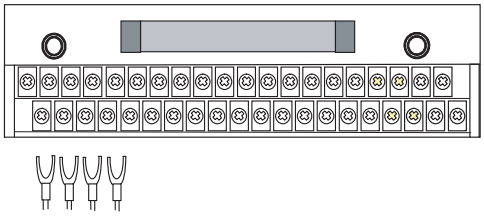

Note The following Connectors are included with the CS1W-AD161. Use them if you are going to make your own cable (e.g., if you are not going to use an OMRON Connector-Terminal Block Conversion Unit).

Name	Connection method	Manufacturer	Model number	Qty. included
Applicable Connector (34-pin)	Pressure welded	OMRON	XG4M-3430-T	2

2-4-5 Input Wiring Considerations

When wiring inputs, apply the following points to avoid noise interference and optimize Analog Input Unit performance.

- Use two-core shielded twisted-pair cables for input connections.
- Route input cables separately from the AC cable, and do not run the Unit's cables near a main circuit cable, high voltage cable, or a non-PLC load cable.
- If there is noise interference from power lines (if, for example, the power supply is shared with electrical welding devices or electrical discharge machines, or if there is a high-frequency generation source nearby) install a noise filter at the power supply input area.

2-5 Exchanging Data with the CPU Unit

2-5-1 Outline of Data Exchange

Data is exchanged between the CPU Unit and the CS1W-AD041-V1/081-V1/AD161 Analog Input Unit via the Special I/O Unit Area in the CIO Area (for data used to operate the Unit) and the Special I/O Unit in the DM Area (for data used for initial settings).

I/O Refresh Data

Analog input conversion values, which are used as data for Unit operation, are allocated in the Special I/O Unit Area in the CIO Area of the CPU Unit according to the unit number, and are exchanged during I/O refreshing.

Fixed Data

The Unit's fixed data, such as the analog input signal ranges and the number of operational mean value buffers is allocated in the Special I/O Unit DM Area of the CPU Unit according to the unit number, and is exchanged when the power is turned ON or the Unit is restarted.

The conversion time and resolution can be set, along with the operation mode.

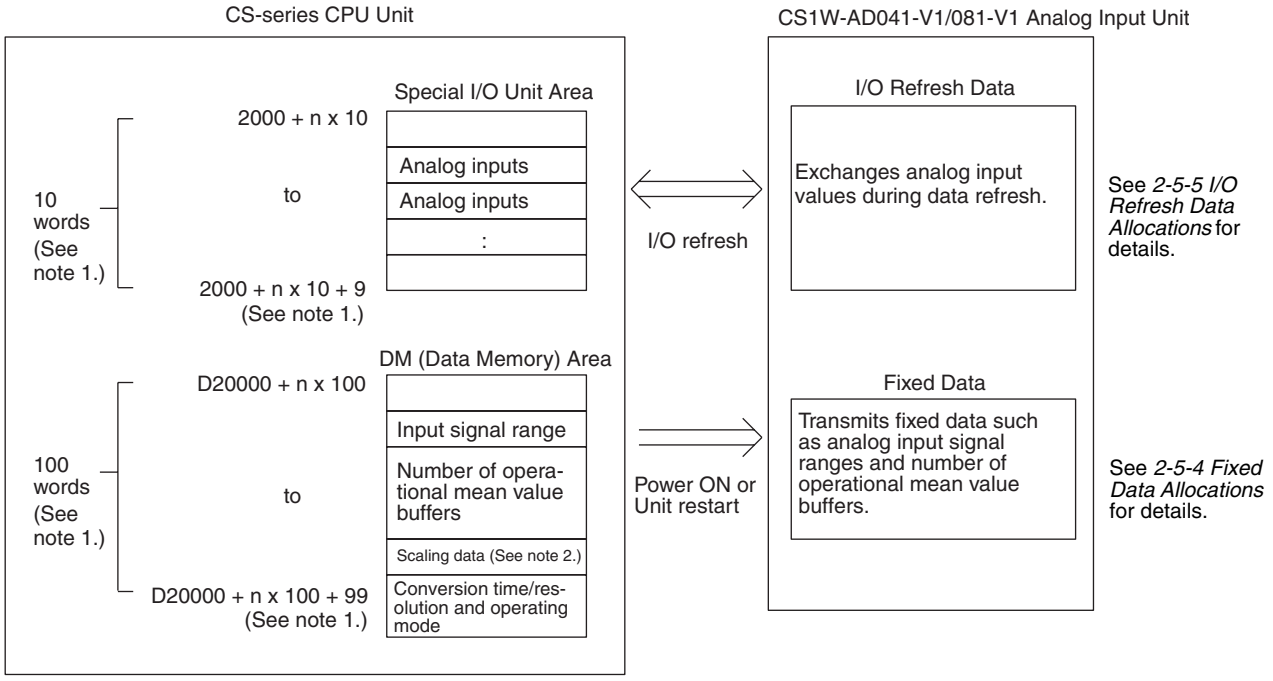

Note 1. A single CS1W-AD161 is allocated CIO Area words and DM Area words for two Units, i.e., 20 words in the CIO Area (CIO 2000 + n × 10 to CIO 2000 + n × 10 + 19) and 200 words in the DM Area (D20000 + n × 100 to D20000 + n × 100 + 199).

2. Transferring scaling data is supported by CS1W-AD161 only.

2-5-2 Unit Number Settings

The Special I/O Unit Area and Special I/O Unit DM Area word addresses that each Analog Input Unit occupies are set by the unit number switches on the front panel of the Unit.

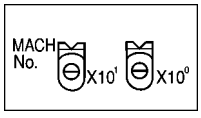

Switch setting	CS1W-AD041-V1/AD081-V1			CS1W-AD161 (See note 2.)		
	Unit number	Words allocated in Special I/O Unit Area in CIO Area	Words allocated in Special I/O Unit Area in DM Area	Unit number	Words allocated in Special I/O Unit Area in CIO Area	Words allocated in Special I/O Unit Area in DM Area
0	Unit #0	CIO 2000 to CIO 2009	D20000 to D20099	Unit #0	CIO 2000 to CIO 2019	D20000 to D20199
1	Unit #1	CIO 2010 to CIO 2019	D20100 to D20199	Unit #1	CIO 2010 to CIO 2029	D20100 to D20299
2	Unit #2	CIO 2020 to CIO 2029	D20200 to D20299	Unit #2	CIO 2020 to CIO 2039	D20200 to D20399
3	Unit #3	CIO 2030 to CIO 2039	D20300 to D20399	Unit #3	CIO 2030 to CIO 2049	D20300 to D20499
4	Unit #4	CIO 2040 to CIO 2049	D20400 to D20499	Unit #4	CIO 2040 to CIO 2059	D20400 to D20599

Switch setting	CS1W-AD041-V1/AD081-V1			CS1W-AD161 (See note 2.)		
	Unit number	Words allocated in Special I/O Unit Area in CIO Area	Words allocated in Special I/O Unit Area in DM Area	Unit number	Words allocated in Special I/O Unit Area in CIO Area	Words allocated in Special I/O Unit Area in DM Area
5	Unit #5	CIO 2050 to CIO 2059	D20500 to D20599	Unit #5	CIO 2050 to CIO 2069	D20500 to D20699
6	Unit #6	CIO 2060 to CIO 2069	D20600 to D20699	Unit #6	CIO 2060 to CIO 2079	D20600 to D20799
7	Unit #7	CIO 2070 to CIO 2079	D20700 to D20799	Unit #7	CIO 2070 to CIO 2089	D20700 to D20899
8	Unit #8	CIO 2080 to CIO 2089	D20800 to D20899	Unit #8	CIO 2080 to CIO 2099	D20800 to D20999
9	Unit #9	CIO 2090 to CIO 2099	D20900 to D20999	Unit #9	CIO 2090 to CIO 2109	D20900 to D21099
10	Unit #10	CIO 2100 to CIO 2109	D21000 to D21099	Unit #10	CIO 2100 to CIO 2119	D21000 to D21199
to	to	to	to	to	to	to
n	Unit #n	CIO 2000 + (n × 10) to CIO 2000 + (n × 10) + 9	D20000 + (n × 100) to D20000 + (n × 100) + 99	Unit #n	CIO 2000 + (n × 10) to CIO 2000 + (n × 10) + 19	D20000 + (n × 100) to D20000 + (n × 100) + 199
to	to	to	to	to	to	to
94	Unit #94	CIO 2940 to CIO 2949	D29400 to D29499	Unit #94	CIO 2940 to CIO 2959	D29400 to D29499
95	Unit #95	CIO 2950 to CIO 2959	D29500 to D29599	Not used.	---	---

Note
1. If two or more Special I/O Units are assigned the same unit number, a “UNIT No. DPL ERR” error (in the Programming Console) will be generated (A40113 will turn ON) and the PLC will not operate.
2. Be sure to set a unit number such that the CS1W-AD161 is not allocated words in the CIO Area and DM Area that are already allocated to other Special I/O Units. The unit number can be set between 0 and 94.

2-5-3 Special I/O Unit Restart Bits

To restart the Unit after changing the contents of the DM Area or correcting an error, cycle the power supply to the PLC or turn ON the Special I/O Unit Restart Bit.

Special I/O Unit Area word address	Function	
A50200	Unit No. 0 Restart Bit	Restarts the Unit when turned ON and then OFF again.
A50201	Unit No. 1 Restart Bit	
to	to	
A50215	Unit No. 15 Restart Bit	
A50300	Unit No. 16 Restart Bit	
to	to	
A50715	Unit No. 95 Restart Bit	

A single CS1W-AD161 is allocated words for two unit numbers, but uses only the Special I/O Unit Restart Bit setting corresponding to the unit number that is set.

Note Replace the Unit if the error is not cleared even though the power supply is cycled or the Restart Bit is turned ON.

2-5-4 Fixed Data Allocations

Allocations in DM Area

The initial settings of the Analog Input Unit are set according to the data allocated in the Special I/O Unit Area in the DM Area. Settings, such as the inputs used and the analog input signal range must be set in this area.

CS1W-AD041-V1/AD081-V1

SYSMAC CS-series CPU Unit

(Special I/O Unit DM Area)

	Word
Unit #0	D20000 to D20099
Unit #1	D20100 to D20199
Unit #2	D20200 to D20299
Unit #3	D20300 to D20399
Unit #4	D20400 to D20499
Unit #5	D20500 to D20599
Unit #6	D20600 to D20699
Unit #7	D20700 to D20799
Unit #8	D20800 to D20899
Unit #9	D20900 to D20999
Unit #10	D21000 to D21099
to	to
Unit #n	D20000 + (n × 100) to D20000 + (n × 100) + 99
to	to
Unit #95	D29500 to D29599

Data is automatically transferred to each unit number when the power is turned ON, or when the Special I/O Unit Restart Bit is turned ON.

CS1W-AD041-V1/081-V1 Analog Input Unit

(Fixed Data Area)

D (m)	Input conversion permission loop mode setting
D (m+1)	Input signal range
D (m+2 to m+9) (See note 1.)	Sets number of samplings for mean value processing
D (m+18) (See note 2.)	Conversion time/ resolution and operation mode

m = 20000 + (unit number × 100)

Note Only D(m) to D(m+5) are supported by the CS1W-AD041-V1.

CS1W-AD161

CS-series CPU Unit

Special I/O Unit DM Area

	Allocated DM Area words
Unit #0	D20000 to D20199
Unit #1	D20100 to D20299
Unit #2	D20200 to D20399
Unit #3	D20300 to D20499
Unit #4	D20400 to D20599
Unit #5	D20500 to D20699
Unit #6	D20600 to D20799
Unit #7	D20700 to D20899
Unit #8	D20800 to D20999
Unit #9	D20900 to D21099
Unit #10	D21000 to D21199
to	to
Unit #N	D20000 + n × 100 to D20000 + n × 100 +99
to	to
Unit #94	D29400 to D29599
Unit #95	Cannot be used.

⇔

Automatically transfers settings when the power is turned ON or the Special I/O Unit Restart Bits turn ON.

CS1W-AD161
Analog Input Unit

Initial data

D (m)	Input conversion enabled/disabled
D (m+1) D (m+2)	Input signal range
D (m+3) to D (m+18)	Number of mean value processing sampling operations
D (m+19)	Conversion time/ resolution, operation mode setting
D (m+20) to D (m+51)	Scaling data
D (m+52)	Voltage/current range specification (enabled when using 1 to 5 V/4 to 20 mA)

m = 20000 + (Unit number × 100)

Note

1. The words in the Special I/O Unit DM Area that are allocated to the Analog Input Unit are determined by the setting of the unit number switches on the front panel of the Unit. Refer to *2-5-2 Unit Number Settings* for details on the method used to set the unit number switches.
2. If two or more Special I/O Units are assigned the same unit number, a “UNIT No. DPL ERR” error (in the Programming Console) will be generated (A40113 will turn ON) and the PLC will not operate.

Allocations in DM Area

The following table shows the allocation of DM Area words and bits for both normal and adjustment mode.

CS1W-AD041-V1

DM Area word (See note.)	Bits															
	15	14	13	12	11	10	9	8	7	6	5	4	3	2	1	0
D (m)	Not used. (Settings are ignored.)								Not used.				Input use setting			
													Input 4	Input 3	Input 2	Input 1
D (m+1)	Not used. (Settings are ignored.)								Input range setting							
									Input 4		Input 3		Input 2		Input 1	
D (m+2)	Input 1: Mean value processing setting															
D (m+3)	Input 2: Mean value processing setting															
D (m+4)	Input 3: Mean value processing setting															
D (m+5)	Input 4: Mean value processing setting															
D (m+18)	Conversion time/resolution setting 00: Conversion time of 1 ms and resolution of 4,000 C1: Conversion time of 250 μs and resolution of 8,000								Operation mode setting 00: Normal mode C1: Adjustment mode							

Note For the DM word addresses, m = D20000 + (unit number x 100).

CS1W-AD081-V1

DM Area word (See note.)	Bits															
	15	14	13	12	11	10	9	8	7	6	5	4	3	2	1	0
D (m)	Not used. (Settings are ignored.)								Input use setting							
									Input 8	Input 7	Input 6	Input 5	Input 4	Input 3	Input 2	Input 1
D (m+1)	Input range setting															
	Input 8		Input 7		Input 6		Input 5		Input 4		Input 3		Input 2		Input 1	
D (m+2)	Input 1: Mean value processing setting															
D (m+3)	Input 2: Mean value processing setting															
D (m+4)	Input 3: Mean value processing setting															
D (m+5)	Input 4: Mean value processing setting															
D(m+6)	Input 5: Mean value processing setting															
D (m+7)	Input 6: Mean value processing setting															
D (m+8)	Input 7: Mean value processing setting															
D (m+9)	Input 8: Mean value processing setting															
D (m+18)	Conversion time/resolution setting 00: Conversion time of 1 ms and resolution of 4,000 C1: Conversion time of 250 μs and resolution of 8,000								Operation mode setting 00: Normal mode C1: Adjustment mode							

Note For the DM word addresses, m = D20000 + (unit number × 100).

CS1W-AD161

DM Area word (See note 1.)	Bits															
	15	14	13	12	11	10	9	8	7	6	5	4	3	2	1	0
D (m)	Input use setting															
	Input 16	Input 15	Input 14	Input 13	Input 12	Input 11	Input 10	Input 9	Input 8	Input 7	Input 6	Input 5	Input 4	Input 3	Input 2	Input 1
D (m+1)	Input range setting (inputs 1 to 8)															
	Input 8		Input 7		Input 6		Input 5		Input 4		Input 3		Input 2		Input 1	
D (m+2)	Input range setting (Inputs 9 to 16)															
	Input 16		Input 15		Input 14		Input 13		Input 12		Input 11		Input 10		Input 9	
D (m+3)	Input 1 mean value processing setting															
D (m+4)	Input 2 mean value processing setting															
D (m+5)	Input 3 mean value processing setting															
D (m+6)	Input 4 mean value processing setting															
D (m+7)	Input 5 mean value processing setting															
D (m+8)	Input 6 mean value processing setting															
D (m+9)	Input 7 mean value processing setting															
D (m+10)	Input 8 mean value processing setting															
D (m+11)	Input 9 mean value processing setting															
D (m+12)	Input 10 mean value processing setting															
D (m+13)	Input 11 mean value processing setting															
D (m+14)	Input 12 mean value processing setting															
D (m+15)	Input 13 mean value processing setting															
D (m+16)	Input 14 mean value processing setting															
D (m+17)	Input 15 mean value processing setting															
D (m+18)	Input 16 mean value processing setting															
D (m+19)	Conversion time/resolution setting								Operation mode setting							
D (m+20)	Input 1 scaling lower limit															
D (m+21)	Input 1 scaling upper limit															
D (m+22)	Input 2 scaling lower limit															
D (m+23)	Input 2 scaling upper limit															
D (m+24)	Input 3 scaling lower limit															
D (m+25)	Input 3 scaling upper limit															
D (m+26)	Input 4 scaling lower limit															
D (m+27)	Input 4 scaling upper limit															
D (m+28)	Input 5 scaling lower limit															
D (m+29)	Input 5 scaling upper limit															
D (m+30)	Input 6 scaling lower limit															
D (m+31)	Input 6 scaling upper limit															
D (m+32)	Input 7 scaling lower limit															
D (m+33)	Input 7 scaling upper limit															
D (m+34)	Input 8 scaling lower limit															
D (m+35)	Input 8 scaling upper limit															
D (m+36)	Input 9 scaling lower limit															
D (m+37)	Input 9 scaling upper limit															
D (m+38)	Input 10 scaling lower limit															
D (m+39)	Input 10 scaling upper limit															
D (m+40)	Input 11 scaling lower limit															
D (m+41)	Input 11 scaling upper limit															

DM Area word (See note 1.)	Bits															
	15	14	13	12	11	10	9	8	7	6	5	4	3	2	1	0
D (m+42)	Input 12 scaling lower limit															
D (m+43)	Input 12 scaling upper limit															
D (m+44)	Input 13 scaling lower limit															
D (m+45)	Input 13 scaling upper limit															
D (m+46)	Input 14 scaling lower limit															
D(m+47)	Input 14 scaling upper limit															
D (m+48)	Input 15 scaling lower limit															
D (m+49)	Input 15 scaling upper limit															
D (m+50)	Input 16 scaling lower limit															
D (m+51)	Input 16 scaling upper limit															
D (m+52)	Voltage/current range setting (Only for 1 to 5 V and 4 to 20 mA.)															
	Input 16	Input 15	Input 14	Input 13	Input 12	Input 11	Input 10	Input 9	Input 8	Input 7	Input 6	Input 5	Input 4	Input 3	Input 2	Input 1

Note For the DM word addresses, m = D20000 + (unit number x 100).

Set Values and Stored Values

Item		Contents	Page
Input	Use setting	0: Not used. 1: Used.	56
	Input signal range	00: –10 to 10 V 01: 0 to 10 V 10: 1 to 5 V/4 to 20 mA (See note 1.) 11: 0 to 5 V	56
	Mean value processing setting	0000: Mean value processing with 2 buffers (See note 3.) 0001: Mean value processing not used 0002: Mean value processing with 4 buffers 0003: Mean value processing with 8 buffers 0004: Mean value processing with 16 buffers 0005: Mean value processing with 32 buffers 0006: Mean value processing with 64 buffers	59
	Scaling setting	Only set for CS1W-AD161	64

Note

1. For CS1W-AD041-V1 and CS1W-AD081-V1, the input signal range of “1 to 5 V” and “4 to 20 mA” is switched using the pins of the voltage/current switch. Refer to *2-3-4 Voltage/Current Switch (CS1W-AD041-V1/AD081-V1)* for details. With CS1W-AD161, select voltage/current input by wiring the connector terminals.
2. The default of mean value processing setting is set to “Mean value processing with 2 buffers.” Refer to *2-6-3 Mean Value Processing*.
3. Voltage/current input selection can be set for input signal ranges of 1 to 5 V and 4 to 20 mA using the switch at the back of the terminal block for CS1W-AD041-V1 and CS1W-AD081-V1, or selected when wiring the connector or in DM word m+52 for CS1W-AD161.

2-5-5 I/O Refresh Data Allocations

I/O refresh data for the Analog Input Unit is exchanged according to the allocations in the Special I/O Unit Area.

CS1W-AD041-V1/AD081-V1

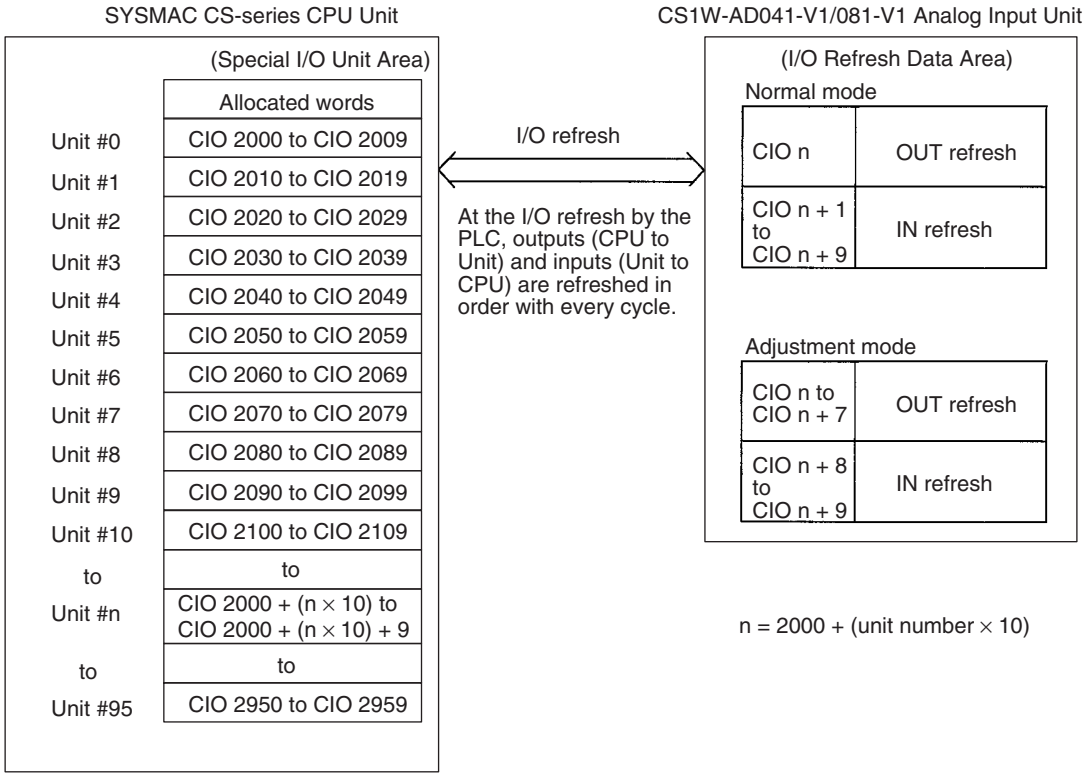

CS1W-AD161

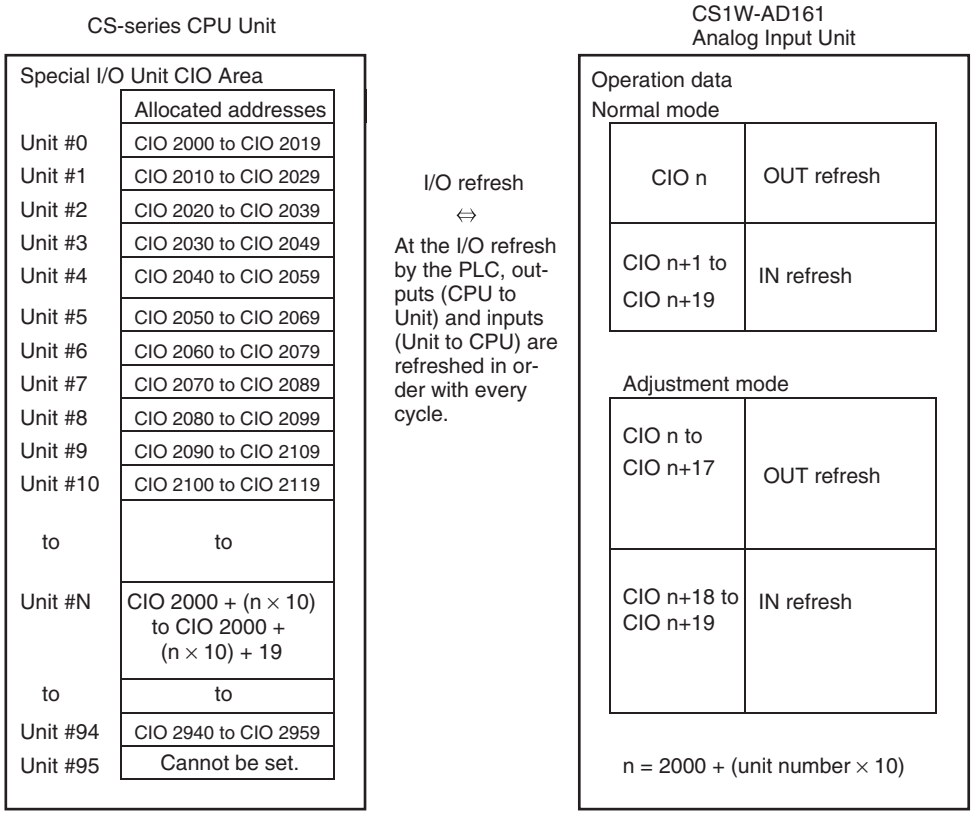

Note

1. The words in the Special I/O Unit Area in the CIO Area that are allocated to the Analog Input Unit are determined by the setting of the unit number switches on the front panel of the Unit. Refer to *2-5-2 Unit Number Settings* for details on the method used to set the unit number switches.
2. If two or more Special I/O Units are assigned the same unit number, a "UNIT No. DPL ERR" error (in the Programming Console) will be generated (A40113 will turn ON) and the PLC will not operate.

Allocations for Normal Mode

For normal mode, set to OFF the operation mode switch on the rear panel of the Unit as shown in the following diagram, or set bits 00 to 07 in DM word m+18.

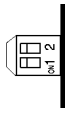

The allocation of words and bits in the CIO Area is shown in the following table.

CS1W-AD041-V1

I/O	Word	Bits															
		15	14	13	12	11	10	9	8	7	6	5	4	3	2	1	0
Output (CPU to Unit)	n	Not used.												Peak value hold			
														Input 4	Input 3	Input 2	Input 1
Input (Unit to CPU)	n + 1	Input 1 conversion value															
		16^3				16^2				16^1				16^0			
	n + 2	Input 2 conversion value															
	n + 3	Input 3 conversion value															
	n + 4	Input 4 conversion value															
	n + 5	Not used															
	n + 6	Not used															
	n + 7	Not used															
	n + 8	Not used															
	n + 9	Alarm Flags								Not used				Disconnection detection			
														Input 4	Input 3	Input 2	Input 1

Note For the CIO word addresses, n = CIO 2000 + unit number x 10.

CS1W-AD081-V1

I/O	Word	Bits															
		15	14	13	12	11	10	9	8	7	6	5	4	3	2	1	0
Output (CPU to Unit)	n	Not used.								Peak value hold							
										Input 8	Input 7	Input 6	Input 5	Input 4	Input 3	Input 2	Input 1
Input (Unit to CPU)	n + 1	Input 1 conversion value															
		16^3				16^2				16^1				16^0			
	n + 2	Input 2 conversion value															
	n + 3	Input 3 conversion value															
	n + 4	Input 4 conversion value															
	n + 5	Input 5 conversion value															
	n + 6	Input 6 conversion value															
	n + 7	Input 7 conversion value															
	n + 8	Input 8 conversion value															
	n + 9	Alarm Flags								Disconnection detection							
										Input 8	Input 7	Input 6	Input 5	Input 4	Input 3	Input 2	Input 1

Note For the CIO word addresses, n = CIO 2000 + unit number x 10.

CS1W-AD161

I/O	Word	Bits															
		15	14	13	12	11	10	9	8	7	6	5	4	3	2	1	0
Output (CPU to Unit)	n	Peak value hold															
		Input 16	Input 15	Input 14	Input 13	Input 12	Input 11	Input 10	Input 9	Input 8	Input 7	Input 6	Input 5	Input 4	Input 3	Input 2	Input 1
Input (Unit to CPU)	n + 1	Input 1 A/D conversion value															
		16^3				16^2				16^1				16^0			
	n + 2	Input 2 A/D conversion value															
	n + 3	Input 3 A/D conversion value															
	n + 4	Input 4 A/D conversion value															
	n + 5	Input 5 A/D conversion value															
	n + 6	Input 6 A/D conversion value															
	n + 7	Input 7 A/D conversion value															
	n + 8	Input 8 A/D conversion value															
	n + 9	Input 9 A/D conversion value															
	n + 10	Input 10 A/D conversion value															
	n + 11	Input 11 A/D conversion value															
	n + 12	Input 12 A/D conversion value															
	n + 13	Input 13 A/D conversion value															
	n + 14	Input 14 A/D conversion value															
	n + 15	Input 15 A/D conversion value															
	n + 16	Input 16 A/D conversion value															
	n + 17	Not used.															
	n + 18	Disconnection detection															
		Input 16	Input 15	Input 14	Input 13	Input 12	Input 11	Input 10	Input 9	Input 8	Input 7	Input 6	Input 5	Input 4	Input 3	Input 2	Input 1
	n + 19	Alarm flags									Not used.						

Note For the CIO word addresses, n = CIO 2000 + unit number x 10.

Set Values and Stored Values

Item	Contents	Page
Peak value hold function	0: Not used. 1: Peak value hold used.	62
Conversion value (calculation result)	4-digit hexadecimal	57
Disconnection detection	0: No disconnection 1: Disconnection	63
Alarm Flags	• CS1W-AD041-VI and CS1W-AD081-V1: CIO n+9 Bit 11: Mean value processing setting error Bit 15: Operating in adjustment mode (always OFF in normal mode) • CS1W-AD161: CIO n+19 Bit 08: Scaling data setting error Bit 11: Mean value processing setting error Bit 12: Conversion time/resolution or operation mode setting error Bit 15: Operating in adjustment mode (always OFF in normal mode)	75

The input disconnection detection function can be used when the input signal range is set for 1 to 5 V (4 to 20 mA).

Input signal range	Voltage/current
1 to 5 V	0.3 V max.
4 to 20 mA	1.2 mA max.

Allocation for Adjustment Mode

For adjustment mode, turn ON the operation mode switch on the rear panel of the Unit as shown in the following diagram, or set bits 00 to 07 in DM word m+18 (m+19 for CS1W-AD161) to C1. When the Unit is set for adjustment mode, the ADJ indicator on the front panel of the Unit will flash.

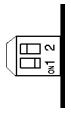

The allocation of CIO words and bits is shown in the following table.

CS1W-AD041-V1/AD081-V1

I/O	Word	Bits															
		15	14	13	12	11	10	9	8	7	6	5	4	3	2	1	0
Output (CPU to Unit)	n	Not used.								Inputs to be adjusted							
										2 (fixed)				1 to 8 (1 to 4) (See note 1.)			
	n + 1	Not used.								Not used.		Clr	Set	Up	Down	Gain	Off-set
	n + 2	Not used.															
	n + 3	Not used.															
	n + 4	Not used.															
	n + 5	Not used.															
	n + 6	Not used.															
	n + 7	Not used.															
Input (Unit to CPU)	n + 8	Conversion value at time of adjustment															
		16^3				16^2				16^1				16^0			
	n + 9	Alarm Flags								Disconnection detection (See note 2.)				Not used.			
										Input 8	Input 7	Input 6	Input 5	Input 4	Input 3	Input 2	Input 1

Note 1. Use settings 1 to 4 for the CS1W-AD041-V1.

2. With the CS1W-AD041-V1, bits 04 to 07 in word n+9 (disconnection detection) are not used.

CS1W-AD161

I/O	Word	Bits															
		15	14	13	12	11	10	9	8	7	6	5	4	3	2	1	0
Output (CPU to Unit)	n	Not used.				Inputs to be adjusted (See note 2.)											
	n + 1	Not used.										Clr	Set	---	---	Gain	Off-set
	n + 2 to n+16	Not used.															
Input (Unit to CPU)	n + 17	Conversion value at time of adjustment															
		16^3				16^2				16^1				16^0			
	n + 18	Disconnection detection															
		Input 16	Input 15	Input 14	Input 13	Input 12	Input 11	Input 10	Input 9	Input 8	Input 7	Input 6	Input 5	Input 4	Input 3	Input 2	Input 1
	n + 19	Alarm Flags								Not used.							

Note 1. For the CIO word addresses, n = CIO 2000 + unit number × 10.

2. The input format used for adjustment is as follows:

Bit	11	10	09	08	07	06	05	04	03	02	01	00
	0	0	1	0	10^1				10^0			
	Always 2 hex				Number of input for adjustment: 1 to 16 (BCD)							

Set Values and Stored Values

Refer to *2-7-1 Adjustment Mode Operational Flow* for further details.

Item	Contents
Input to be adjusted	Sets input to be adjusted. Leftmost digit: 2 (fixed) Rightmost digit: 1 to 8 (1 to 4 for CS1W-AD041-V1)
Offset (Offset Bit)	When ON, adjusts offset error.
Gain (Gain Bit)	When ON, adjusts gain error.
Down (Down Bit)	Decrements the adjustment value while ON.
Up (Up Bit)	Increments the adjustment value while ON.
Set (Set Bit)	Sets adjusted value and writes to EEPROM.
Clr (Clear Bit)	Clears adjusted value. (Returns to default status)
Conversion value for adjustment	The conversion value for adjustment is stored as 16 bits of binary data.
Disconnection detection	0: No disconnection 1: Disconnection
Alarm Flags	Bit 12: Input value is outside adjustment limits (in adjustment mode) Bit 13: Input number setting error (in adjustment mode) Bit 14: EEPROM write error (in adjustment mode) Bit 15: Operating in adjustment mode (always 1 in adjustment mode)

Note For the CIO word addresses, n = CIO 2000 + (unit number × 10).

The input disconnection detection function can be used when the input signal range is set for 1 to 5 V (4 to 20 mA).

Input signal range	Voltage/current
1 to 5 V	0.3 V max.
4 to 20 mA	1.2 mA max.

2-6 Analog Input Functions and Operating Procedures

2-6-1 Input Settings and Conversion Values

Input Numbers

The Analog Input Unit converts analog inputs specified by input numbers. To specify the analog inputs to be used, turn ON from a Programming Device the D(m) bits in the DM Area shown in the following diagram.

Bit	15	14	13	12	11	10	09	08	07	06	05	04	03	02	01	00
D(m)	Input 16	Input 15	Input 14	Input 13	Input 12	Input 11	Input 10	Input 9	Input 8	Input 7	Input 6	Input 5	Input 4	Input 3	Input 2	Input 1

m = D20000 + unit number x 100

Setting 0: Not used.
1: Used

- CS1W-AD041-V1: Inputs 1 to 4
- CS1W-AD081-V1: Inputs 1 to 8

The analog input sampling interval can be shortened by setting any unused input numbers to 0.

Sampling interval = (1 ms) x (Number of inputs used) (See note.)

Note Use 250 μs instead of 1 ms is set to a conversion time of 250 μs and resolution of 8,000.

The conversion values in words for inputs that have been set to “Not used” will always be “0000.”

For the DM word addresses, m = D20000 + (unit number x 100)

Input Signal Range

Any of four types of input signal range (–10 to 10 V, 0 to 10 V, 1 to 5 V, and 4 to 20 mA) can be selected for each of the inputs.

CS1W-AD041-V1/AD081-V1

To specify the input signal range for each input, set from a Programming Device the D(m + 1) bits in the DM Area as shown in the following diagram.

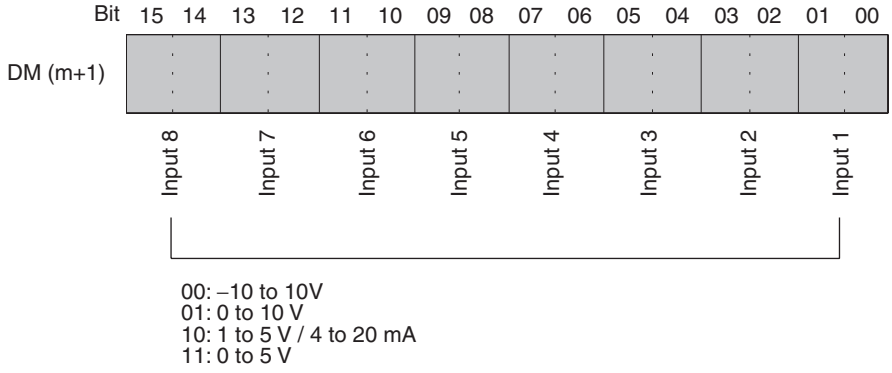

Note There are only four inputs for the CS1W-AD041-V1.

CS1W-AD161

Bit	15	14	13	12	11	10	09	08	07	06	05	04	03	02	01	00
D (m+1)	Input 8		Input 6		Input 6		Input 5		Input 4		Input 3		Input 2		Input 1	
D (m+2)	Input 16		Input 15		Input 14		Input 13		Input 12		Input 11		Input 10		Input 9	

m = D20000 + unit number x 100

00: –10 to +10 V
01: 0 to 10 V
10: 1 to 5 V/4 to 20 mA (See note 2.)
11: 0 to 10 V

Select the input signal range 1 to 5 V/4 to 20 mA by wiring the connector or terminal block conversion connector. The voltage/current input setting can also be set using DM word m+52.

Bit	15	14	13	12	11	10	09	08	07	06	05	04	03	02	01	00
D (m+52)	Input 16	Input 15	Input 14	Input 13	Input 12	Input 11	Input 10	Input 9	Input 8	Input 7	Input 6	Input 5	Input 4	Input 3	Input 2	Input 1

m = D20000 + unit number x 100

0: 1 to 5 V
1: 4 to 20 mA

Note
1. For the DM word addresses, m = D20000 + (unit number × 100)
2. The input signal range of “1 to 5 V” or “4 to 20 mA” is switched using the voltage/current switch.
3. When DM Area settings have been carried out using a Programming Device, be sure to either cycle the power supply to the PLC, or turn ON the Special I/O Unit Restart Bit. The contents of the initial settings in the DM Area will be transferred to the Special I/O Unit when the power is turned ON or the Special I/O Unit Restart Bit is turned ON.

Reading Conversion Values

Analog input conversion values are read in 4-digit hexadecimal for each input.

Address	CS1W-AD161	CS1W-AD081-V1	CS1W-AD041-V1
n+1	Input 1 conversion value	Input 1 conversion value	Input 1 conversion value
n+2	Input 2 conversion value	Input 2 conversion value	Input 2 conversion value
n+3	Input 3 conversion value	Input 3 conversion value	Input 3 conversion value
n+4	Input 4 conversion value	Input 4 conversion value	Input 4 conversion value
n+5	Input 5 conversion value	Input 5 conversion value	Cannot be used.
n+6	Input 6 conversion value	Input 6 conversion value	
n+7	Input 7 conversion value	Input 7 conversion value	
n+8	Input 8 conversion value	Input 8 conversion value	
n+9	Input 9 conversion value	Cannot be used.	
n+10	Input 0 conversion value		
n+11	Input 1 conversion value		
n+12	Input 12 conversion value		
n+13	Input 13 conversion value		
n+14	Input 14 conversion value		
n+15	Input 15 conversion value		
n+16	Input 16 conversion value		

Note For the CIO word addresses, n = CIO 2000 + (unit number × 10).

Use MOV(021) or XFER(070) to read conversion values in the user program.

Example 1

In this example, the conversion data from only one input is read. (The unit number is 0.)

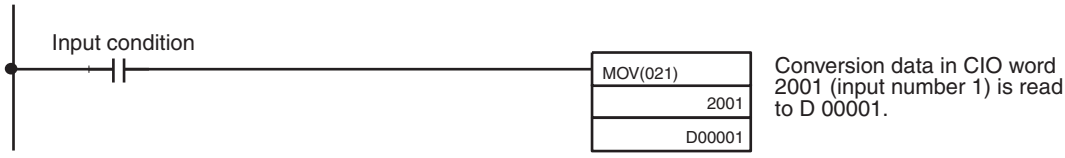

Example 2

In this example, the conversion data from multiple inputs is read. (The unit number is 0.)

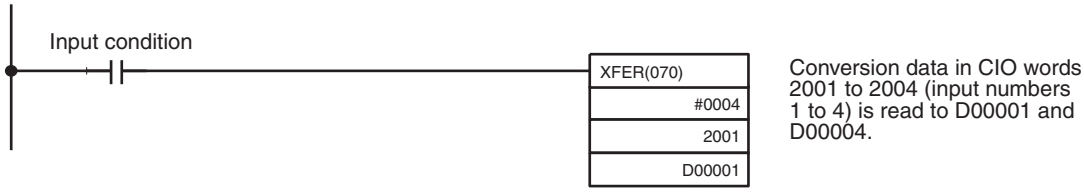

For details regarding conversion value scaling, refer to *Scaling* on page 448.

2-6-2 Conversion Time/Resolution Setting

The default setting is a conversion cycle of 1 ms and resolution of 4,000. For even higher speed and precision, change the settings in bits 08 to 15.

CS1W-AD041-V1/AD081-V1

Bit	15	14	13	12	11	10	9	8	7	6	5	4	3	2	1	0
D (m+18)	Conversion time/resolution setting 00: Conversion time of 1 ms and resolution of 4,000 C1: Conversion time of 250 μs and resolution of 8,000								Operation mode setting 00: Normal mode C1: Adjustment mode							

m = D20000 + unit number x 100

CS1W-AD161

Bit	15	14	13	12	11	10	9	8	7	6	5	4	3	2	1	0
D (m+19)	Conversion time/resolution setting 00: Conversion time of 1 ms and resolution of 4,000 C1: Conversion time of 250 μs and resolution of 8,000								Operation mode setting 00: Normal mode C1: Adjustment mode							

m = D20000 + unit number × 100

Note When DM Area settings have been carried out using a Programming Device, be sure to either cycle the power supply to the PLC, or turn ON the Special I/O Unit Restart Bit. The contents of the initial settings in the DM Area will be transferred to the Special I/O Unit when the power is turned ON or the Special I/O Unit Restart Bit is turned ON.

2-6-3 Mean Value Processing

The Analog Input Unit can compute the mean value of the conversion values of analog inputs that have been previously sampled. Mean value processing involves an operational mean value in the history buffers, so it has no effect on the data refresh cycle. (The number of history buffers that can be set to use mean value processing is 2, 4, 8, 16, 32, or 64.)

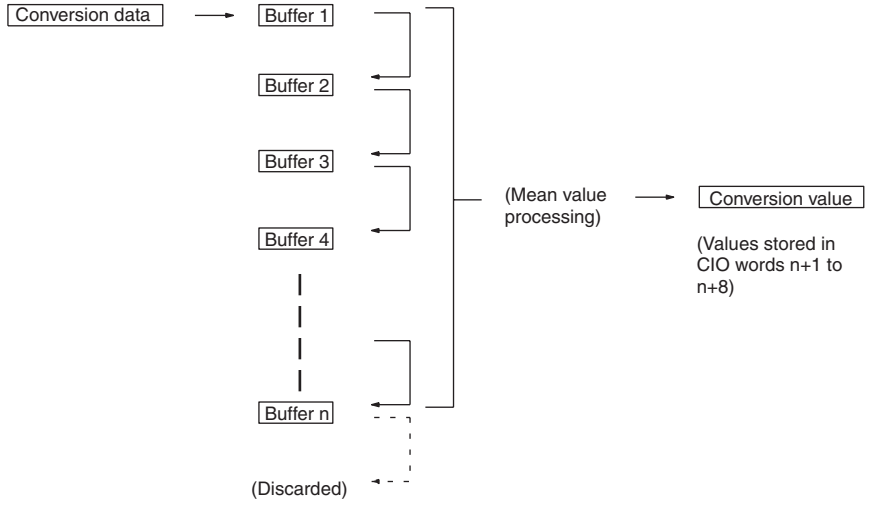

When “n” number of history buffers are being used, the first conversion data will be stored for all “n” number of history buffers immediately data conversion has begun or after a disconnection is restored.

When mean value processing is used together with the peak value hold function, the mean value will be held.

Specify whether or not to use mean value processing and the number of history buffers to be used for mean value processing.

Address	CS1W-AD161	CS1W-AD081-V1	CS1W-AD041-V1	Set value
D (m+2)	---	Input 1	Input 1	0000: Mean value processing with 2 buffers 0001: No mean value processing 0002: Mean value processing with 4 buffers 0003: Mean value processing with 8 buffers 0004: Mean value processing with 16 buffers 0005: Mean value processing with 32 buffers 0006: Mean value processing with 64 buffers
D (m+3)	Input 1	Input 2	Input 2	
D (m+4)	Input 2	Input 3	Input 3	
D(m+5)	Input 3	Input 4	Input 4	
D (m+6)	Input 4	Input 5	Cannot be used.	
D (m+7)	Input 5	Input 6		
D (m+8)	Input 6	Input 7		
D (m+9)	Input 7	Input 8		
D (m+10)	Input 8	Cannot be used.		
D (m+11)	Input 9			
D (m+12)	Input 10			
D (m+13)	Input 11			
D (m+14)	Input 12			
D (m+15)	Input 13			
D (m+16)	Input 14			
D (m+17)	Input 15			
D (m+18)	Input 16			

For the DM word addresses, m = D2000 + (unit number × 100)

Note When DM Area settings have been carried out using a Programming Device, be sure to either cycle the power supply to the PLC, or turn ON the Special

I/O Unit Restart Bit. The contents of the initial settings in the DM Area will be transferred to the Special I/O Unit when the power is turned ON or the Special I/O Unit Restart Bit is turned ON.

The history buffer moving average is calculated as shown below. (In this example, there are four buffers.)

1,2,3...

1. With the first cycle, data 1 is stored in all the history buffers.

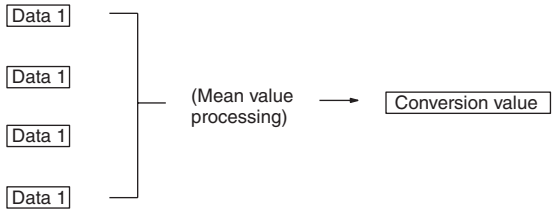

Mean value = (Data 1 + Data 1 + Data 1 + Data 1) ÷ 4

2. With the second cycle, data 2 is stored in the first history buffer.

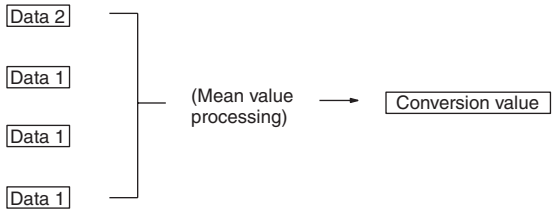

Mean value = (Data 2 + Data 1 + Data 1 + Data 1) ÷ 4

3. With the third cycle, data 3 is stored in the first history buffer.

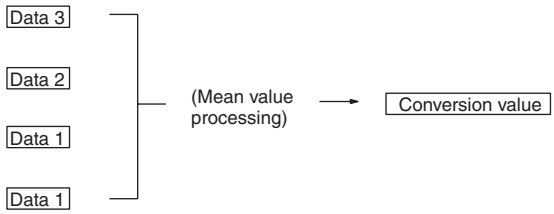

Mean value = (Data 3 + Data 2 + Data 1 + Data 1) ÷ 4

4. With the fourth cycle, data 4 is stored in the first history buffer.

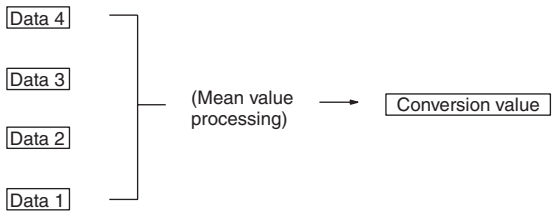

Mean value = (Data 4 + Data 3 + Data 2 + Data 1) ÷ 4

5. With the fifth cycle, data 5 is stored in the first history buffer.

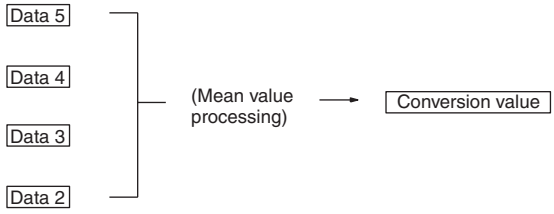

Mean value = (Data 5 + Data 4 + Data 3 + Data 2) ÷ 4

When a disconnection is restored, the mean value processing function begins again from step 1.

Note

1. The default setting for mean value processing in the Analog Input Unit is mean value processing with 2 buffers. The response time for the default setting is different from when there is no mean processing, as shown in the following diagram.
2. Specify "no mean value processing" to follow conversion of a rapid change in input signals.
3. If the averaging function is used, the delay in the conversion data in comparison to changes in the input signals will be as shown below.

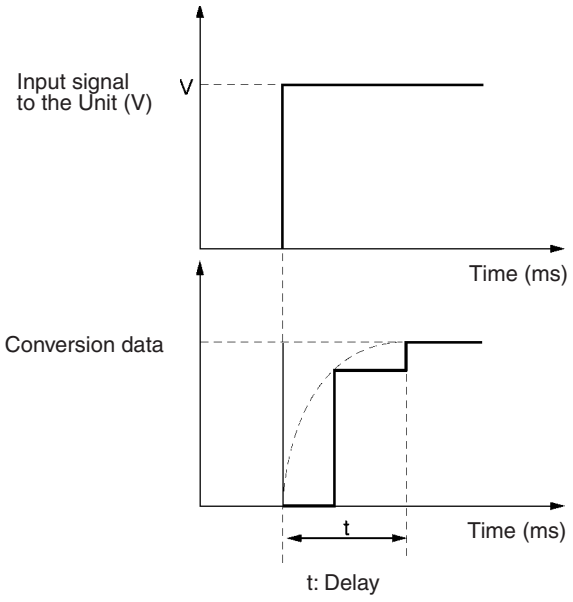

For V = 20 V (–10 to 10 V)

1-ms Conversion Time/4,000 Resolution

Using One Word

t = n + (2 to 3)

Using m Words (1 ≤ m ≤ 16)

No averaging (n = 1) or two averaging buffers (n = 2):
t = n x (m + 2)

n averaging buffers (4 ≤ n ≤ 64):
t = (n – 2) x m + 10.5

250-μs Conversion Time/8,000 Resolution (For version-1 Unit)

Using One Word

t = n + (2 to 3) x 1/4

Using m Words (1 ≤ m ≤ 16)

No averaging (n = 1) or two averaging buffers (n = 2):
t = n x (m + 2) x 1/4

n averaging buffers (4 ≤ n ≤ 64):
t = {(n – 2) x m + 10.5} x 1/4

Response Time at 1-ms Conversion Time/4,000 Resolution

Unit: ms

M	N						
	64	32	16	8	4	2	1
16	1002.5	490.5	234.5	106.5	42.5	36	18
15	940.5	460.5	220.5	100.5	40.5	34	17
14	878.5	430.5	206.5	94.5	38.5	32	16
13	816.5	400.5	192.5	88.5	36.5	30	15
12	754.5	370.5	178.5	82.5	34.5	28	14
11	692.5	340.5	164.5	76.5	32.5	26	13
10	630.5	310.5	150.5	70.5	30.5	24	12
9	568.5	280.5	136.5	64.5	28.5	22	11
8	506.5	250.5	122.5	58.5	26.5	20	10
7	444.5	220.5	108.5	52.5	24.5	18	9
6	382.5	190.5	94.5	46.5	22.5	16	8
5	320.5	160.5	80.5	40.5	20.5	14	7
4	258.5	130.5	66.5	34.5	18.5	12	6
3	196.5	100.5	52.5	28.5	16.5	10	5
2	134.5	70.5	38.5	22.5	14.5	8	4
1	67	35	19	11	7	5	3

Response Time at 250-μs Conversion Time/8,000 Resolution

Unit: ms

M	N						
	64	32	16	8	4	2	1
16	250.625	122.625	58.625	26.625	10.625	9	4.5
15	235.125	115.125	55.125	25.125	10.125	8.5	4.25
14	219.625	107.625	51.625	23.625	9.625	8	4
13	204.125	100.125	48.125	22.125	9.125	7.5	3.75
12	188.625	92.625	44.625	20.625	8.625	7	3.5
11	173.125	85.125	41.125	19.125	8.125	6.5	3.25
10	157.625	77.625	37.625	17.625	7.625	6	3
9	142.125	70.125	34.125	16.125	7.125	5.5	2.75
8	126.625	62.625	30.625	14.625	6.625	5	2.5
7	111.125	55.125	27.125	13.125	6.125	4.5	2.25
6	95.625	47.625	23.625	11.625	5.625	4	2
5	80.125	40.125	20.125	10.125	5.125	3.5	1.75
4	64.625	32.625	16.625	8.625	4.625	3	1.5
3	49.125	25.125	13.125	7.125	4.125	2.5	1.25
2	33.625	17.625	9.625	5.625	3.625	2	1
1	16.75	8.75	4.75	2.75	1.75	1.25	0.75

Symbols

M: Number of input words used in DM Area
N: Average number of buffers set for the input number for which to find the response time

Calculation Example

The following example calculations are for a resolution of 8,000 with an application using inputs 1 and 8, 64 averaging buffers set for input 1, and no averaging set for input 8.

- Response time for input 1: $t = \{(64 - 2) \times 2 + 10.5\} \times 1/4 = 34$ (ms)
- Response time for input 1: $t = 1 \times (2 + 2) \times 1/4 = 1$ (ms)

2-6-4 Peak Value Hold Function

The peak value hold function holds the maximum digital conversion value for every input (including mean value processing). This function can be used with analog input. The following diagram shows how digital conversion values are affected when the peak value hold function is used.

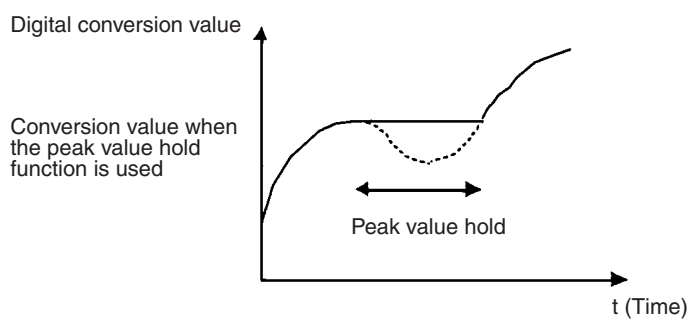

The peak value hold function can be set separately for each input number by turning ON the respective bits (00 to 07 for CS1W-AD081-V1, 00 to 03 for CS1W-AD041-V1) in CIO word n.

Bit	15	14	13	12	11	10	09	08	07	06	05	04	03	02	01	00
Word n	Input 16	Input 15	Input 14	Input 13	Input 12	Input 11	Input 10	Input 9	Input 8	Input 7	Input 6	Input 5	Input 4	Input 3	Input 2	Input 1

n = D20000 + unit number x 10

Setting 0: Not used (the conversion value is reset when the bit turns OFF)
1: Peak value hold function is used (held while ON)

- CS1W-AD041-V1: Inputs 1 to 4
- CS1W-AD081-V1: Inputs 1 to 8

For the CIO word addresses, n = CIO 2000 + (unit number × 10).

In the following example, the peak value hold function is in effect for input number 1, and the unit number is 0.

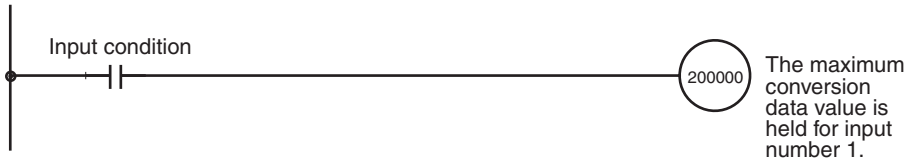

When mean value processing is used together with the peak value hold function, the mean value will be held.

As long as the peak value hold function is in effect, the peak value hold will be held even in the event of a disconnection.

When the load to the CPU Unit is disconnected, the Peak Value Hold Bits.

2-6-5 Input Disconnection Detection Function

When an input signal range of 1 to 5 V (4 to 20 mA) is used, input circuit disconnections can be detected. The detection conditions for each of the input signal ranges are shown in the following table. (see note)

Range	Current/voltage
1 to 5 V	Less than 0.3 V
4 to 20 mA	Less than 1.2 mA

Note The current/voltage level will fluctuate according to the offset/gain adjustment.

The following bits turn ON when a disconnection is detected in each input. When the connection is recovered, these bits turn OFF. Be sure to specify these bits in the execution condition of the ladder program when using the disconnection detection function in the user program.

CS1W-AD041-V1/AD081-V1

Bit	15	14	13	12	11	10	09	08	07	06	05	04	03	02	01	00
Word n+9	Not used.								Input 8	Input 7	Input 6	Input 5	Input 4	Input 3	Input 2	Input 1

n = 2000 + unit number x 10

CS1W-AD041-V1: Inputs 1 to 4

CS1W-AD161

Bit	15	14	13	12	11	10	09	08	07	06	05	04	03	02	01	00
Word n+18	Input 16	Input 15	Input 14	Input 13	Input 12	Input 11	Input 10	Input 9	Input 8	Input 7	Input 6	Input 5	Input 4	Input 3	Input 2	Input 1

n = 2000 + unit number x 10

For the CIO word addresses, n = CIO 2000 + (unit number × 10).

The conversion value during a disconnection will be 0000.

In the following example, the conversion value is read only if there is no disconnection at analog input number 1. (The unit number is 0.)

The conversion value in CIO word 2001 (input number 1) is read to D00001.

2-6-6 Scaling Function (CS1W-AD161 Only)

With the CS1W-AD161, the scaling function can be used to convert data into engineering units after A/D conversion. The scaling function can only be used when the resolution is set to 4,000. Scaling is not supported for resolutions of 8,000.

Overview

When using a resolution of 4,000, A/D conversion data in the ranges 1 to 5 V, 0 to 5 V, 0 to 10 V, or 4 to 20 mA will be scaled to values between 0 and 4,000 (decimal), approximately. A/D conversion data in the range −10 to +10 V will be scaled to values between −2,000 and +2,000 (decimal), approximately. (Actual D/A conversion is executed up to −5% to +105% of full scale.)

The lower limit and upper limit can be set to between −32,000 and +32,000 (decimal). Actual settings in DM word m+20 to DM word m+51 are set in 4-digit hexadecimal. (In the above example, the lower limit is 0000 and the upper limit is 03E8 hexadecimal.)

- Besides upper limit and lower limit. (Reverse scaling is supported.)
- Negative values are set as two's complement
- Scaling is not performed when the upper limit and lower limit are both set to 0000 (default setting).

2-7 Adjusting Offset and Gain

2-7-1 Adjustment Mode Operational Flow

The adjustment mode enables the input of the connected devices to be calibrated.

The offset voltage (or current) and gain voltage (or current) at the output device are entered as analog input conversion data 0000 and 0FA0 (07D0 if the range is ±10 V) respectively for a resolution of 4,000.

For example, when using in the range 1 to 5 V, the actual output may be in the range 0.8 to 4.8 V, even though the specifications range for the external device is 1 to 5 V. In this case, when an offset voltage of 0.8 V is output at the external device, the conversion data at the Analog Input Unit for a resolution of 4,000 will be FF38, and if a gain voltage of 4.8 V is output, the conversion data will be 0EDA. The offset/gain adjustment function will, for this example, convert 0.8 V and 4.8 V to 0000 and 0FA0 respectively and not to FF38 and 0EDA, as illustrated in the following table.

Offset/gain voltage at the output device	Conversion data before adjustment	Conversion data after adjustment
0.8 V	FF38 (FE70)	0000 (0000)
4.8 V	0EDA (0DB4)	0FA0 (1F40)

(Values in parentheses are for a resolution of 8,000.)

The following diagram shows the flow of operations when using the adjustment mode for adjusting offset and gain.

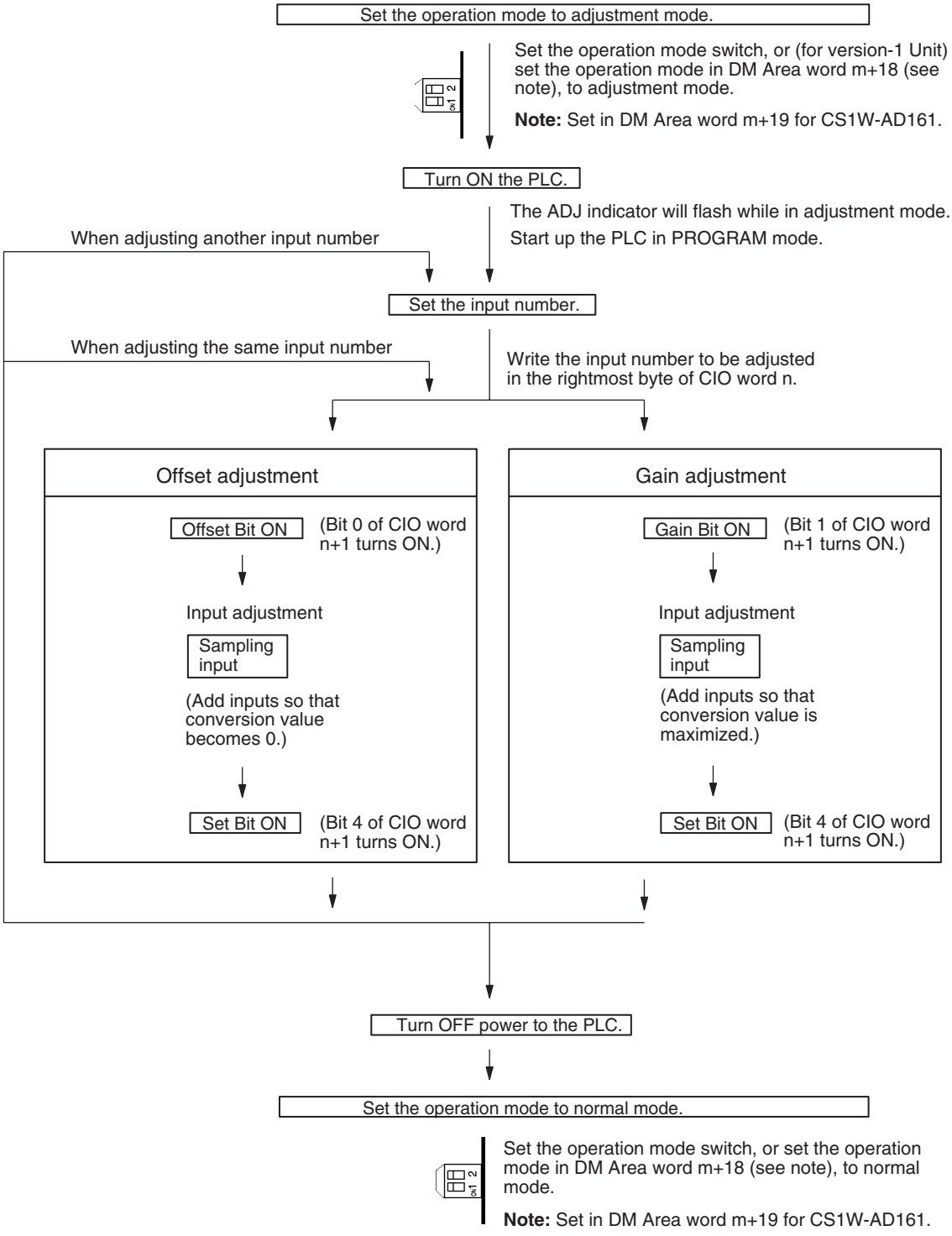

⚠ **Caution** Be sure to turn OFF the power to the PLC before changing the setting of the operation mode switch.

⚠ **Caution** The power must be cycled or the Unit restarted if the operation mode is set in DM.

⚠ **Caution** Set the PLC to PROGRAM mode when using the Analog Input Unit in adjustment mode. If the PLC is in MONITOR mode or RUN mode, the Analog Input Unit will stop operating, and the input values that existed immediately before this stoppage will be retained.

⚠ **Caution** Always perform adjustments in conjunction with offset and gain adjustments.

Note Input adjustments can be performed more accurately in conjunction with mean value processing.

2-7-2 Input Offset and Gain Adjustment Procedures

Specifying Input Number to be Adjusted

The following bits turn ON when a disconnection is detected in each input. When the connection is recovered, these bits turn OFF. Be sure to specify these bits in the execution condition of the ladder program when using the disconnection detection function in the user program.

CS1W-AD041-V1-AD081-V1

Bit	15	14	13	12	11	10	09	08	07	06	05	04	03	02	01	00
Word n	Not used.								0	0	1	0	Input numbers to be adjusted 1 to 8 (See note.)			

n = CIO 2000 + unit number x 10

2: Input (fixed)

Note Use inputs 1 to 4 for the CS1W-AD041-V1.

CS1W-AD161

Bit	15	14	13	12	11	10	09	08	07	06	05	04	03	02	01	00
Word n	Not used.				0	0	1	0	Input numbers to be adjusted 1 to 16 (See note.)							

n = CIO 2000 + unit number x 10

2: Input (fixed)

For the CIO word addresses, n = CIO 2000 + (unit number × 10).

The following example shows an adjustment for input number 1 using a CS1W-AD041-V1/081-V1 for illustration. (The unit number is 0.)

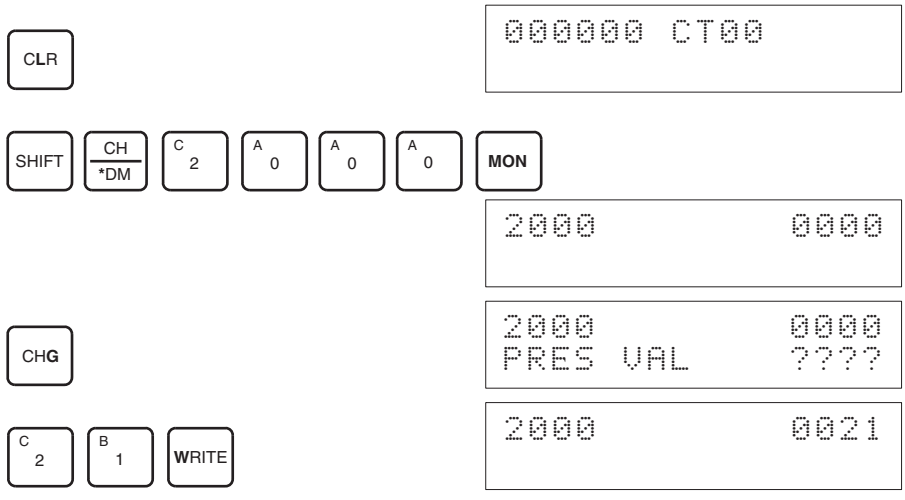

Bits Used for Adjusting Offset and Gain

The CIO word (n+1) bits shown in the following diagram are used for adjusting offset and gain.

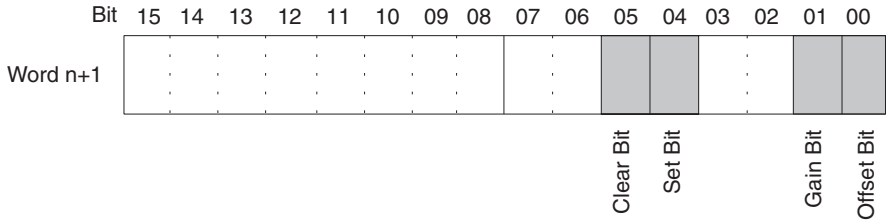

Offset Adjustment

The procedure for adjusting the analog input offset is explained below. As shown in the following diagram, the offset is adjusted by sampling inputs so that the conversion value becomes 0.

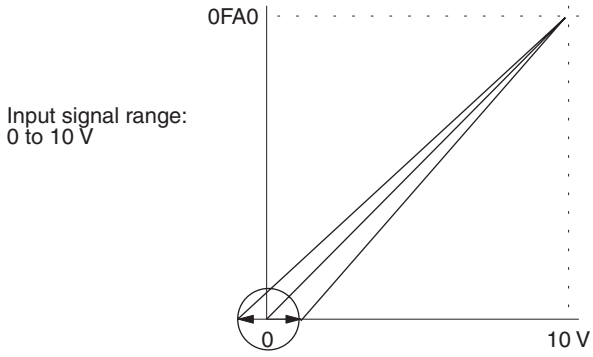

Offset adjustment input range

The following example uses input number 1 adjustment for illustration. (The unit number is 0.)

1,2,3...

1. Turn ON bit 00 (the Offset Bit) of CIO word n+1. (Hold the ON status.)

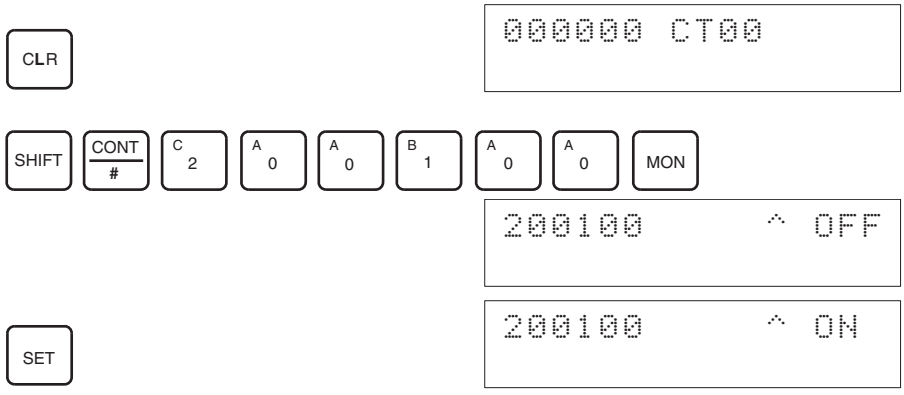

For CS1W-AD041-V1 and CS1W-AD081-V1, the analog input's digital conversion values while the Offset Bit is ON will be monitored in CIO word n+8. For CS1W-AD161, the values will be monitored in CIO word n+17.

2. Check whether the input devices are connected.

Wiring for Voltage Input

CS1W-AD041-V1/081-V1

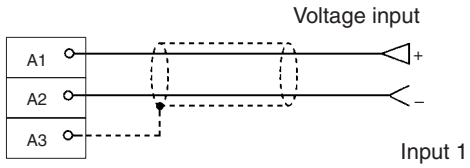

CS1W-AD161

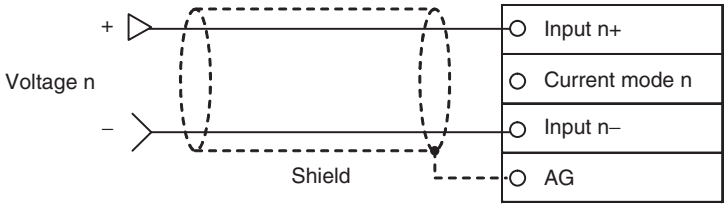

Wiring for Current Input

When using current input, short-circuit the input (+) terminal and the current mode terminal.

CS1W-AD041-V1/081-V1

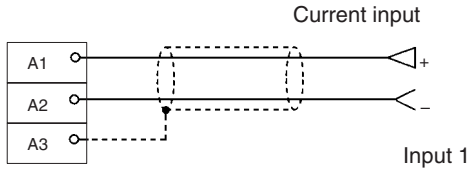

For current input, check that the voltage/ current switch is ON.

CS1W-AD161

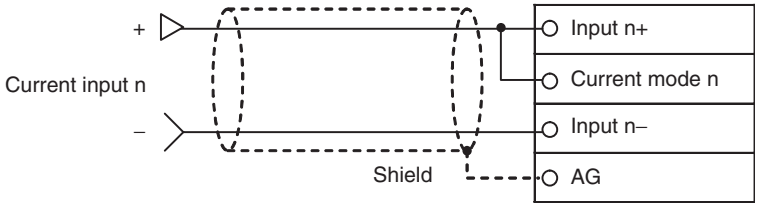

3. Input the voltage or current so that the conversion value becomes 0000. The following table shows the offset adjustment voltages and currents to be input according to the input signal range.

Input signal range	Input range	Word (n+8) monitoring value
0 to 10 V	–0.5 to 0.5 V	FF38 to 00C8 (4,000 resolution) FE70 to 0190 (8,000 resolution)
–10 to 10 V	–1.0 to 1.0 V	
1 to 5 V	0.8 to 1.2 V	
0 to 5 V	–0.25 to 0.25 V	
4 to 20 mA	3.2 to 4.8 mA	

4. After inputting the voltage or current so that the conversion value for the analog input terminal is 0000, turn ON bit 04 (the Set Bit) of CIO word n+1, and then turn it OFF again.

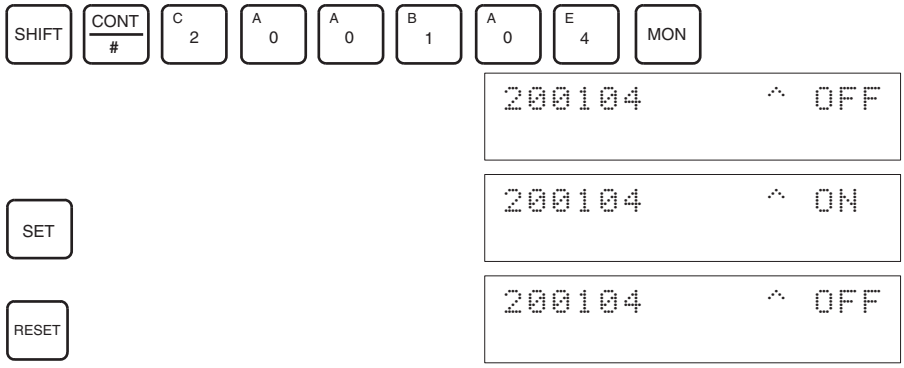

While the Offset Bit is ON, the offset value will be saved to the Unit's EEPROM when the Set Bit turns ON.

5. To finish the offset adjustment, turn OFF bit 00 (the Offset Bit) of CIO word n+1.

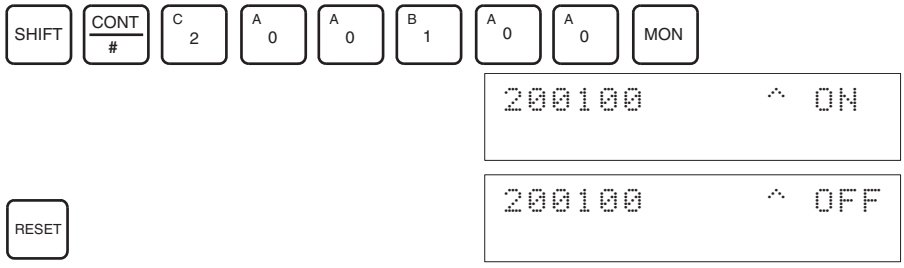

⚠ **Caution** Do not turn OFF the power supply or restart the Unit while the Set Bit is ON (data is being written to the EEPROM). Otherwise, illegal data may be written in the Unit's EEPROM and "EEPROM Errors" may occur when the power supply is turned ON or when the Unit is restarted, causing a malfunction.

⚠ **Caution** When making adjustments, be sure to perform both the offset adjustment and gain adjustment at the same time.

Note

1. The EEPROM can be overwritten 50,000 times.
2. While the Offset Bit or the Gain Bit is ON, the present conversion data will be displayed in word n+8.
   If the Offset Bit or the Gain Bit is OFF, the value immediately prior to turning the bit OFF will be held.

Gain Adjustment

The procedure for adjusting the analog input gain is explained below. As shown in the following diagram, the gain is adjusted by sampling inputs so that the conversion value is maximized.

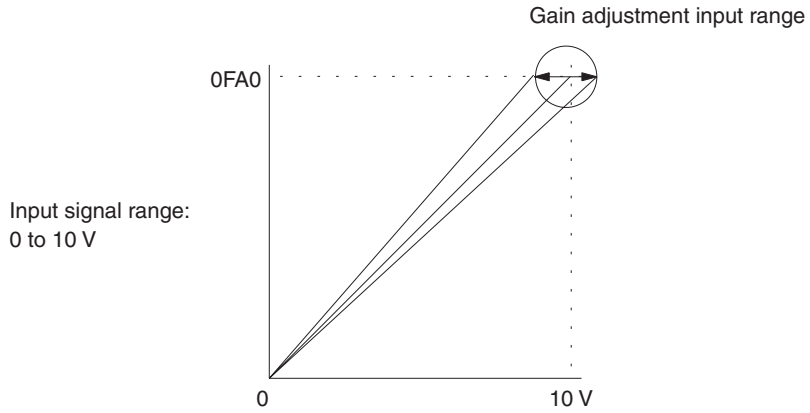

The following example uses input number 1 adjustment for illustration. (The unit number is 0.)

1,2,3... 1. Turn ON bit 01 (the Gain Bit) of CIO word n+1. (Hold the ON status.)

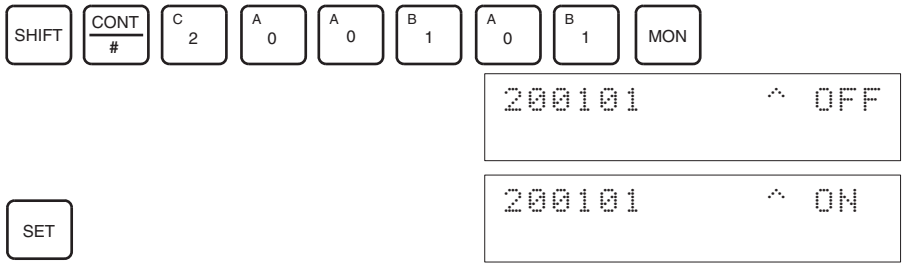

For CS1W-AD041-V1 and CS1W-AD081-V1, the analog input's digital conversion values while the Gain Bit is ON will be monitored in CIO word n+8. For CS1W-AD161, the values will be monitored in CIO word n+17.

2. Check whether the input devices are connected.

Wiring for Voltage Input

CS1W-AD041-V1/081-V1

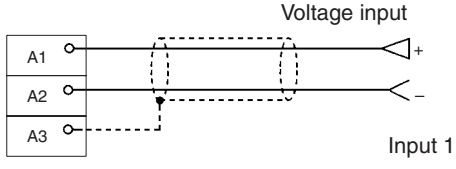

CS1W-AD161

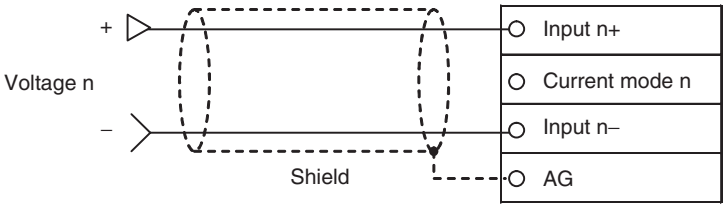

Wiring for Current Input

When using current input, short-circuit the input (+) terminal and the current mode terminal.

CS1W-AD041-V1/081-V1

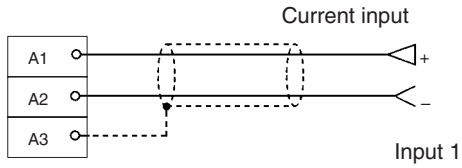

For current input, check that the voltage/ current switch is ON.

CS1W-AD161

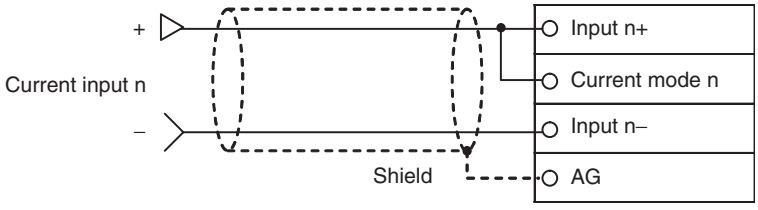

3. Input the voltage or current so that the conversion value is maximized (0FA0 or 07D0 at a resolution of 4,000). The following table shows the gain adjustment voltages and currents to be input according to the input signal range.

Input signal range	Input range	Word (n+8) monitoring value
0 to 10 V	9.5 to 10.5 V	0ED8 to 1068 (0FB0 to 20D0)
–10 to 10 V	9.0 to 11.0 V	0708 to 0898 (0E10 to 1130)
1 to 5 V	4.8 to 5.2 V	0ED8 to 1068 (0FB0 to 20D0)
0 to 5 V	4.75 to 5.25 V	0ED8 to 1068 (0FB0 to 20D0)
4 to 20 mA	19.2 to 20.8 mA	0ED8 to 1068 (0FB0 to 20D0)

(Values in parentheses are for a resolution of 8,000.)

4. With the voltage or current having been input so that the conversion value for the Analog Input Unit is maximized (0FA0 or 07D0), turn bit 04 (the Set Bit) of CIO word n+1 ON and then OFF again.

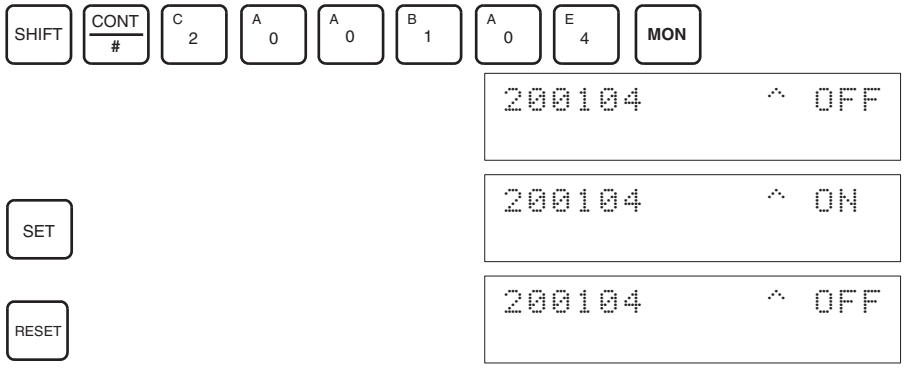

While the Gain Bit is ON, the gain value will be saved to the Unit's EEPROM when the Set Bit turns ON.

5. To finish the gain adjustment, turn OFF bit 01 (the Gain Bit) of CIO word n+1.

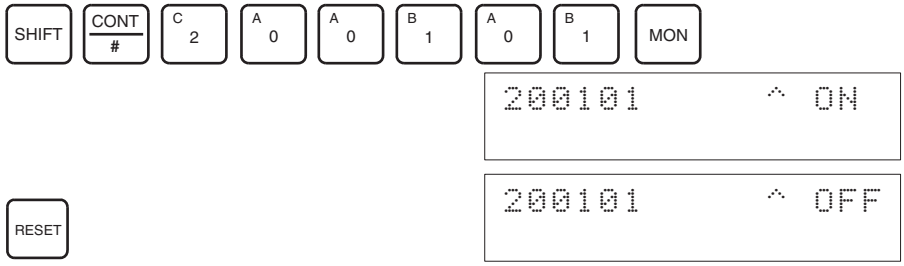

⚠ **Caution** Do not turn OFF the power supply or restart the Unit while the Set Bit is ON (data is being written to the EEPROM). Otherwise, illegal data may be written in the Unit's EEPROM and "EEPROM Errors" may occur when the power supply is turned ON or when the Unit is restarted, causing a malfunction.

⚠ **Caution** When making adjustments, be sure to perform both the offset adjustment and gain adjustment at the same time.

Note

1. The EEPROM can be overwritten 50,000 times.
2. While the Offset Bit or the Gain Bit is ON, the present conversion data will be displayed in word n+8.
   If the Offset Bit or the Gain Bit is OFF, the value immediately prior to turning the bit OFF will be held.

Clearing Offset and Gain Adjusted Values

Follow the procedure outlined below to return the offset and gain adjusted values to their default settings.

The following example uses adjustment for illustration. (The unit number is 0.)

1,2,3...

1. Turn ON bit 05 (the Clear Bit) of CIO word n+1. (Hold the ON status.) Regardless of the input value, 0000 will be monitored in CIO word n+8.

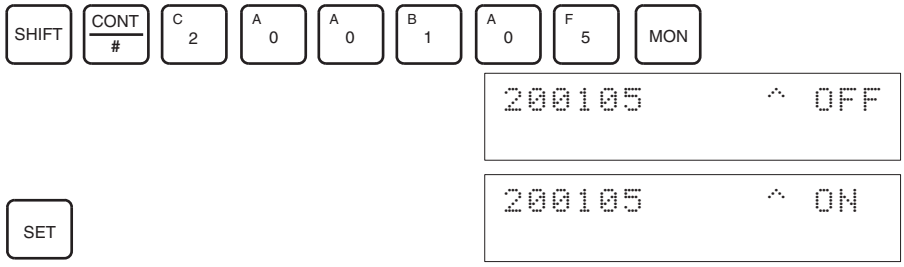

2. Turn bit 04 of CIO word n+1 ON and then OFF again.

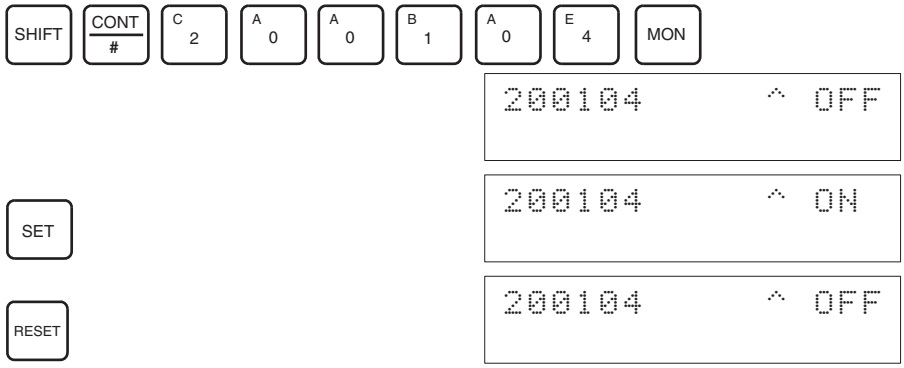

While the Clear Bit is ON, the adjusted value will be cleared and reset to the default offset and gain values when the Set Bit turns ON.

3. To finish the clearing of adjusted values, turn OFF bit 05 (the Clear Bit) of CIO word n+1.

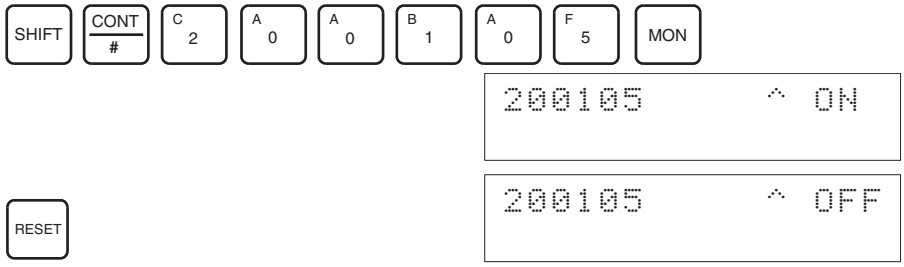

⚠ **Caution** Do not turn OFF the power supply or restart the Unit while the Set Bit is ON (data is being written to the EEPROM). Otherwise, illegal data may be written in the Unit's EEPROM and "EEPROM Errors" may occur when the power supply is turned ON or when the Unit is restarted, causing a malfunction.

⚠ **Caution** When making adjustments, be sure to perform both the offset adjustment and gain adjustment at the same time.

Note The EEPROM can be overwritten 50,000 times.

2-8 Handling Errors and Alarms

2-8-1 Indicators and Error Flowchart

Indicators

If an alarm or error occurs in the Analog Input Unit, the ERC or ERH indicators on the front panel of the Unit will light.

Front panel of Unit

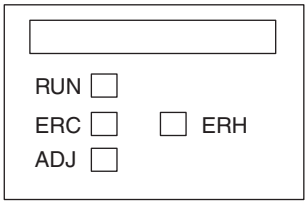

LED	Meaning	Indicator	Operating status
RUN (green)	Operating	Lit	Operating in normal mode.
		Not lit	Unit has stopped exchanging data with the CPU Unit.
ERC (red)	Error detected by Unit	Lit	Alarm has occurred (such as disconnection detection) or initial settings are incorrect.
		Not lit	Operating normally.
ADJ (yellow)	Adjusting	Flashing	Operating in offset/gain adjustment mode.
		Not lit	Other than the above.
ERH (red)	Error in the CPU Unit	Lit	Error has occurred during data exchange with the CPU Unit.
		Not lit	Operating normally.

Troubleshooting Procedure

Use the following procedure for troubleshooting Analog Input Unit errors.

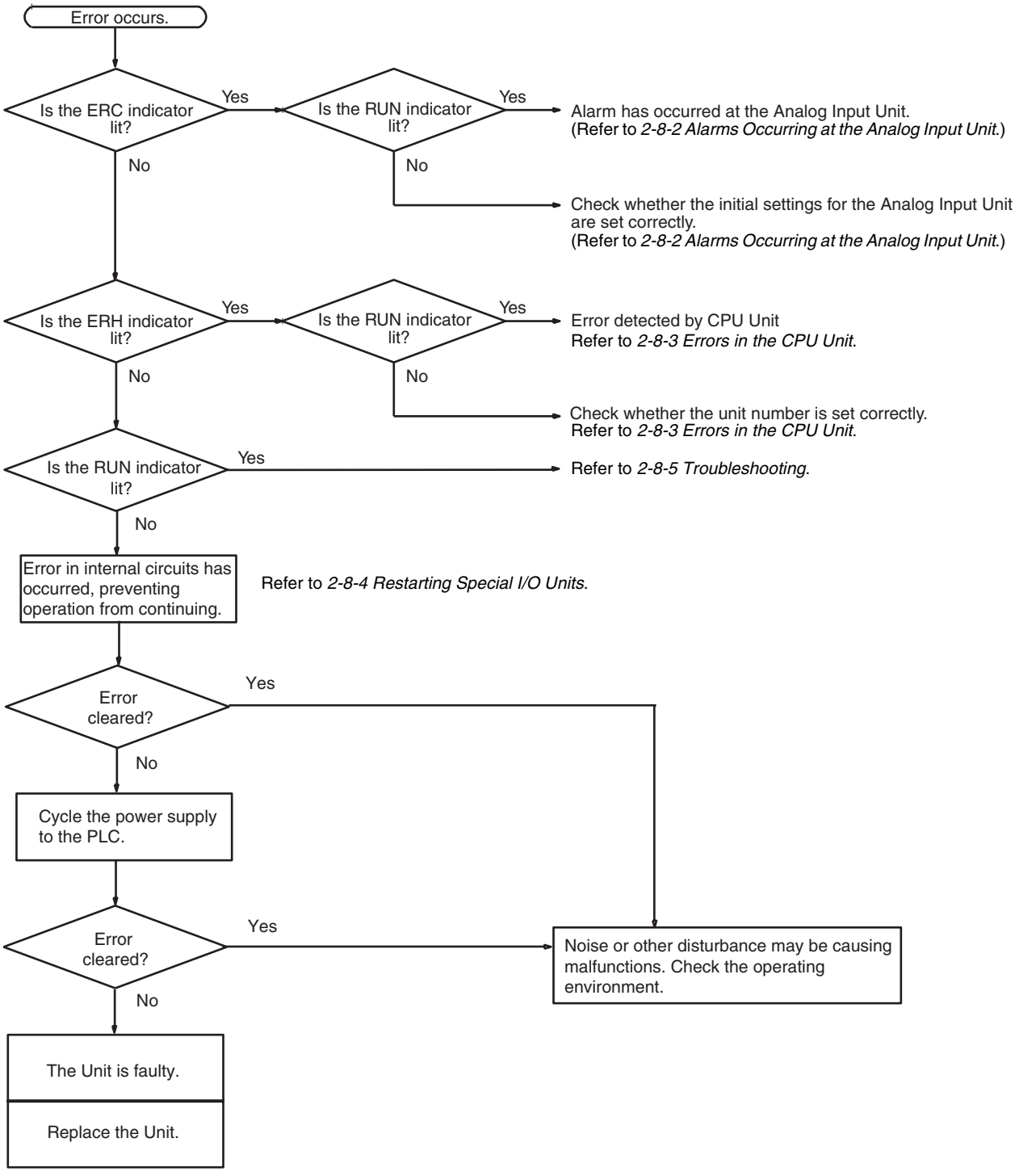

2-8-2 Alarms Occurring at the Analog Input Unit

If an error is detected in the Analog Input Unit, the ERC indicator will light and the corresponding bit will turn ON.

Disconnection Detection Flags operate when the input range is set to 1 to 5 V or 4 to 20 mA.

CS1W-AD041-V1/AD081-V1

Bit	15	14	13	12	11	10	09	08	07	06	05	04	03	02	01	00
Word n+9	Alarm Flags								Disconnection Detection Flags (See note.)							
									Input 8	Input 7	Input 6	Input 5	Input 4	Input 3	Input 2	Input 1

m = D20000 + unit number x 10

Note Use inputs 1 to 4 for the CS1W-AD041-V1.

CS1W-AD161

Bit	15	14	13	12	11	10	09	08	07	06	05	04	03	02	01	00
	Disconnection Detection Flags															
Word n+18	Input 16	Input 15	Input 14	Input 13	Input 12	Input 11	Input 10	Input 9	Input 8	Input 7	Input 6	Input 5	Input 4	Input 3	Input 2	Input 1
Word n+19	Alarm Flags									Not used.						

n = CIO 2000 + unit number x 10

Alarm Flags

Model	CS1W-AD041-V1 CS1W-AD081-V1	CS1W-AD161	Contents
Word	**n+9**	**n+19**	
Bit	15	15	Operating in adjustment mode.
	14	14	EEPROM error occurred during adjustment mode.
	13	13	Input number setting error occurred during adjustment mode.
	12	12	Input adjustment value outside range during adjustment mode.
	11	11	Mean average processing error occurred.
	---	08	Scaling data setting error occurred.

n = CIO 2000 + unit number x 10

ERC and RUN Indicators: Lit

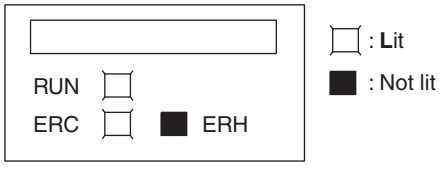

The ERC and RUN indicators will be lit if an error occurs while the Unit is operating normally. The following alarm flags will turn ON in CIO word n+9. These alarm flags will turn OFF automatically when the error is cleared.

Word n+9, n+18, or n+19 (See note 1.)	Alarm flag	Error contents	Input status	Countermeasure
Bits 00 to 07 (See note 2.)	Disconnection Detection	A disconnection was detected. (See note 3.)	Conversion data becomes 0000.	Check the rightmost byte of CIO word n+9. The inputs for bits that are ON may be disconnected. Restore any disconnected inputs.

Word n+9, n+18, or n+19 (See note 1.)	Alarm flag	Error contents	Input status	Countermeasure
Bit 14	(Adjustment mode) EEPROM Writing Error	An EEPROM writing error has occurred while in adjustment mode.	Holds the values immediately prior to the error. No data is changed.	Turn the Set Bit OFF, ON, and OFF again. If the error persists even after the reset, replace the Analog Input Unit.

n = CIO 2000 + unit number x 10

Note
1. These alarms are output in word n+9 for CS1W-AD041-V1 and CS1W-AD081-V1, and in words n+18/n+19 for CS1W-AD161.
2. The CS1W-AD041-V1 uses bits 00 to 08 of word n+9, and the CS1W-AD081-V1 uses bits 00 to 04. The CS1W-AD161 uses bits 00 to 15 of word n+18.
3. The disconnection detection function is enabled for input numbers set within the input ranges 1 to 5 V or 4 to 20 mA.

ERC Indicator and RUN Indicator: Lit, ADJ Indicator: Flashing

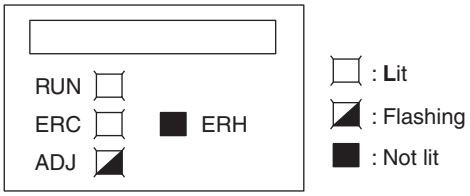

This alarm will occur in the case of incorrect operation while in the adjustment mode. In adjustment mode, the Adjustment Mode ON Flag will turn ON in bit 15 of CIO word n+9.

Word n+9/n+19 (See note 2.)	Alarm flag	Error contents	Input status	Countermeasure
Bit 12	(Adjustment mode) Input Value Adjustment Range Exceeded	In adjustment mode, offset or gain cannot be adjusted because input value is out of the permissible range for adjustment.	Conversion data corresponding to the input signal is monitored in word n+8/n+18 (see note 3).	If making the adjustment by means of a connected input device, first adjust the input device before adjusting the Analog Input Unit.
Bit 13	(Adjustment mode) Input Number Setting Error	In adjustment mode, adjustment cannot be performed because the specified input number is not set for use or because the wrong input number is specified.	Holds the values immediately prior to the error. No data is changed.	• Check whether the word n input number to be adjusted is set within the following ranges: CS1W-AD041-V1: 21 to 24 CS1W-AD801-V1: 21 to 28 CS1W-AD161: 201 to 216 • Check whether the input number to be adjusted is set for use by means of the DM setting (DM word m set to 1).
Bit 15 only ON (See note 5.)	(Adjustment Mode) PLC Error	The PLC is in either MONITOR or RUN mode while the Analog Input Unit is operating in adjustment mode.	Holds the values immediately prior to the error. No data is changed.	Set the Unit to normal mode either by removing the Unit and setting the DIP switch on the rear panel or by setting the mode in DM word m+18 (see note 4), and then restart the Unit.

n = CIO 2000 + unit number x 10

Note
1. When a PLC error occurs in the adjustment mode, the Unit will stop operating. (The input values immediately prior to the error are held.)

2. These alarms are output in CIO word n+9 for CS1W-AD041-V1 and CS1W-AD081-V1, and in CIO word n+19 for CS1W-AD161.
3. These alarms are output in CIO word n+8 for CS1W-AD041-V1 and CS1W-AD081-V1, and in CIO word n+18 for CS1W-AD161.
4. The operation mode is set in DM word m+18 for CS1W-AD041-V1 and CS1W-AD081-V1, and in DM word m+19 for CS1W-AD161.
5. Bit 15 is always ON in adjustment mode. When the PLC is in RUN mode or MONITOR mode, the ERC indicator will be lit.

ERC Indicator: Lit, RUN Indicator: Not Lit

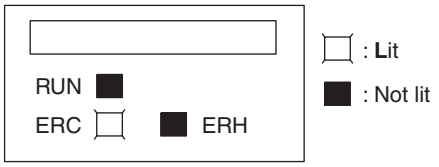

The ERC indicator will be lit when the initial settings for the Analog Input Unit are not set correctly. The following alarm flags will turn ON in CIO word. These alarm flags will turn OFF when the error is cleared and the Unit is restarted, or the Special I/O Unit Restart Bit is turned ON and then OFF again.

Word n+9/n+19 (See note.)	Alarm flag	Error contents	Input status	Countermeasure
Bit 11	Mean Value Processing Setting Error	The wrong number of samplings has been specified for mean processing.	Conversion does not start and data becomes 0000.	Specify a number from 0000 to 0006.
Bit 12	Conversion Time/Operation Mode Setting Error	The setting for conversion time/ resolution is incorrect.	Conversion does not start and data becomes 0000.	Specify 00 or C1.

Note These alarms are output in CIO word n+9 for CS1W-AD041-V1 and CS1W-AD081-V1, and in CIO word n+19 for CS1W-AD161.

2-8-3 Errors in the CPU Unit

The ERH indicator will light if an error occurs in the CPU Unit or I/O bus and I/O refreshing with the Special I/O Units is not performed correctly, preventing the Analog Input Unit from operating.

ERH and RUN Indicators: Lit

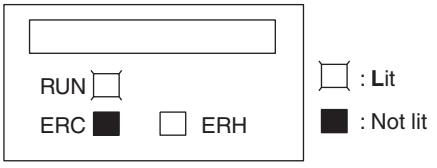

The ERH and RUN indicators will be lit if an error occurs in the I/O bus causing a WDT (watchdog timer) error in the CPU Unit, resulting in incorrect I/O refresh with the Analog Input Unit.

Turn ON the power supply again or restart the system.
For further details, refer to *CS-series CS1G/H-CPU□□-EV1, CS1G/H-CPU□□H Programmable Controllers Operation Manual* (W339).

Error	Error contents	Input status
I/O bus error	Error has occurred during data exchange with the CPU Unit.	Conversion data becomes 0000.

Error	Error contents	Input status
CPU Unit monitoring error (see note)	No response from CPU Unit during fixed period.	Maintains the condition existing before the error.
CPU Unit WDT error	Error has been generated in CPU Unit.	Changes to undefined state.

Note No error will be detected by the CPU Unit or displayed on the Programming Console, because the CPU Unit is continuing operation.

ERH Indicator: Lit, RUN Indicator: Not Lit

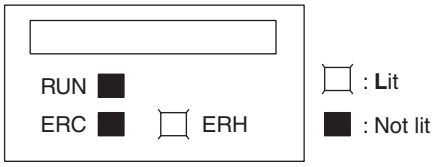

The unit number for the Analog Input Unit has not been set correctly.

Error	Error contents	Input status
Duplicate Unit Number (See note.)	The same unit number has been assigned to more than one Unit or the unit number was set to a value other than 00 to 95.	Conversion does not start and data becomes 0000.
Special I/O Unit Setting Error	The Special I/O Units registered in the I/O table are different from the ones actually mounted.	

Note A single CS1W-AD161 is allocated CIO Area and DM Area words for two Special I/O Units. Be sure to set a unit number so that the CS1W-AD161 is not allocated words in the CIO Area and DM Area that are already allocated to other Special I/O Units. Unit numbers for CS1W-AD161 can be set from 0 to 94.

2-8-4 Restarting Special I/O Units

To restart the Analog Input Unit after changing the contents of the DM Area or correcting an error, cycle the power to the PLC or turn ON the Special I/O Unit Restart Bit.

Special I/O Unit Restart Bits

Bits	Functions	
A50200	Unit #0 Restart Bit	Turning the Restart Bit for any Unit ON and then OFF again restarts that Unit.
A50201	Unit #1 Restart Bit	
to	to	
A50215	Unit #15 Restart Bit	
A50300	Unit #16 Restart Bit	
to	to	
A50715	Unit #95 Restart Bit (See note.)	

The conversion data becomes 0000 during restart.

If the error is not cleared even after turning the Special I/O Unit Restart Bit ON and then OFF again, then replace the Unit.

Note The highest unit number that can be set for a CS1W-AD161 is unit number 94.

2-8-5 Troubleshooting

The following tables explain the probable causes of troubles that may occur, and the countermeasures for dealing with them.

Conversion Data Does Not Change

Probable cause	Countermeasure	Page
The input is not set for being used.	Set the input to be used.	56
The peak value hold function is in operation.	Turn OFF the peak value hold function if it is not required.	62
The input device is not working, the input wiring is wrong, or there is a disconnection.	Using a tester, check to see if the input voltage or current is changing.	---
	Use Unit's alarm flags to check for a disconnection.	74

Value Does Not Change as Intended

Probable cause	Countermeasure	Page
The input device's signal range does not match the input signal range for the relevant input number at the Analog Input Unit.	Check the specifications of the input device, and match the settings for the input signal ranges.	18
The offset and gain are not adjusted.	Adjust the offset and gain.	64
When using the 4 mA to 20 mA range, the voltage/current switch is not turned ON.	Turn ON the voltage/current switch.	35

Conversion Values are Inconsistent

Probable cause	Countermeasure	Page
The input signals are being affected by external noise.	Change the shielded cable connection to the Unit's COM terminal.	39
	Insert a 0.01-μF to 0.1-μF ceramic capacitor or film capacitor between the input's (+) and (–) terminals.	---
	Try increasing the number of mean value processing buffers.	59

SECTION 3
CJ-series Analog Input Units (CJ1W-AD041-V1/081-V1)

This section explains how to use the CJ1W-AD041-V1/081-V1 Analog Input Unit.

3-1 Specifications 82
3-1-1 Specifications 82
3-1-2 Input Function Block Diagram 84
3-1-3 Input Specifications 84
3-2 Operating Procedure 87
3-2-1 Procedure Examples 88
3-3 Components and Switch Settings 93
3-3-1 Indicators 94
3-3-2 Unit Number Switches 94
3-3-3 Operation Mode Switch 95
3-3-4 Voltage/Current Switch 96
3-4 Wiring 97
3-4-1 Terminal Arrangement 97
3-4-2 Internal Circuitry 98
3-4-3 Voltage Input Disconnection 99
3-4-4 Input Wiring Example 100
3-4-5 Input Wiring Considerations 100
3-5 Exchanging Data with the CPU Unit 101
3-5-1 Outline of Data Exchange 101
3-5-2 Unit Number Setting 102
3-5-3 Special I/O Unit Restart Bits 102
3-5-4 Fixed Data Allocations 103
3-5-5 I/O Refresh Data Allocations 105
3-6 Analog Input Functions and Operating Procedures 108
3-6-1 Input Settings and Conversion Values 108
3-6-2 Conversion Time/Resolution Setting 110
3-6-3 Mean Value Processing 111
3-6-4 Peak Value Hold Function 114
3-6-5 Input Disconnection Detection Function 115
3-7 Adjusting Offset and Gain 116
3-7-1 Adjustment Mode Operational Flow 116
3-7-2 Input Offset and Gain Adjustment Procedures 118
3-8 Handling Errors and Alarms 124
3-8-1 Indicators and Error Flowchart 124
3-8-2 Alarms Occurring at the Analog Input Unit 126
3-8-3 Errors in the CPU Unit 128
3-8-4 Restarting Special I/O Units 129
3-8-5 Troubleshooting 129

3-1 Specifications

3-1-1 Specifications

Item			CJ1W-AD041-V1	CJ1W-AD081-V1
Unit type			CJ-series Special I/O Unit	
Isolation (See note 1.)			Between inputs and PLC signals: Photocoupler (No isolation between input signals.)	
External terminals			18-point detachable terminal block (M3 screws)	
Affect on CPU Unit cycle time			CJ2H CPU Unit: 0.05 ms	
			CJ2M/CJ3M CPU Unit: 0.07 ms	
			CJ1 CPU Unit: 0.2 ms	
Current consumption			420 mA max. at 5 VDC	
Dimensions (mm) (See note 2.)			31 × 90 × 65 (W × H × D)	
Weight			140 g max.	
General specifications			Conforms to general specifications for SYSMAC CJ Series.	
Mounting position			CJ-series CPU Rack or CJ-series Expansion Rack	
Maximum number of Units			Per CPU Rack or Expansion Rack (See note 3.)	
			Power Supply Unit: CJ1W-PA205R, CJ1W-PA205C, CJ1W-PD025	No. of mountable Units: CPU Rack: 10 Units/Rack; Expansion Rack: 10 Units/Rack
			Power Supply Unit: CJ1W-PA202	No. of mountable Units: CPU Rack: 5 Units/Rack; Expansion Rack: 6 Units/Rack
			Power Supply Unit: CJ1W-PD022	No. of mountable Units: CPU Rack: 3 Units/Rack; Expansion Rack: 4 Units/Rack
Data exchange with CPU Units (See note 4.)			Special I/O Unit Area in CIO Area (CIO 2000 to CIO 2959): 10 words per Unit Special I/O Unit Area in DM Area (D20000 to D29599): 100 words per Unit	
Inputs specifications	Number of analog inputs		4	8
	Input signal range (See note 5.)		1 to 5 V 0 to 5 V 0 to 10 V –10 to 10 V 4 to 20 mA (See note 6.)	
	Maximum rated input (for 1 point) (See note 7.)		Voltage Input: ±15 V Current Input: ±30 mA	
	Input impedance		Voltage Input: 1 MΩ min. Current Input: 250 Ω (rated value)	
	Resolution (See note 8.)		4,000/8,000	4,000/8,000
	Converted output data		16-bit binary data	
	Accuracy (See note 9.)	23±2°C	Voltage Input: ±0.2% of full scale Current Input: ±0.4% of full scale	
		0°C to 55°C	Voltage Input:±0.4% of full scale Current Input: ±0.6% of full scale	
	A/D conversion period (See note 10.)		1 ms/point or 250 μs/point (See note 8.)	1 ms/point or 250 μs/point (See note 8.)
Inputs functions	Mean value processing		Stores the last "n" data conversions in the buffer, and stores the mean value of the conversion values. Number of mean value buffers: n = 2, 4, 8, 16, 32, 64	
	Peak value hold		Stores the maximum conversion value while the Peak Value Hold Bit is ON.	
	Input disconnection detection		Detects the disconnection and turns ON the Disconnection Detection Flag. (See note 11.)	

Note

1. Do not apply a voltage higher than 600 V to the terminal block when performing withstand voltage test on this Unit. Otherwise, internal elements may deteriorate.
2. Refer to *Dimensions* on page 441 for details on the Unit's dimensions.
3. This is the maximum number of Units that can be mounted to a CJ2H-CPU6□ CPU Unit (no EtherNet/IP). The maximum number of Analog Output Units that can be mounted to one Rack varies depending on the current consumption of the other Units mounted to the Rack.

Power Supply Unit	Rack	CJ1W-DA021 CJ1W-DA041 (5 VDC 120 mA) CJ1W-DA08V CJ1W-DA08C (5 VDC 140 mA)	CS1W-AD041-V1 CJ1W-AD081-V1 (5 VDC 420 mA)	CJ1W-MAD42 (5 VDC 580 mA)
CJ1W-PA205R CJ1W-PA205C CJ1W-PD025	CPU Rack	10	9	7
	Expansion Rack	10	10	8
CJ1W-PA202	CPU Rack	5	4	3
	Expansion Rack	6	6	4
CJ1W-PD022	CPU Rack	3	2	1
	Expansion Rack	4	4	3

4. Data Transfer with the CPU Unit

Special I/O Unit Area in CIO Area (CIO 2000 to CIO 2959, CIO 200000 to CIO 295915)	10 words per Unit refreshed cyclically	CPU Unit to Analog Input Unit	Peak value hold function
		Analog Input Unit to CPU Unit	Analog input values Line disconnection detection Alarm flags Etc.
Special I/O Unit Area in DM Area (D20000 to D29599)	100 words per Unit refreshed cyclically	CPU Unit to Analog Input Unit	Input signal conversion ON/OFF Signal range specifications Averaging specifications Resolution/conversion time setting Operation mode setting

5. Input signal ranges can be set for each input.
6. Voltage input or current input are chosen by using the voltage/current switch at the back of the terminal block.
7. The Analog Input Unit must be operated according to the input specifications provided here. Operating the Unit outside these specifications will cause the Unit to malfunction.
8. The resolution can be set to 8,000 and the conversion time to 250 μs in the DM Area (m+18). There is only one setting for both of these, i.e., they are both enabled or disabled together.
9. The accuracy is given for full scale. For example, an accuracy of ±0.2% means a maximum error of ±8 (BCD).

   The default setting is adjusted for voltage input. To use current input, perform the offset and gain adjustments as required.
10. A/D conversion time is the time it takes for an analog signal to be stored in memory as converted data after it has been input. It takes at least one cycle before the converted data is read by the CPU Unit.
11. Line disconnection detection is supported only when the range is set to 1 to 5 V or 4 to 20 mA. If there is no input signal when the 1 to 5-V or 4 to 20-mA range is set, the Line Disconnection Flag will turn ON.

3-1-2 Input Function Block Diagram

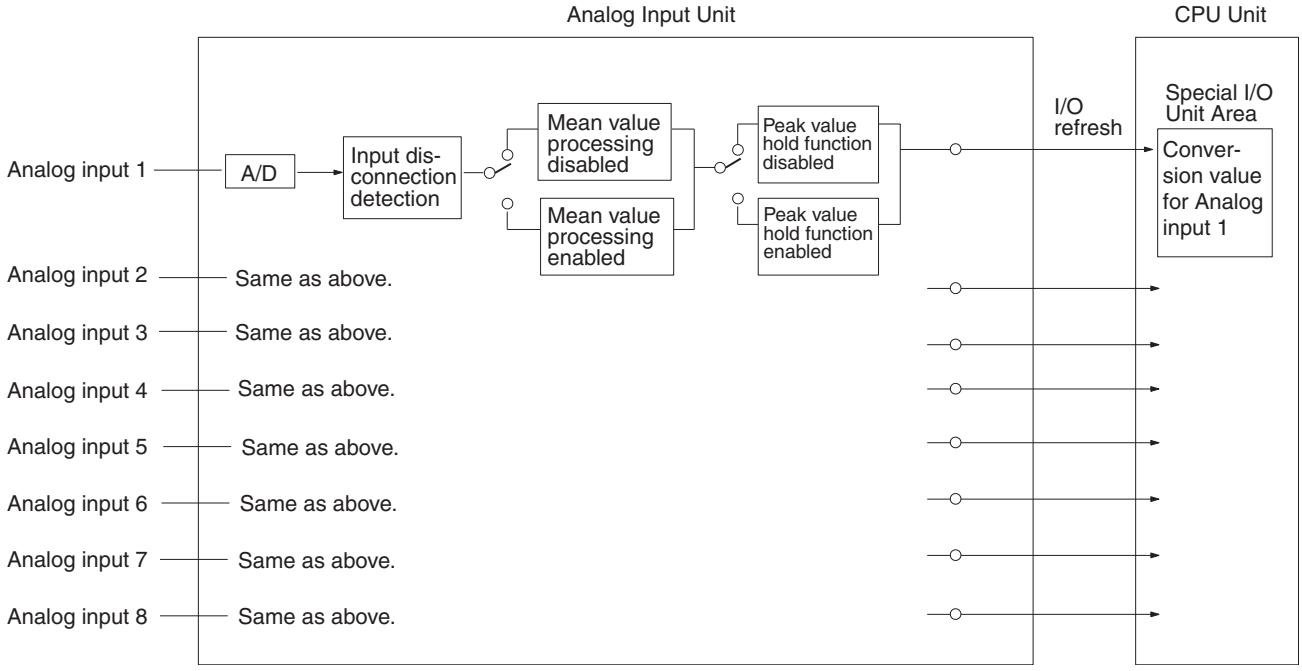

Note There are only four analog inputs for the CJ1W-AD041-V1.

3-1-3 Input Specifications

If signals that are outside the specified range provided below are input, the conversion values (16-bit binary data) used will be either the maximum or minimum value.

Range: 1 to 5 V (4 to 20 mA)

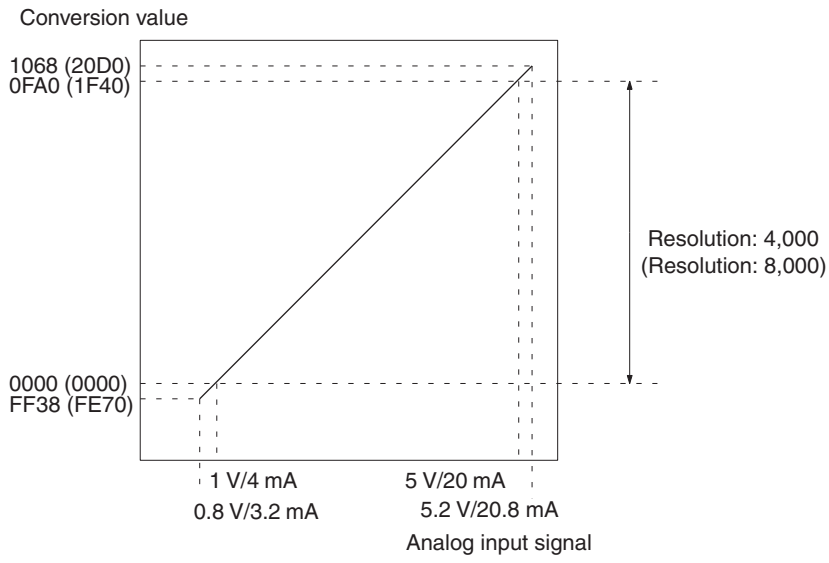

Range: 0 to 10 V

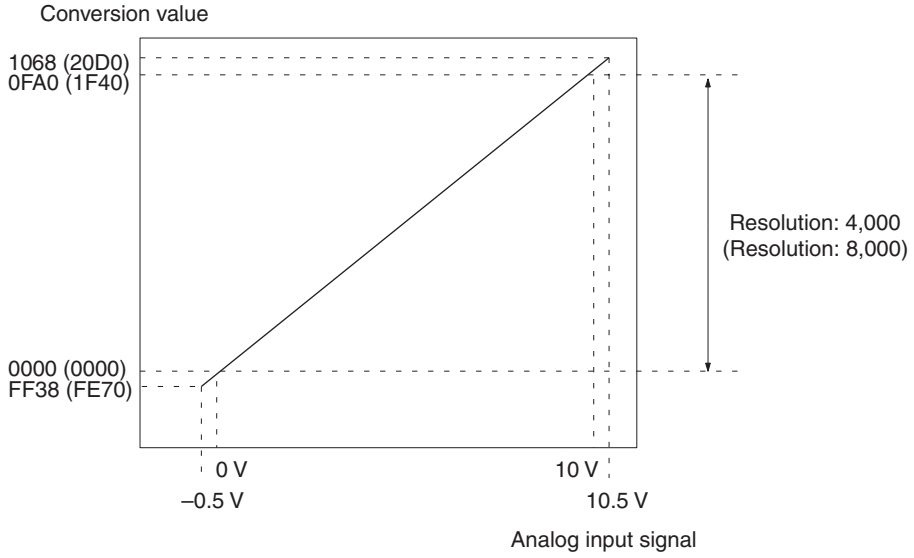

Range: 0 to 5 V

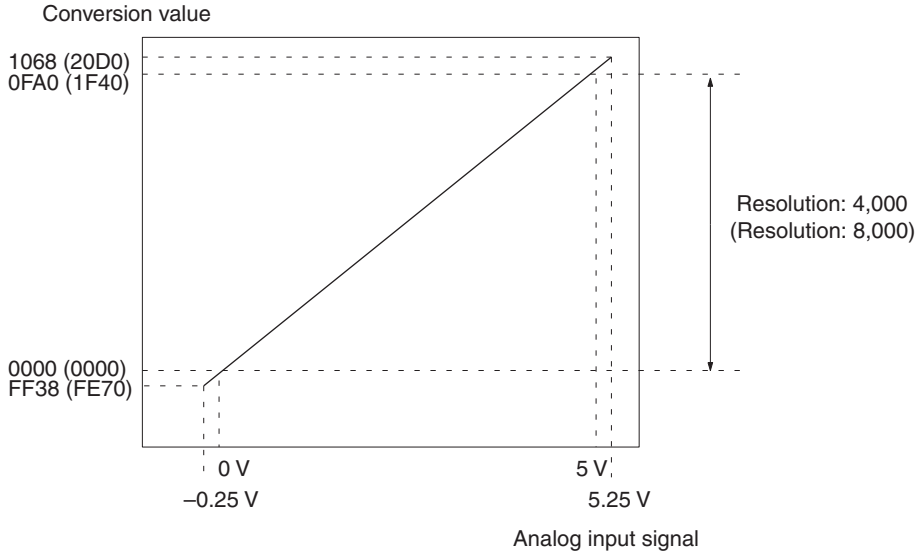

Range: –10 to 10 V

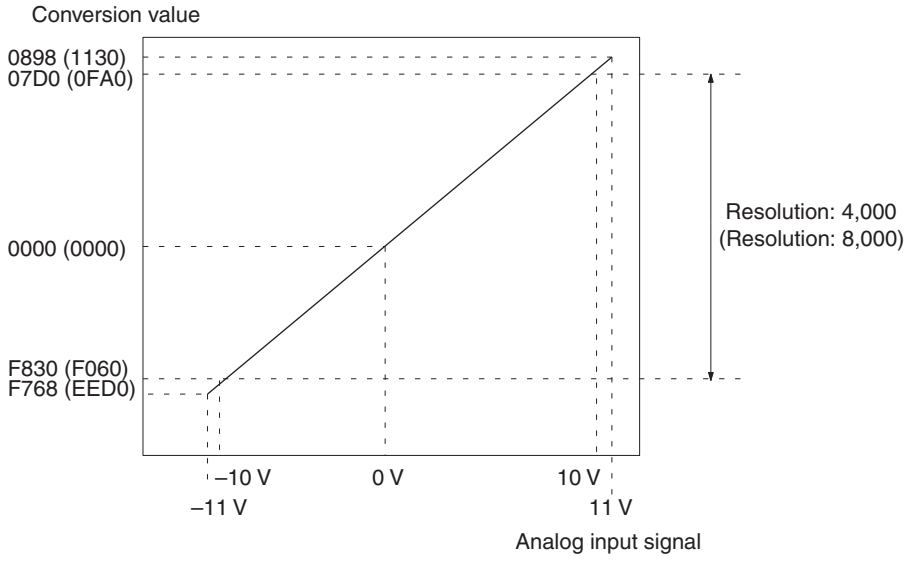

Note The conversion values for a range of –10 to 10 V will be as follows (for a resolution of 4,000):

16-bit binary data	BCD
F768	–2200
:	:
FFFF	–1
0000	0
0001	1
:	:
0898	2200

3-2 Operating Procedure

Follow the procedure outlined below when using Analog Input Units.

Installation and Settings

1,2,3...

1. Set the operation mode to normal mode.

   Set the DIP switch on the front panel of the Unit, or set the operation mode in DM word m+18, to normal mode.
2. Set the voltage/current switch at the back of the terminal block.
3. Use the unit number switches on the front panel of the Unit to set the unit number.
4. Wire the Unit.
5. Turn ON the power to the PLC.
6. Create the Input tables.
7. Make the Special Input Unit DM Area settings.
   - Set the input numbers to be used.
   - Set the input signal ranges.
   - Set the number of mean processing samplings.
   - Conversion period and resolution
8. Turn the power to the PLC OFF and ON, or turn ON the Special I/O Unit Restart Bit.

When the input for the connected devices needs to be calibrated, follow the procedures in *Offset Gain Adjustment* below. Otherwise, skip to *Operation* below.

Offset and Gain Adjustment

1,2,3...

1. Set the operation mode to adjustment mode.

   Set the DIP switch on the front panel of the Unit, or set the operation mode in DM word m+18, to adjustment mode.
2. Set the voltage/current switch at the back of the terminal block.
3. Turn ON the power to the PLC.
   Be sure to set the PLC to PROGRAM mode.
4. Adjust the offset and gain.
5. Turn OFF the power to the PLC.
6. Set the operation mode to normal mode.

   Set the DIP switch on the front panel of the Unit, or set the operation mode in DM word m+18, to normal mode.

Operation

1,2,3...

1. Turn ON the power to the PLC.
2. Ladder program
   - Read conversion values or write set values by means of MOV(021) and XFER(070).
   - Specify the peak hold function.
   - Obtain disconnection notifications and error codes.

3-2-1 Procedure Examples

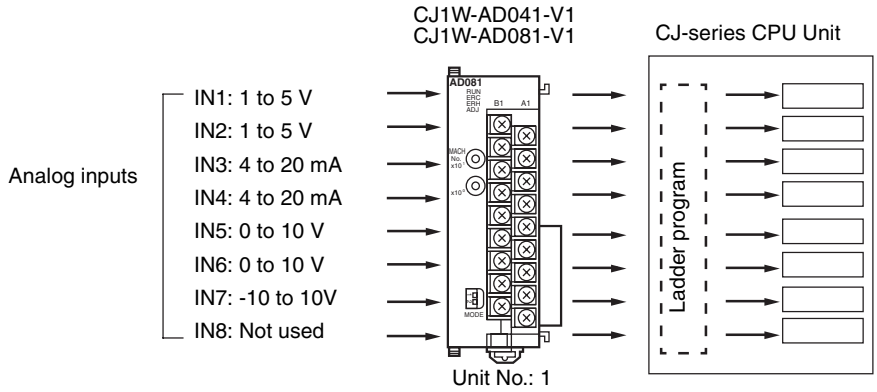

Setting the Analog Input Unit

1,2,3... 1. Set the operation mode switch on the front panel of the Unit. Refer to *3-3-3 Operation Mode Switch* for further details. (This setting can also be made in DM word m+18.)

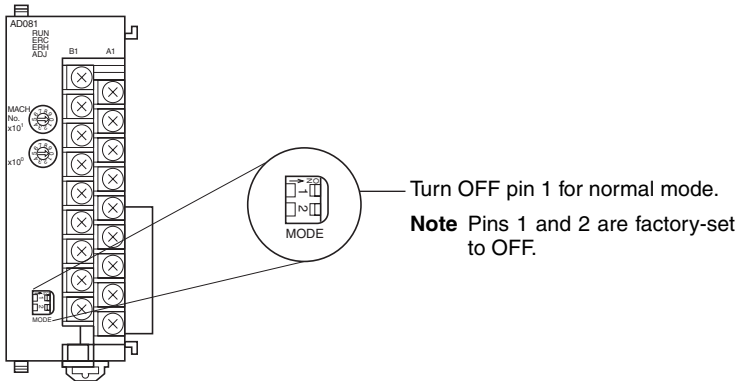

2. Set the voltage/current switch. Refer to *3-3-4 Voltage/Current Switch* for further details.

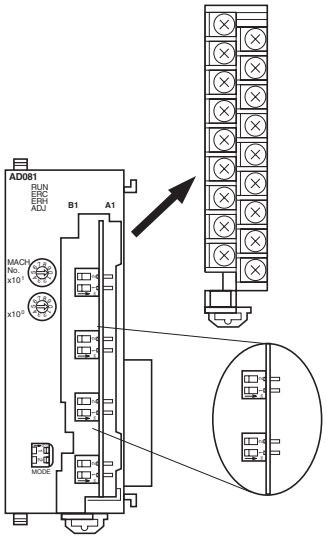

3. Set the unit number switches. Refer to *3-3-2 Unit Number Switches* for further details.

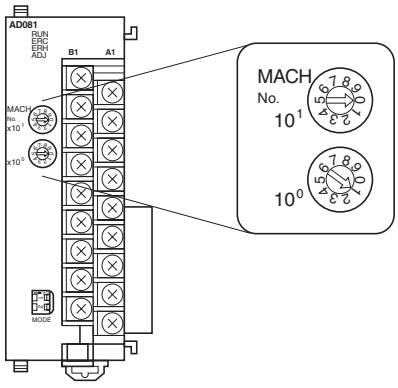

If the unit number is set to 1, words will be allocated to the Analog Input Unit in Special I/O Unit Area CIO 2010 to CIO 2019 and in the Special I/O Unit Area D20100 to D20199.

4. Connect and wire the Analog Input Unit. Refer to *1-2-1 Mounting Procedure*, *3-4 Wiring* or *3-4-4 Input Wiring Example* for further details.

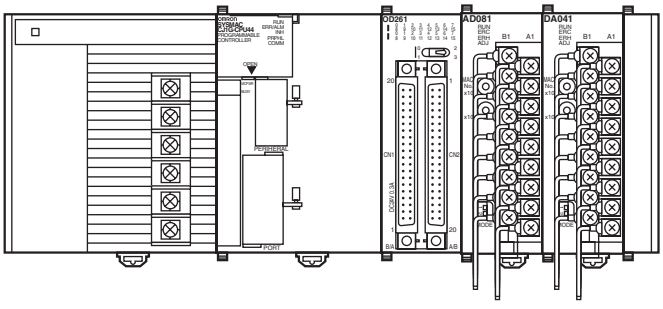

5. Turn ON the power to the PLC.

Creating I/O Tables

After turning ON the power to the PLC, be sure to create the I/O tables.

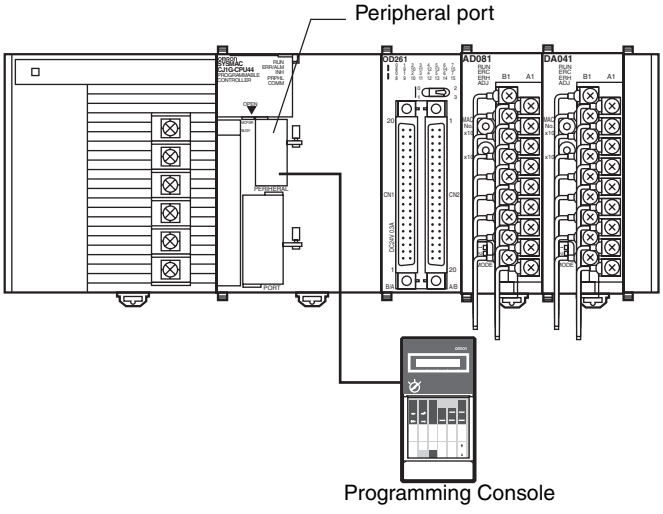

Initial Data Settings

1,2,3... 1. Specify the Special I/O Unit DM Area settings. Refer to *3-5-4 Fixed Data Allocations* for further details.

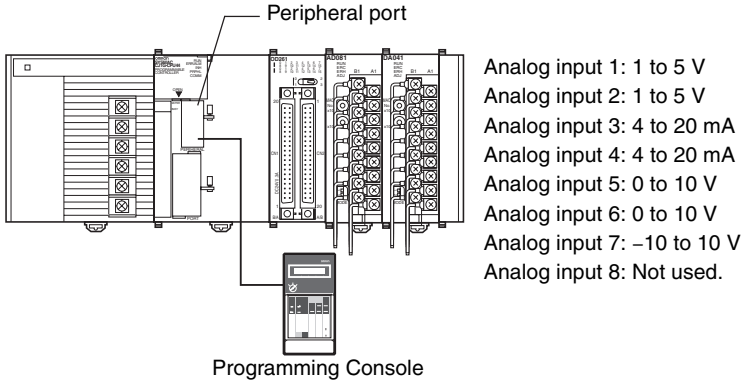

- The following diagram shows the input settings used. Refer to *Allocations in DM Area* on page 103 and *3-6-1 Input Settings and Conversion Values* for more details.

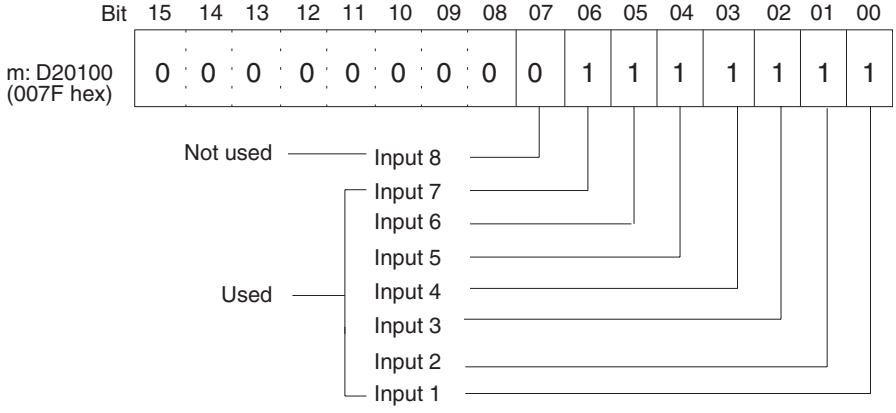

- The following diagram shows the input range settings. Refer to *DM Allocation Contents* on page 103 and *3-6-1 Input Settings and Conversion Values* for more details.

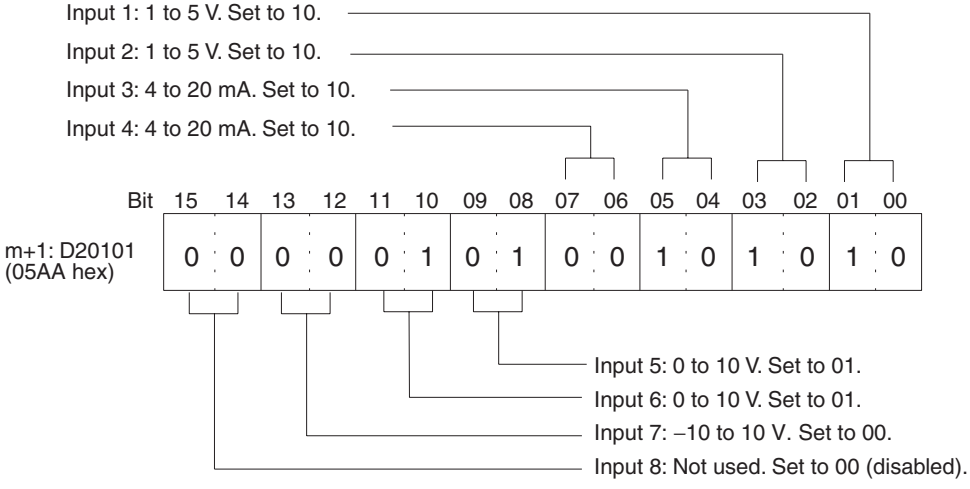

- The following diagram shows the conversion time/resolution setting. (Refer to *3-6-2 Conversion Time/Resolution Setting*.)

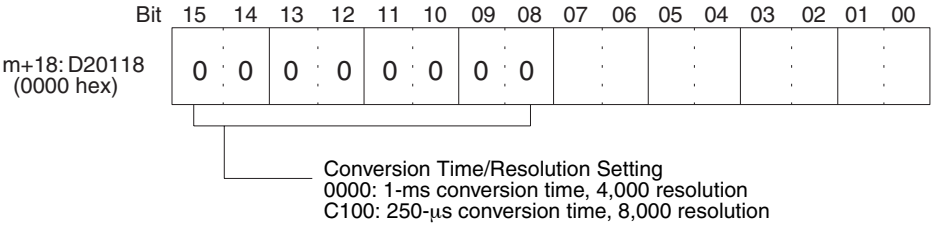

2. Cycle the power to the PLC.

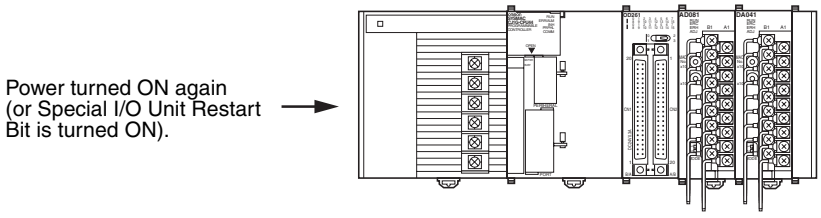

Creating Ladder Programs

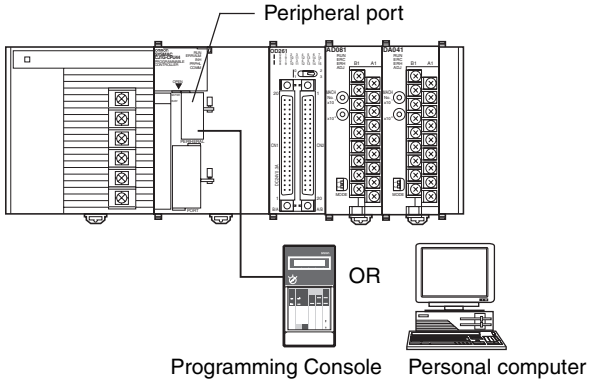

The data that is converted from analog to digital and output to CIO words (n + 1) to (n+ 7) of the Special I/O Unit Area (CIO 2011 to CIO2017), is stored in the specified addresses D00100 to D00106 as signed binary values 0000 to 0FA0 hex.

- The following table shows the addresses used for analog input.

Input number	Input signal range	Input conversion value address (n = CIO 2010) (See note 1.)	Conversion data holding address (See note 2.)
1	1 to 5 V	(n+1) = CIO 2011	D00100
2	1 to 5 V	(n+2) = CIO 2012	D00101
3	4 to 20 mA	(n+3) = CIO 2013	D00102
4	4 to 20 mA	(n+4) = CIO 2014	D00103
5	0 to 10 V	(n+5) = CIO2015	D00104
6	0 to 10 V	(n+6) = CIO2016	D00105
7	–10 to 10 V	(n+7) = CIO2017	D00106
8	Not used	---	---

Note 1. The addresses are fixed according to the unit number of the Special I/O Unit. Refer to *3-3-2 Unit Number Switches* for further details.

2. Set as required.

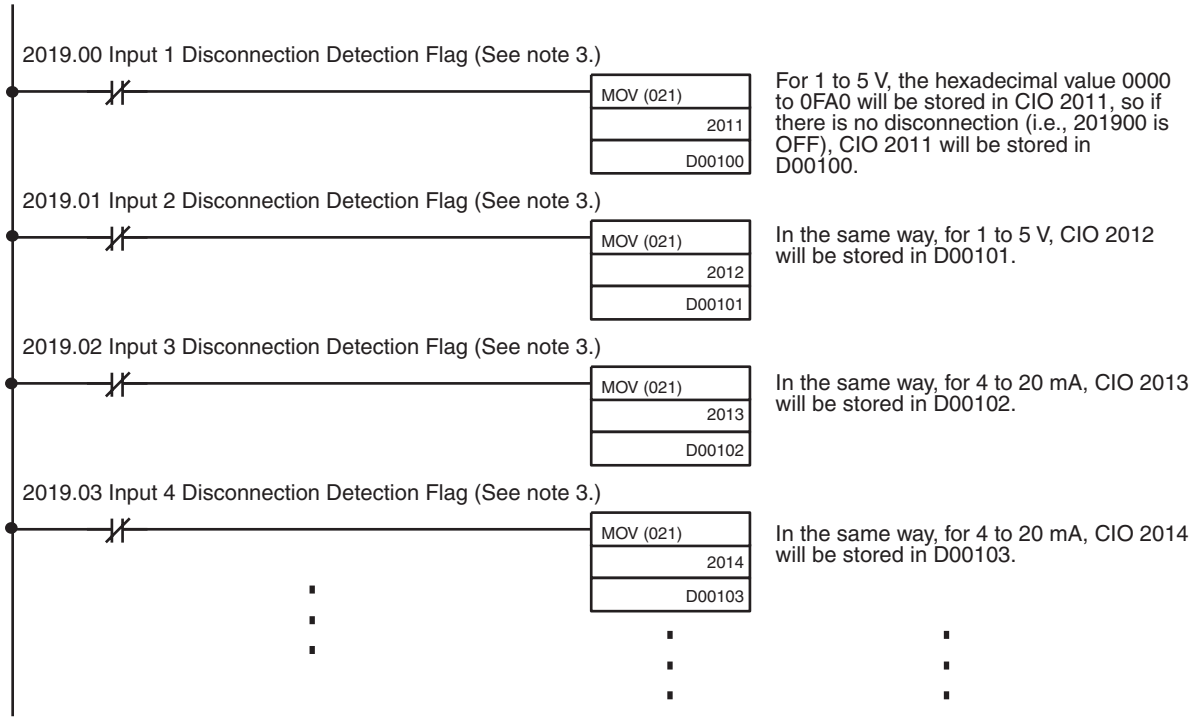

3. Bits 00 to 07 of word (n + 9) are allocated to the input Disconnection Detection Flags. Refer to *Allocations for Normal Mode* on page 106 for further details.

3-3 Components and Switch Settings

CJ1W-AD041-V1
CJ1W-AD081-V1

Front

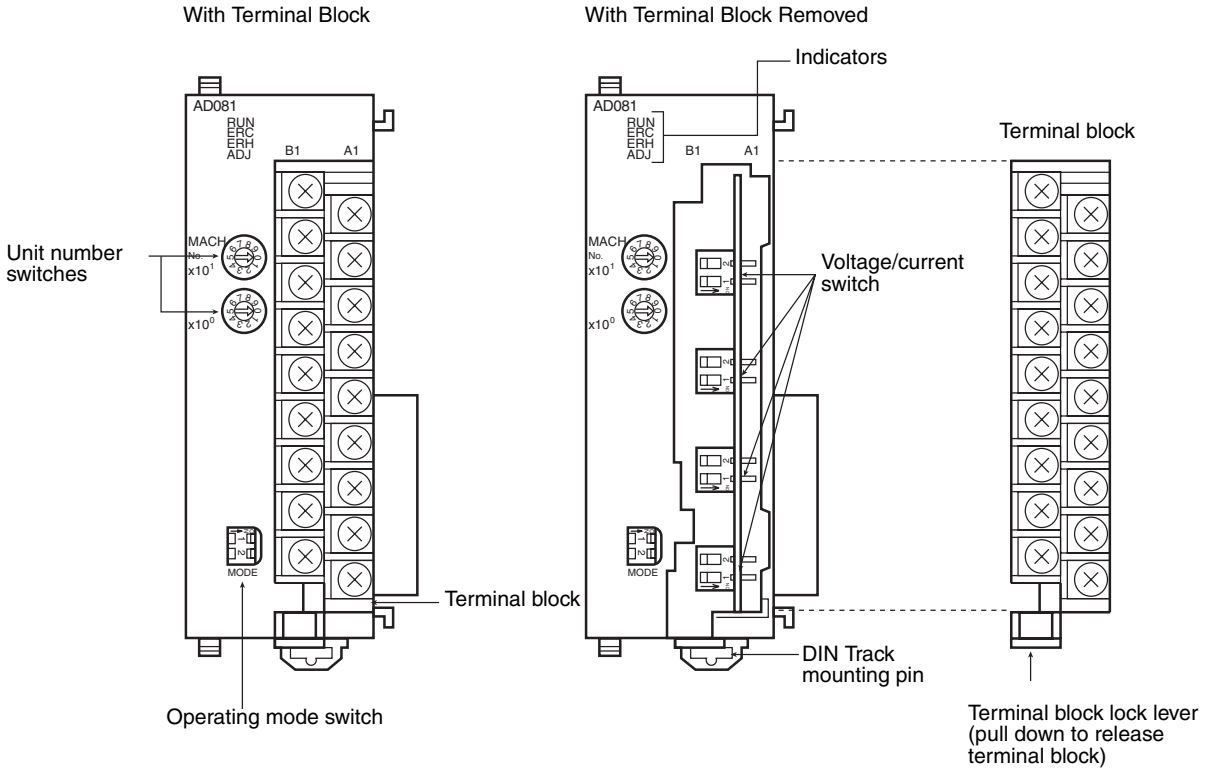

Side

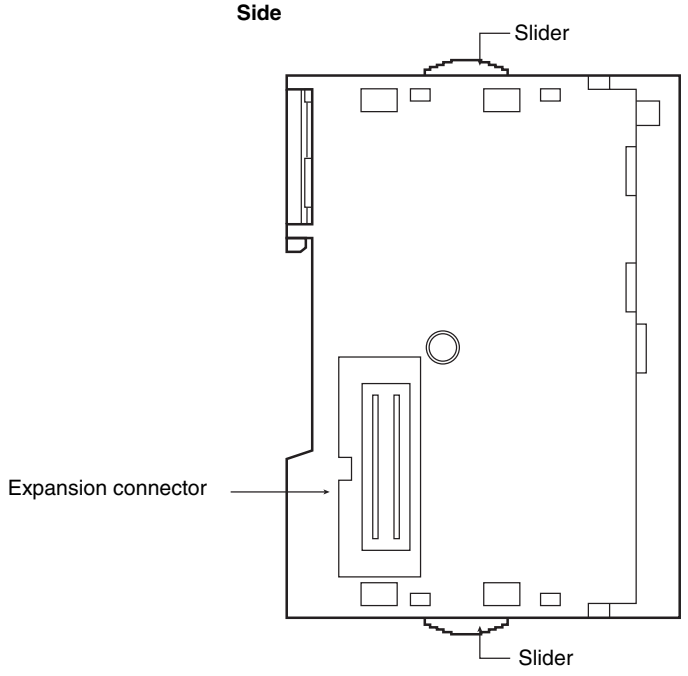

The terminal block is attached using a connector. It can be removed by lowering the lever at the bottom of the terminal block.

The lever must normally be in the raised position. Confirm this before operation.

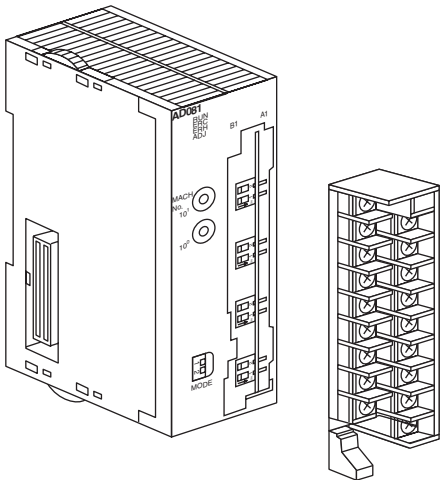

3-3-1 Indicators

The indicators show the operating status of the Unit. The following table shows the meanings of the indicators.

Indicator	Meaning	Indicator status	Operating status
RUN (green)	Operating	Lit	Operating in normal mode.
		Not lit	Unit has stopped exchanging data with the CPU Unit.
ERC (red)	Error detected by Unit	Lit	Alarm has occurred (such as disconnection detection) or initial settings are incorrect.
		Not lit	Operating normally.
ERH (red)	Error in the CPU Unit	Lit	Error has occurred during data exchange with the CPU Unit.
		Not lit	Operating normally.
ADJ (yellow)	Adjusting	Flashing	Operating in offset/gain adjustment mode.
		Not lit	Other than the above.

3-3-2 Unit Number Switches

The CPU Unit and Analog Input Unit exchange data via the Special I/O Unit Area in the CIO Area and DM Area. The words that are allocated to each Analog Input Unit in the Special I/O Unit Area in the CIO Area and DM Area are determined by the setting of the unit number switches on the front panel of the Unit.

Always turn OFF the power before setting the unit number. Use a flat-blade screwdriver, being careful not to damage the slot in the screw. Be sure not to leave the switch midway between settings.

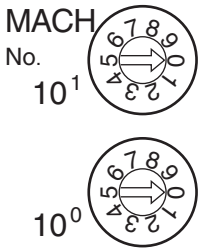

Switch setting	Unit number	Words allocated in Special/O Unit Area in CIO Area	Words allocated in Special/O Unit Area in DM Area
0	Unit #0	CIO 2000 to CIO 2009	D20000 to D20099
1	Unit #1	CIO 2010 to CIO 2019	D20100 to D20199
2	Unit #2	CIO 2020 to CIO 2029	D20200 to D20299
3	Unit #3	CIO 2030 to CIO 2039	D20300 to D20399
4	Unit #4	CIO 2040 to CIO 2049	D20400 to D20499
5	Unit #5	CIO 2050 to CIO 2059	D20500 to D20599
6	Unit #6	CIO 2060 to CIO 2069	D20600 to D20699
7	Unit #7	CIO 2070 to CIO 2079	D20700 to D20799
8	Unit #8	CIO 2080 to CIO 2089	D20800 to D20899
9	Unit #9	CIO 2090 to CIO 2099	D20900 to D20999
10	Unit #10	CIO 2100 to CIO 2109	D21000 to D21099
to	to	to	to
n	Unit #n	CIO 2000 + (n × 10) to CIO 2000 + (n × 10) + 9	D20000 + (n × 100) to D20000 + (n × 100) + 99
to	to	to	to
95	Unit #95	CIO 2950 to CIO 2959	D29500 to D29599

Note If two or more Special I/O Units are assigned the same unit number, a “UNIT No. DPL ERR” error (in the Programming Console) will be generated (A40113 will turn ON) and the PLC will not operate.

3-3-3 Operation Mode Switch

The operation mode switch on the front panel of the Unit is used to set the operation mode to either normal mode or adjustment mode (for adjusting offset and gain).

Pin number		Mode
1	2	
OFF	OFF	Normal mode
ON	OFF	Adjustment mode

⚠ **Caution** Do not set the pins to any combination other than those shown in the above table. Be sure to set pin 2 to OFF.

⚠ **Caution** Be sure to turn OFF the power to the PLC before installing or removing the Unit.

Note The operation mode can also be set using bits 00 to 07 of DM word m+18, in addition to the hardware operation mode switch. The contents of DM word m+18 are shown below.

Bit	15	14	13	12	11	10	09	08	07	06	05	04	03	02	01	00
D (m+18)	Conversion period/resolution setting								Operation mode setting 00: Normal mode C1: Adjustment mode							

m = D20000 + (unit number x 100)

Relationship between Operation Mode Setting and Hardware Operation Mode Switch

Hardware operation mode switch	Setting of bits 00 to 07 of m+18	Operation mode when power is turned ON or Unit is restarted
Normal mode	Normal mode	Normal mode
Normal mode	Adjustment mode	Adjustment mode
Adjustment mode	Normal mode	Adjustment mode
Normal mode	Adjustment mode	Adjustment mode

3-3-4 Voltage/Current Switch

The analog conversion input can be switched from voltage input to current input by changing the pin settings on the voltage/current switch located on the back of the terminal block.

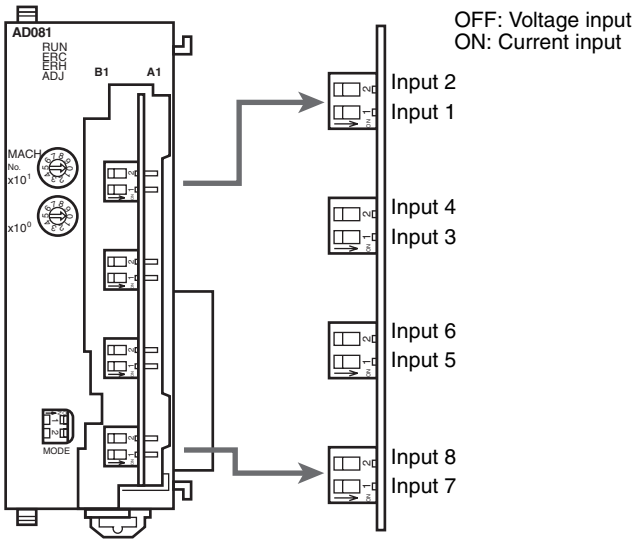

Note There are only four inputs for the CJ1W-AD041-V1.

⚠ **Caution** Be sure to turn OFF the power to the PLC before mounting or removing the terminal block.

3-4 Wiring

3-4-1 Terminal Arrangement

The signal names corresponding to the connecting terminals are as shown in the following diagram.

CJ1W-AD041-V1

Input 2 (+)	B1	A1	Input 1 (+)
Input 2 (–)	B2	A2	Input 1 (–)
Input 4 (+)	B3	A3	Input 3 (+)
Input 4 (–)	B4	A4	Input 3 (–)
AG	B5	A5	AG
N.C.	B6	A6	N.C.
N.C.	B7	A7	N.C.
N.C.	B8	A8	N.C.
N.C.	B9	A9	N.C.

CJ1W-AD081-V1

Input 2 (+)	B1	A1	Input 1 (+)
Input 2 (–)	B2	A2	Input 1 (–)
Input 4 (+)	B3	A3	Input 3 (+)
Input 4 (–)	B4	A4	Input 3 (–)
AG	B5	A5	AG
Input 6 (+)	B6	A6	Input 5 (+)
Input 6 (–)	B7	A7	Input 5 (–)
Input 8 (+)	B8	A8	Input 7 (+)
Input 8 (–)	B9	A9	Input 7 (–)

Note
1. The number of analog inputs that can be used is set in the DM Area.
2. The input signal ranges for individual inputs are set in the DM Area. The input signal range can be set separately for each input.
3. The AG terminals are connected to the 0-V analog circuit in the Unit. Connecting the input line shield can improve noise resistance.

⚠ **Caution** Do not make any connections to the N.C. terminals.

3-4-2 Internal Circuitry

The following diagrams show the internal circuitry of the analog input section.

Input Circuitry

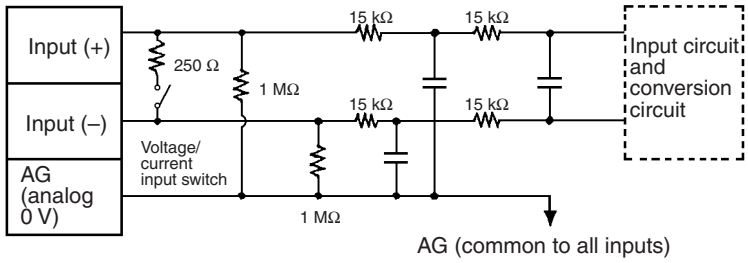

Internal Configuration

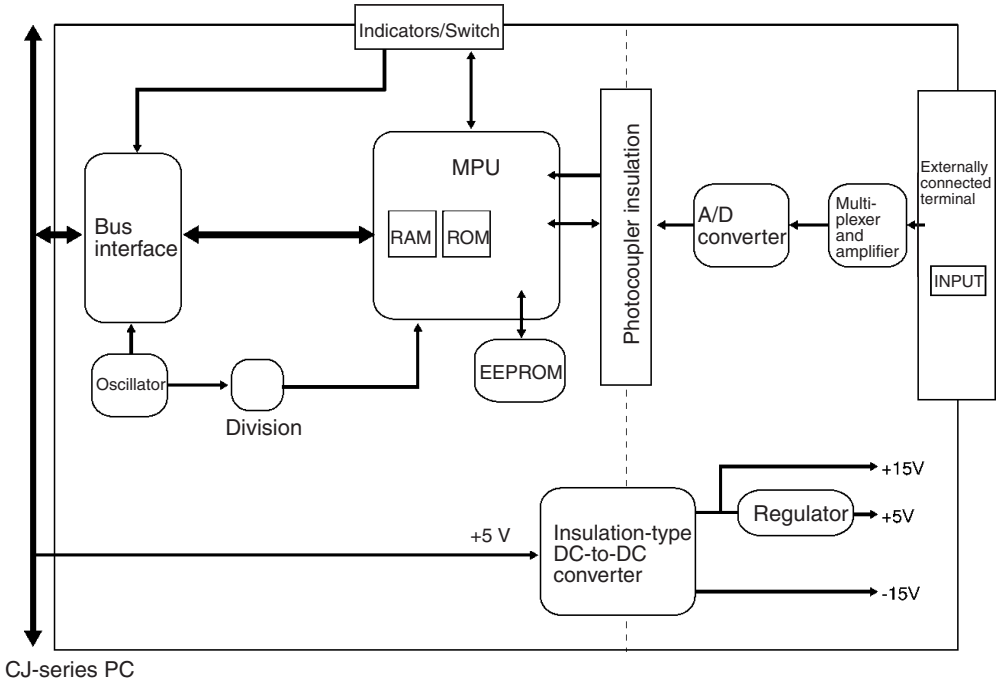

3-4-3 Voltage Input Disconnection

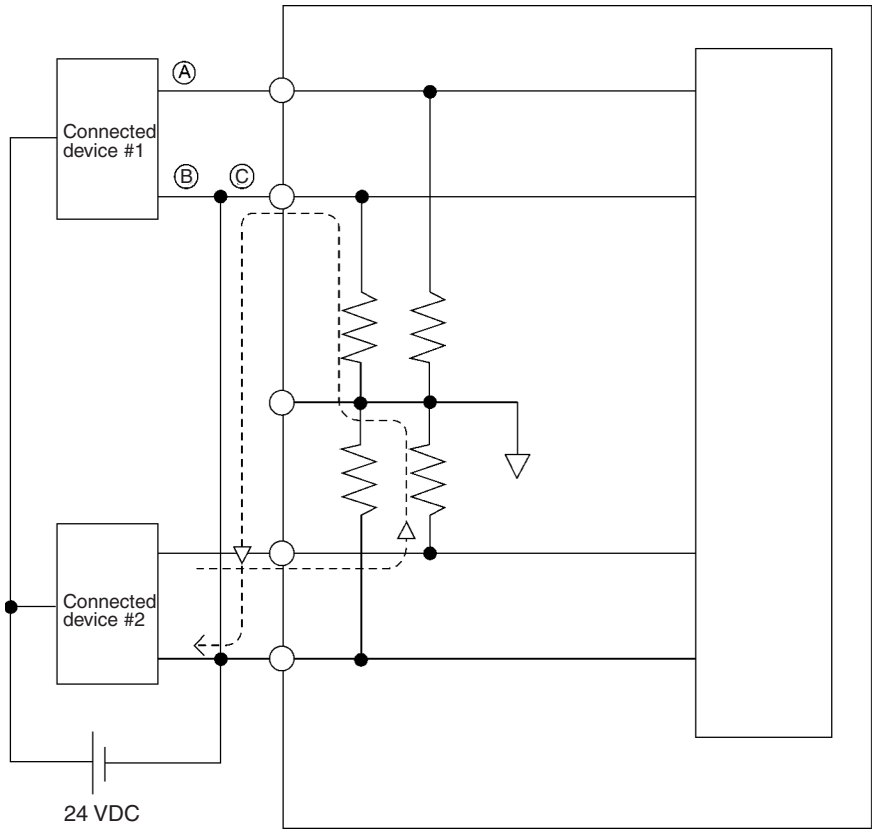

Note If the connected device #2 in the above example outputs 5 V and the power supply is shared by 2 channels as shown in the above diagram, approximately one third of the voltage, or 1.6 V, will be input at input 1.

When voltage inputs are used and a disconnection occurs, separate the power supply at the side of the connected devices or use an insulating device (isolator) for each input to avoid the following problems.

When the power supply at the connected devices is shared and section A or B is disconnected, power will flow in the direction of the broken line and the output voltage of the other connected devices will be reduced to between a third to a half of the voltage. If 1 to 5 V is used and the reduced voltage output, disconnection may not be detectable. If section C is disconnected, the power at the (–) input terminal will be shared and disconnection will not be detectable.

For current inputs, sharing the power supply between the connected devices will not cause any problems.

3-4-4 Input Wiring Example

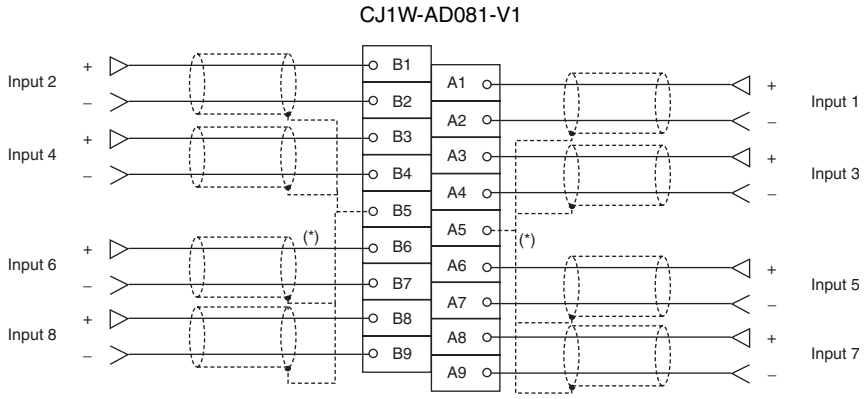

Note There are only four inputs for the CJ1W-AD041-V1.
Inputs 5 to 8 are not used.

Note Crimp-type terminals must be used for terminal connections, and the screws must be tightened securely. Use M3 screws and tighten them to a torque of 0.5 N·m.

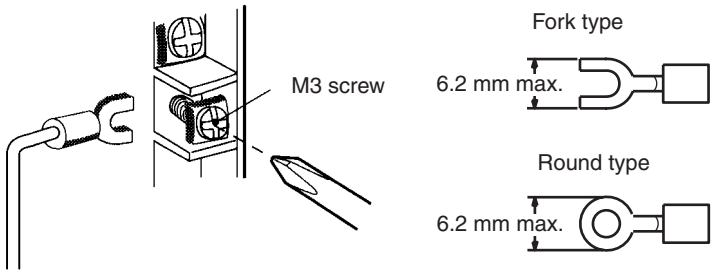

Note

1. When using current inputs, turn ON the voltage/current switches. Refer to *3-3-4 Voltage/Current Switch* for further details.
2. For inputs that are not used, either set to “0: Not used” in the input number settings (refer to *3-6-1 Input Settings and Conversion Values*) or short-circuit the voltage input terminals (V+) and (V–). If this is not performed and the inputs are set for the 1 to 5-V or 4 to 20-mA range, the Line Disconnection Flag will turn ON.
3. When connecting the shield of the analog input cables* to the Unit’s AG terminals, as shown in the above diagram, use a wire that is 30 cm max. in length if possible.

⚠ **Caution** Do not connect anything to N.C. terminals shown in the wiring diagram on page 97.

Connect the analog input line shield to the AG terminal on the Analog Input Unit to improve noise resistance.

3-4-5 Input Wiring Considerations

When wiring inputs, apply the following points to avoid noise interference and optimize Analog Input Unit performance.

- Use two-core shielded twisted-pair cables for input connections.

- Route input cables separately from the AC cable, and do not run the Unit's cables near a main circuit cable, high voltage cable, or a non-PLC load cable.
- If there is noise interference from power lines (if, for example, the power supply is shared with electrical welding devices or electrical discharge machines, or if there is a high-frequency generation source nearby) install a noise filter at the power supply input area.

3-5 Exchanging Data with the CPU Unit

3-5-1 Outline of Data Exchange

Data is exchanged between the CPU Unit and the CJ1W-AD041-V1/081-V1 Analog Input Unit via the Special I/O Unit Area in the CIO Area (for data used to operate the Unit) and the Special I/O Unit Area in the DM Area (for data used for initial settings).

I/O Refresh Data

Analog input conversion values, which are used as data for Unit operation, are allocated in the Special I/O Unit Area of the CPU Unit according to the unit number, and are exchanged during I/O refreshing.

Fixed Data

The Unit's fixed data, such as the analog input signal ranges and the number of operational mean value buffers is allocated in the Special I/O Unit Area in the DM Area of the CPU Unit according to the unit number, and is exchanged when the power is turned ON or the Unit is restarted.

The conversion time and resolution can be set, along with the operation mode.

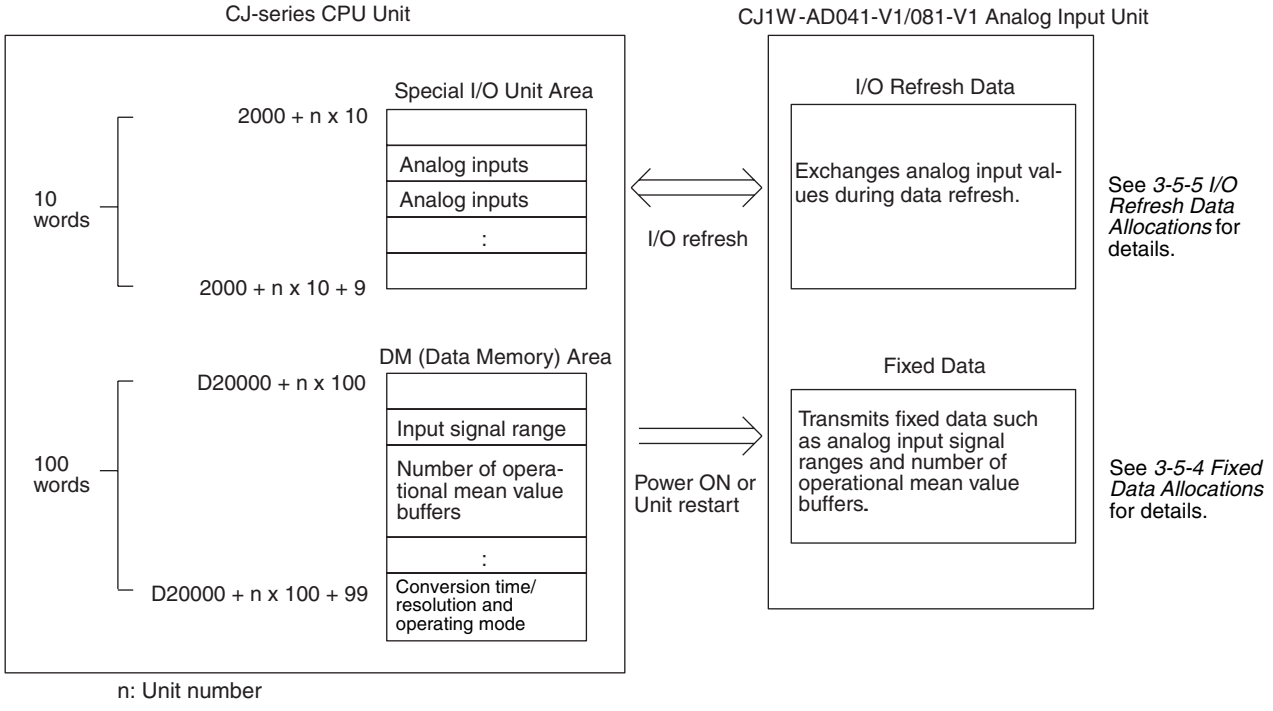

3-5-2 Unit Number Setting

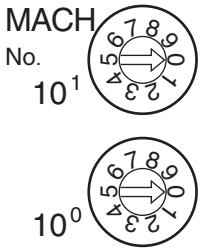

The words in the Special I/O Unit Areas in the CIO Area and DM Area that are allocated to each Analog Input Unit are determined by the unit number switches on the front panel of the Unit.

Switch setting	Unit number	Words allocated in Special I/O Unit Area in CIO Area	Words allocated in Special I/O Unit Area in DM Area
0	Unit #0	CIO 2000 to CIO 2009	D20000 to D20099
1	Unit #1	CIO 2010 to CIO 2019	D20100 to D20199
2	Unit #2	CIO 2020 to CIO 2029	D20200 to D20299
3	Unit #3	CIO 2030 to CIO 2039	D20300 to D20399
4	Unit #4	CIO 2040 to CIO 2049	D20400 to D20499
5	Unit #5	CIO 2050 to CIO 2059	D20500 to D20599
6	Unit #6	CIO 2060 to CIO 2069	D20600 to D20699
7	Unit #7	CIO 2070 to CIO 2079	D20700 to D20799
8	Unit #8	CIO 2080 to CIO 2089	D20800 to D20899
9	Unit #9	CIO 2090 to CIO 2099	D20900 to D20999
10	Unit #10	CIO 2100 to CIO 2109	D21000 to D21099
to	to	to	to
n	Unit #n	CIO 2000 + (n × 10) to CIO 2000 + (n × 10) + 9	D20000 + (n × 100) to D20000 + (n × 100) + 99
to	to	to	to
95	Unit #95	CIO 2950 to CIO 2959	D29500 to D29599

Note If two or more Special I/O Units are assigned the same unit number, a “UNIT No. DPL ERR” error (in the Programming Console) will be generated (A40113 will turn ON) and the PLC will not operate.

3-5-3 Special I/O Unit Restart Bits

To restart the Unit after changing the contents of the DM Area or correcting an error, cycle the power supply to the PLC or turn ON the Special I/O Unit Restart Bit.

Special I/O Unit Area word address	Function	
A50200	Unit No. 0 Restart Bit	Restarts the Unit when turned ON and then OFF again.
A50201	Unit No. 1 Restart Bit	
to	to	
A50215	Unit No. 15 Restart Bit	
A50300	Unit No. 16 Restart Bit	
to	to	
A50715	Unit No. 95 Restart Bit	

Note Replace the Unit if the error is not cleared even though the power supply is cycled or the Restart Bit is turned ON.

3-5-4 Fixed Data Allocations

Allocations in DM Area

The initial settings of the Analog Input Unit are set according to the data allocated in the Special I/O Unit Area in the DM Area. Settings, such as the inputs used and the analog input signal range must be set in this area.

The conversion time and resolution can be set, along with the operation mode, in DM word m+18.

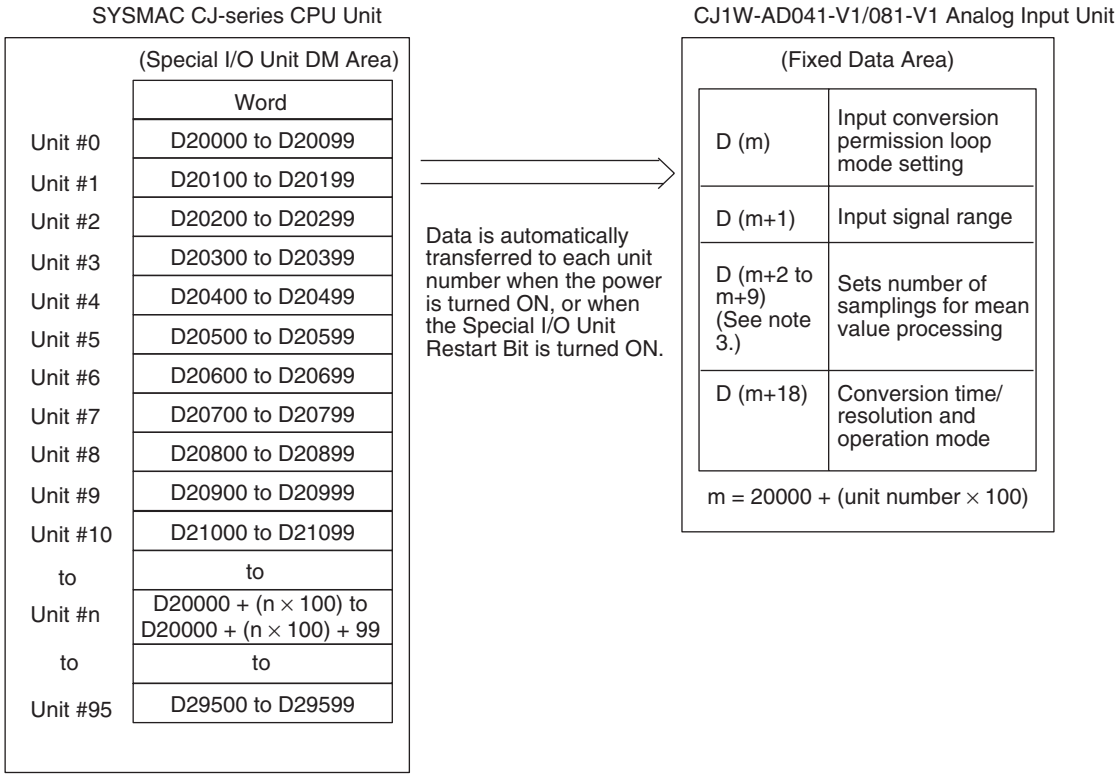

Note

1. The words in the Special I/O Unit DM Area that are allocated to the Analog Input Unit are determined by the setting of the unit number switches on the front panel of the Unit. Refer to *3-5-2 Unit Number Setting* for details on the method used to set the unit number switches.
2. If two or more Special I/O Units are assigned the same unit number, a "UNIT No. DPL ERR" error (in the Programming Console) will be generated (A40113 will turn ON) and the PLC will not operate.
3. Only D(m) to D(m+5) are supported by the CJ1W-AD041-V1.

Allocations in DM Area

The following table shows the allocation of DM Area words and bits for both normal and adjustment mode.

CJ1W-AD041-V1

DM Area word	Bits															
	15	14	13	12	11	10	9	8	7	6	5	4	3	2	1	0
D (m)	Not used. (Settings are ignored.)								Not used.				Input use setting			
													Input 4	Input 3	Input 2	Input 1
D (m+1)	Not used. (Settings are ignored.)								Input signal range setting							
									Input 4		Input 3		Input 2		Input 1	
D (m+2)	Input 1: Mean value processing setting															
D (m+3)	Input 2: Mean value processing setting															
D (m+4)	Input 3: Mean value processing setting															
D (m+5)	Input 4: Mean value processing setting															
D (m+6) to (m+17)	Not used. (Settings are ignored.)															
D (m+18)	Conversion time/resolution setting 00: Conversion time of 1 ms and resolution of 4,000 C1: Conversion time of 250 μs and resolution of 8,000								Operation mode setting 00: Normal mode C1: Adjustment mode							

Note For the DM word addresses, m = D20000 + (unit number × 100).

CJ1W-AD081-V1

DM Area word	Bits															
	15	14	13	12	11	10	9	8	7	6	5	4	3	2	1	0
D (m)	Not used. (Settings are ignored.)								Input use setting							
									Input 8	Input 7	Input 6	Input 5	Input 4	Input 3	Input 2	Input 1
D (m+1)	Input signal range setting															
	Input 8		Input 7		Input 6		Input 5		Input 4		Input 3		Input 2		Input 1	
D (m+2)	Input 1: Mean value processing setting															
D (m+3)	Input 2: Mean value processing setting															
D (m+4)	Input 3: Mean value processing setting															
D (m+5)	Input 4: Mean value processing setting															
D (m+6)	Input 5: Mean value processing setting															
D (m+7)	Input 6: Mean value processing setting															
D (m+8)	Input 7: Mean value processing setting															
D (m+9)	Input 8: Mean value processing setting															
D (m+10) to (m+17)	Not used. (Settings are ignored.)															
D (m+18)	Conversion time/resolution setting 00: Conversion time of 1 ms and resolution of 4,000 C1: Conversion time of 250 μs and resolution of 8,000								Operation mode setting 00: Normal mode C1: Adjustment mode							

Note For the DM word addresses, m = D20000 + (unit number × 100).

Set Values and Stored Values

Item		Contents	Page
Input	Use setting	0: Not used. 1: Used.	108
	Input signal range	00: –10 to 10 V 01: 0 to 10 V 10: 1 to 5 V/4 to 20 mA (See note 1.) 11: 0 to 5 V	109
	Mean value processing setting	0000: Mean value processing with 2 buffers (See note 3.) 0001: Mean value processing not used 0002: Mean value processing with 4 buffers 0003: Mean value processing with 8 buffers 0004: Mean value processing with 16 buffers 0005: Mean value processing with 32 buffers 0006: Mean value processing with 64 buffers	111

Note 1. The input signal range of “1 to 5 V” and “4 to 20 mA” is switched using the pins of the voltage/current switch. Refer to *3-3-4 Voltage/Current Switch* for details.

2. The default of mean value processing setting is set to “Mean value processing with 2 buffers.” Refer to *3-6-3 Mean Value Processing*.

3-5-5 I/O Refresh Data Allocations

I/O refresh data for the Analog Input Unit is exchanged according to the allocations in the Special I/O Unit Area.

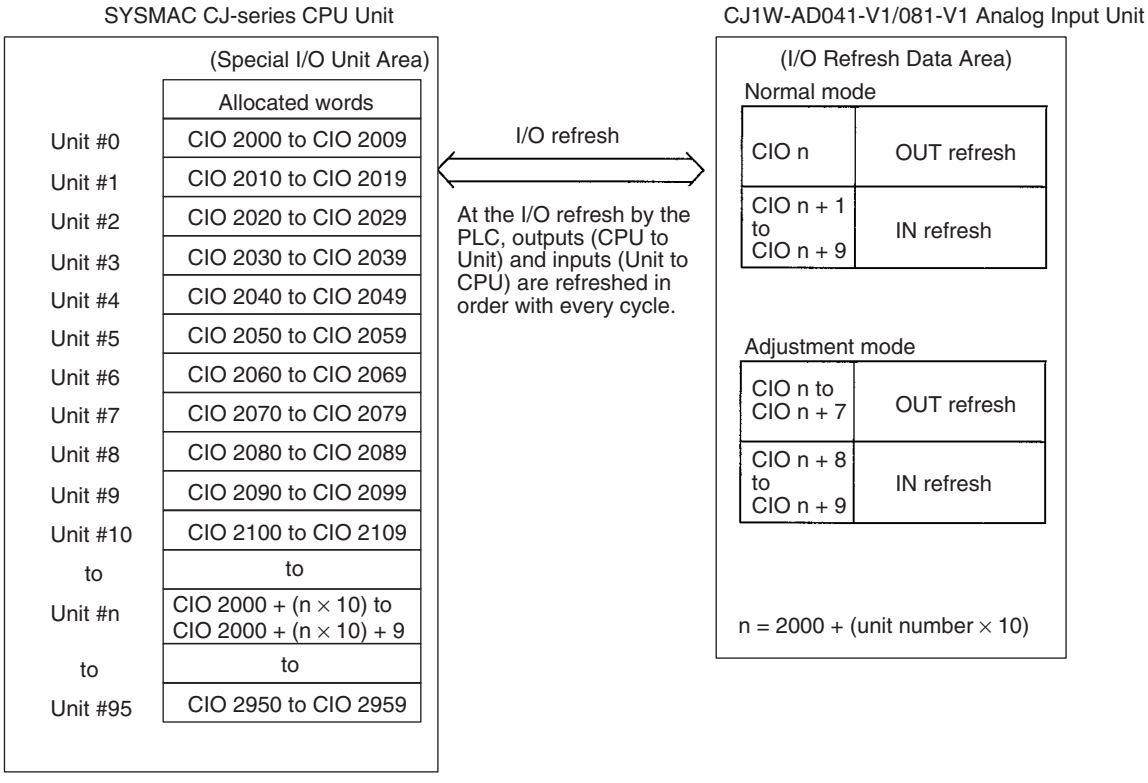

Note 1. The words in the Special I/O Unit Area in the CIO Area that are allocated to the Analog Input Unit are determined by the setting of the unit number switches on the front panel of the Unit. Refer to *3-5-2 Unit Number Setting* for details on the method used to set the unit number switches.

2. If two or more Special I/O Units are assigned the same unit number, a "UNIT No. DPL ERR" error (in the Programming Console) will be generated (A40113 will turn ON) and the PLC will not operate.

Allocations for Normal Mode

For normal mode, set the operation mode switch on the front panel of the Unit as shown in the following diagram, or set bits 00 to 07 in DM word m+18.

Switch color: Brown Switch color: Black

Note The pins are ON when set to the right and OFF when set to the left.

The allocation of words and bits in the CIO Area is shown in the following table.

CJ1W-AD041-V1

I/O	Word	Bits															
		15	14	13	12	11	10	9	8	7	6	5	4	3	2	1	0
Output (CPU to Unit)	n	Not used.												Peak value hold			
														Input 4	Input 3	Input 2	Input 1
Input (Unit to CPU)	n + 1	Input 1 conversion value															
		16^3				16^2				16^1				16^0			
	n + 2	Input 2 conversion value															
	n + 3	Input 3 conversion value															
	n + 4	Input 4 conversion value															
	n + 5	Not used.															
	n + 6	Not used.															
	n + 7	Not used.															
	n + 8	Not used.															
	n + 9	Alarm Flags								Not used.				Disconnection detection			
														Input 4	Input 3	Input 2	Input 1

Note For the CIO word addresses, n = CIO 2000 + (unit number × 10).

CJ1W-AD081-V1

I/O	Word	Bits															
		15	14	13	12	11	10	9	8	7	6	5	4	3	2	1	0
Output (CPU to Unit)	n	Not used.								Peak value hold							
										Input 8	Input 7	Input 6	Input 5	Input 4	Input 3	Input 2	Input 1
Input (Unit to CPU)	n + 1	Input 1 conversion value															
		16^3				16^2				16^1				16^0			
	n + 2	Input 2 conversion value															
	n + 3	Input 3 conversion value															
	n + 4	Input 4 conversion value															
	n + 5	Input 5 conversion value															
	n + 6	Input 6 conversion value															
	n + 7	Input 7 conversion value															
	n + 8	Input 8 conversion value															
	n + 9	Alarm Flags								Disconnection detection							
										Input 8	Input 7	Input 6	Input 5	Input 4	Input 3	Input 2	Input 1

Note For the CIO word addresses, n = CIO 2000 + (unit number × 10).

Set Values and Stored Values

Item	Contents	Page
Peak value hold function	0: Not used. 1: Peak value hold used.	114
Conversion value Calculation result	16-bit binary data	109
Disconnection detection	0: No disconnection 1: Disconnection	115
Alarm Flags	Bits 00 to 03: Disconnection detection Bits 04 to 07: Disconnection detection (not used for AD041-V1) Bit 08-10: Not used Bit 11: Mean value processing setting error Bit 15: Operating in adjustment mode (always 0 in normal mode)	106,126 107

Note For the CIO word addresses, n = CIO 2000 + unit number × 10.

The input disconnection detection function can be used when the input signal range is set for 1 to 5 V (4 to 20 mA).

Input signal range	Voltage/current
1 to 5 V	0.3 V max.
4 to 20 mA	1.2 mA max.

Allocation for Adjustment Mode

For adjustment mode, set the operation mode switch on the front panel of the Unit as shown in the following diagram, or set bits 00 to 07 in DM word m+18 to C1. When the Unit is set for adjustment mode, the ADJ indicator on the front panel of the Unit will flash.

Switch color: Brown Switch color: Black

Note The pins are ON when set to the right and OFF when set to the left.

The allocation of CIO words and bits is shown in the following table.

I/O	Word	Bits															
		15	14	13	12	11	10	9	8	7	6	5	4	3	2	1	0
Output (CPU to Unit)	n	Not used.								Inputs to be adjusted							
										2 (fixed)				1 to 8 (1 to 4) (See note 1.)			
	n + 1	Not used.								Not used.		Clr	Set	Up	Down	Gain	Off-set
	n + 2	Not used.															
	n + 3	Not used.															
	n + 4	Not used.															
	n + 5	Not used.															
	n + 6	Not used.															
	n + 7	Not used.															
Input (Unit to CPU)	n + 8	Conversion value at time of adjustment															
		16^3				16^2				16^1				16^0			
	n + 9	Alarm Flags								Disconnection detection (See note 2.)				Not used.			
										Input 8	Input 7	Input 6	Input 5	Input 4	Input 3	Input 2	Input 1

Note 1. Use settings 1 to 4 for the CJ1W-AD041-V1.

2. With the CJ1W-AD041-V1, bits 04 to 07 in word n+9 (disconnection detection) are not used.

Set Values and Stored Values

Refer to *3-7-1 Adjustment Mode Operational Flow* for further details.

Item	Contents
Input to be adjusted	Sets input to be adjusted. Leftmost digit: 2 (fixed) Rightmost digit: 1 to 8 (1 to 4 for CJ1W-AD041-V1)
Offset (Offset Bit)	When ON, adjusts offset error.
Gain (Gain Bit)	When ON, adjusts gain error.
Down (Down Bit)	Decrements the adjustment value while ON.
Up (Up Bit)	Increments the adjustment value while ON.
Set (Set Bit)	Sets adjusted value and writes to EEPROM.
Clr (Clear Bit)	Clears adjusted value. (Returns to default status)
Conversion value for adjustment	The conversion value for adjustment is stored as 16 bits of binary data.
Disconnection detection	0: No disconnection 1: Disconnection
Alarm Flags	Bit 12: Input value is outside adjustment limits (in adjustment mode) Bit 13: Input number setting error (in adjustment mode) Bit 14: EEPROM write error (in adjustment mode) Bit 15: Operating in adjustment mode (always 1 in adjustment mode)

Note For the CIO word addresses, n = CIO 2000 + (unit number × 10).

The input disconnection detection function can be used when the input signal range is set for 1 to 5 V (4 to 20 mA).

Input signal range	Voltage/current
1 to 5 V	0.3 V max.
4 to 20 mA	1.2 mA max.

3-6 Analog Input Functions and Operating Procedures

3-6-1 Input Settings and Conversion Values

Input Numbers

The Analog Input Unit converts analog inputs specified by input numbers 1 to 8 (1 to 4 for CJ1W-AD041-V1) only. To specify the analog inputs to be used, turn ON from a Programming Device the D(m) bits in the DM Area shown in the following diagram.

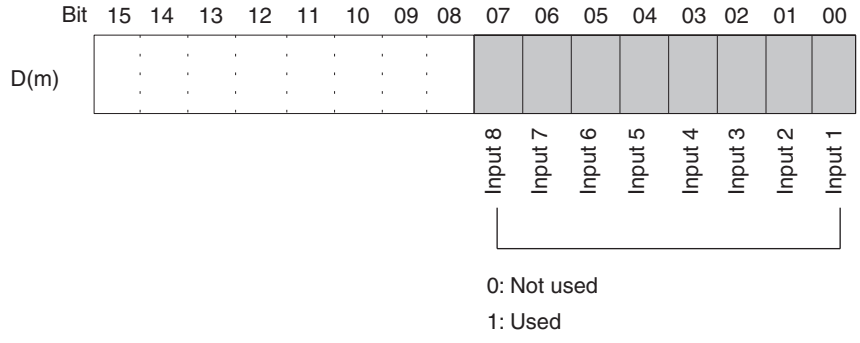

Note There are only four inputs for the CJ1W-AD041-V1.

The analog input sampling interval can be shortened by setting any unused input numbers to 0.

Sampling interval = (1 ms) x (Number of inputs used) (See note.)

Note Use 250 μs instead of 1 ms is set to a conversion time of 250 μs and resolution of 8,000.

The conversion values in words for inputs that have been set to "Not used" will always be "0000."

For the DM word addresses, m = D20000 + (unit number × 100)

Input Signal Range

Any of four types of input signal range (–10 to 10 V, 0 to 10 V, 1 to 5 V, and 4 to 20 mA) can be selected for each of the inputs. To specify the input signal range for each input, set from a Programming Device the D(m+1) bits in the DM Area as shown in the following diagram.

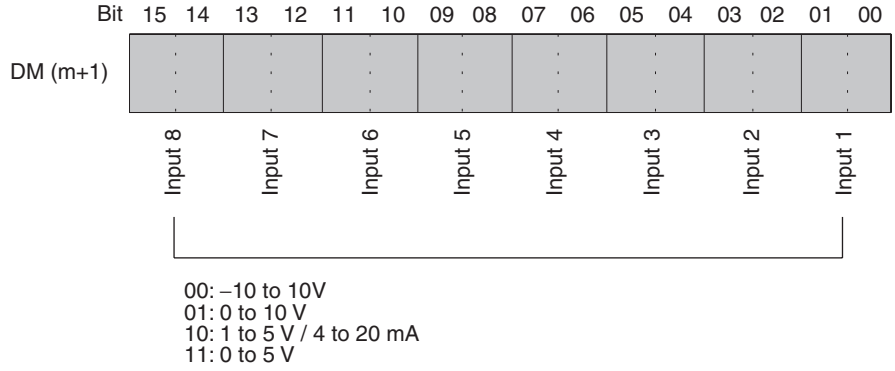

Note There are only four inputs for the CJ1W-AD041-V1.

Note

1. For the DM word addresses, m = D20000 + (unit number × 100)
2. The input signal range of "1 to 5 V" or "4 to 20 mA" is switched using the voltage/current switch.
3. When DM Area settings have been carried out using a Programming Device, be sure to either cycle the power supply to the PLC, or turn ON the Special I/O Unit Restart Bit. The contents of the initial settings in the DM Area will be transferred to the Special I/O Unit when the power is turned ON or the Special I/O Unit Restart Bit is turned ON.

Reading Conversion Values

Analog input conversion values are stored for each input number, in CIO words n+1 to n+8. With the CJ1W-AD041-V1, the values are stored in CIO words n+1 to n+4.

Word	Function	Stored value
n+1	Input 1 conversion value	16-bit binary data
n+2	Input 2 conversion value	
n+3	Input 3 conversion value	
n+4	Input 4 conversion value	
n+5	Input 5 conversion value	
n+6	Input 6 conversion value	
n+7	Input 7 conversion value	
n+8	Input 8 conversion value	

Note For the CIO word addresses, n = CIO 2000 + (unit number × 10).

Use MOV(021) or XFER(070) to read conversion values in the user program.

Example 1

In this example, the conversion data from only one input is read. (The unit number is 0.)

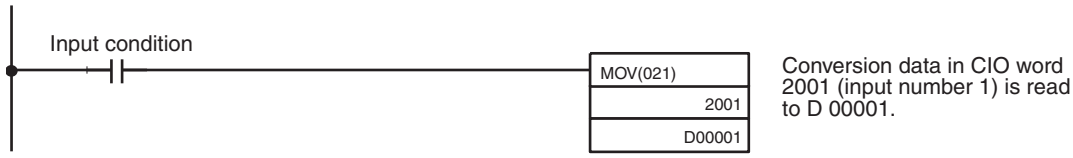

Example 2

In this example, the conversion data from multiple inputs is read. (The unit number is 0.)

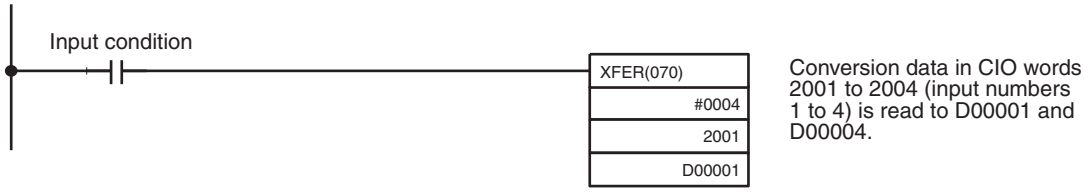

For details regarding conversion value scaling, refer to *Scaling* on page 448.

3-6-2 Conversion Time/Resolution Setting

Bits 08 to 15 in DM word m+18 can be used to set the conversion time and resolution for the CJ1W-AD041-V1 and CJ1W-AD081-V1 to increase speed and accuracy.

This setting applies to analog inputs 1 to 8 (1 to 4 for the CJ1W-AD041-V1), i.e., there are not individual settings for each input.

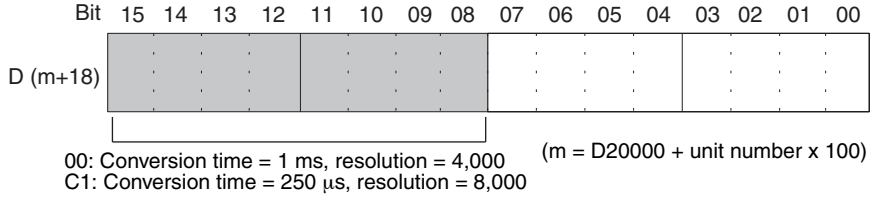

Note When DM Area settings have been carried out using a Programming Device, be sure to either cycle the power supply to the PLC, or turn ON the Special I/O Unit Restart Bit. The contents of the initial settings in the DM Area will be transferred to the Special I/O Unit when the power is turned ON or the Special I/O Unit Restart Bit is turned ON.

3-6-3 Mean Value Processing

The Analog Input Unit can compute the mean value of the conversion values of analog inputs that have been previously sampled. Mean value processing involves an operational mean value in the history buffers, so it has no effect on the data refresh cycle. (The number of history buffers that can be set to use mean value processing is 2, 4, 8, 16, 32, or 64.)

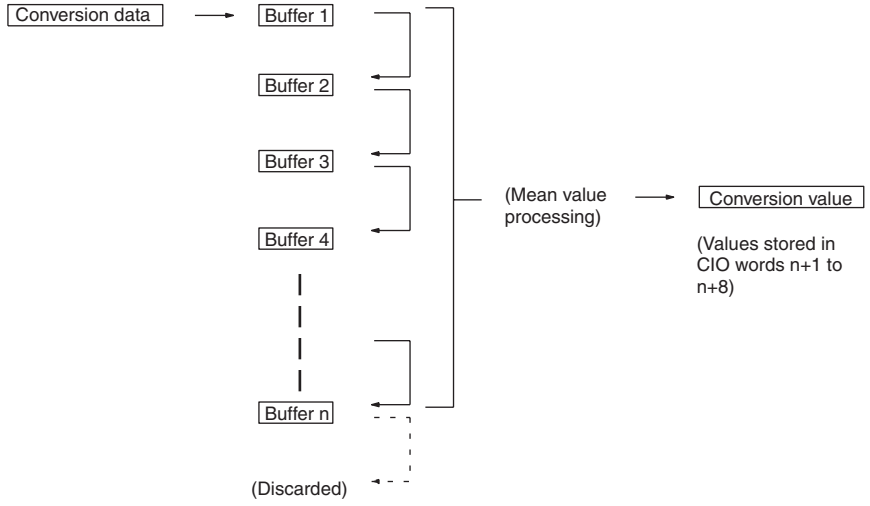

When “n” number of history buffers are being used, the first conversion data will be stored for all “n” number of history buffers immediately data conversion has begun or after a disconnection is restored.

When mean value processing is used together with the peak value hold function, the mean value will be held.

To specify whether or not mean value processing is to be used, and to specify the number of history buffers for mean data processing, use a Programming Device to make the settings in D (m+2) to D (m+9) as shown in the following table. (With the CJ1W-AD041-V1, make the settings in D (m+2) to D (m+5).)

DM Area word	Function	Set value
D (m+2)	Input 1 mean value processing	0000: Mean value processing with 2 buffers 0001: No mean value processing 0002: Mean value processing with 4 buffers 0003: Mean value processing with 8 buffers 0004: Mean value processing with 16 buffers 0005: Mean value processing with 32 buffers 0006: Mean value processing with 64 buffers
D (m+3)	Input 2 mean value processing	
D (m+4)	Input 3 mean value processing	
D (m+5)	Input 4 mean value processing	
D (m+6)	Input 5 mean value processing	
D (m+7)	Input 6 mean value processing	
D (m+8)	Input 7 mean value processing	
D (m+9)	Input 8 mean value processing	

For the DM word addresses, m = D20000 + (unit number × 100)

Note When DM Area settings have been carried out using a Programming Device, be sure to either cycle the power supply to the PLC, or turn ON the Special I/O Unit Restart Bit. The contents of the initial settings in the DM Area will be transferred to the Special I/O Unit when the power is turned ON or the Special I/O Unit Restart Bit is turned ON.

The history buffer moving average is calculated as shown below. (In this example, there are four buffers.)

1,2,3... 1. With the first cycle, data 1 is stored in all the history buffers.

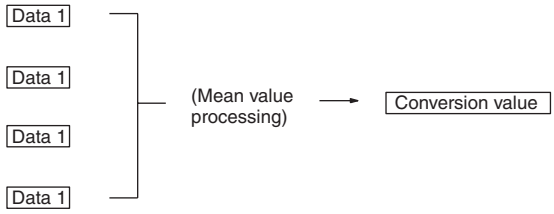

Mean value = (Data 1 + Data 1 + Data 1 + Data 1) ÷ 4

2. With the second cycle, data 2 is stored in the first history buffer.

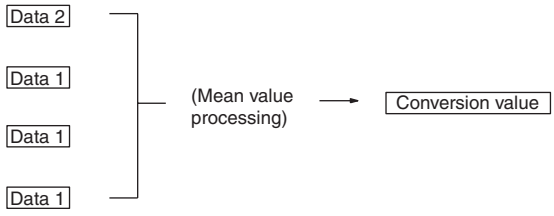

Mean value = (Data 2 + Data 1 + Data 1 + Data 1) ÷ 4

3. With the third cycle, data 3 is stored in the first history buffer.

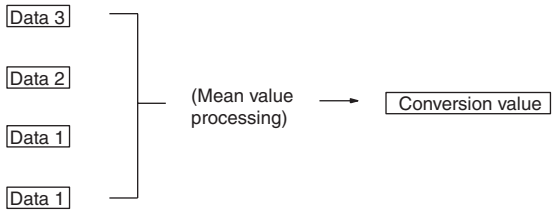

Mean value = (Data 3 + Data 2 + Data 1 + Data 1) ÷ 4

4. With the fourth cycle, data 4 is stored in the first history buffer.

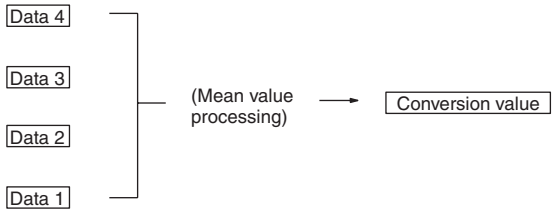

Mean value = (Data 4 + Data 3 + Data 2 + Data 1) ÷ 4

5. With the fifth cycle, data 5 is stored in the first history buffer.

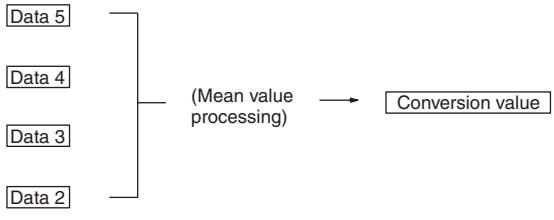

Mean value = (Data 5 + Data 4 + Data 3 + Data 2) ÷ 4

When a disconnection is restored, the mean value processing function begins again from step 1.

Note 1. The default setting for mean value processing in the Analog Input Unit is mean value processing with 2 buffers. The response time for the default

setting is different from when there is no mean processing, as shown in the following diagram.

2. Specify “no mean value processing” to follow conversion of a rapid change in input signals.
3. If the averaging function is used, the delay in the conversion data in comparison to changes in the input signals will be as shown below.

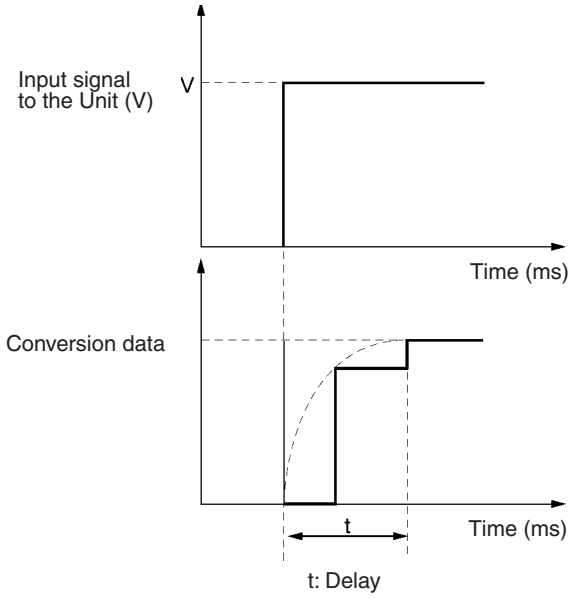

For V = 20 V (–10 to 10 V)

1-ms Conversion Time/4,000 Resolution

Using One Word

t = n + (2 to 3)

Using m Words (1 ≤ m ≤ 8)

No averaging (n = 1) or two averaging buffers (n = 2):
t = n x (m + 2)

n averaging buffers (4 ≤ n ≤ 64):
t = (n – 2) x m + 10.5

250-μs Conversion Time/8,000 Resolution (For version-1 Unit)

Using One Word

t = n + (2 to 3) x 1/4

Using m Words (1 ≤ m ≤ 8)

No averaging (n = 1) or two averaging buffers (n = 2):
t = n x (m + 2) x 1/4

n averaging buffers (4 ≤ n ≤ 64):
t = {(n – 2) x m + 10.5} x 1/4

Response Time at 1-ms Conversion Time/4,000 Resolution

Unit: ms

m	n						
	64	32	16	8	4	2	1
8	506.5	250.5	122.5	58.5	26.5	20	10
7	444.5	220.5	108.5	52.5	24.5	18	9
6	382.5	190.5	94.5	46.5	22.5	16	8
5	320.5	160.5	80.5	40.5	20.5	14	7
4	258.5	130.5	66.5	34.5	18.5	12	6
3	196.5	100.5	52.5	28.5	16.5	10	5
2	134.5	70.5	38.5	22.5	14.5	8	4
1	67	35	19	11	7	5	3

Response Time at 250-μs Conversion Time/8,000 Resolution

Unit: ms

m	n						
	64	32	16	8	4	2	1
8	126.625	62.625	30.625	14.625	6.625	5	2.5
7	111.125	55.125	27.125	13.125	6.125	4.5	2.25
6	95.625	47.625	23.625	11.625	5.625	4	2
5	80.125	40.125	20.125	10.125	5.125	3.5	1.75
4	64.625	32.625	16.625	8.625	4.625	3	1.5
3	49.125	25.125	13.125	7.125	4.125	2.5	1.25
2	33.625	17.625	9.625	5.625	3.625	2	1
1	16.75	8.75	4.75	2.75	1.75	1.25	0.75

Symbols

m: Number of input words used in DM Area
n: Average number of buffers set for the input number for which to find the response time

Calculation Example

The following example calculations are for a resolution of 8,000 with an application using inputs 1 and 8, 64 averaging buffers set for input 1, and no averaging set for input 8.

- Response time for input 1: t = {(64 – 2) × 2 + 10.5} × 1/4 = 34 (ms)
- Response time for input 1: t = 1 × (2 + 2) × 1/4 = 1 (ms)

3-6-4 Peak Value Hold Function

The peak value hold function holds the maximum digital conversion value for every input (including mean value processing). This function can be used with analog input. The following diagram shows how digital conversion values are affected when the peak value hold function is used.

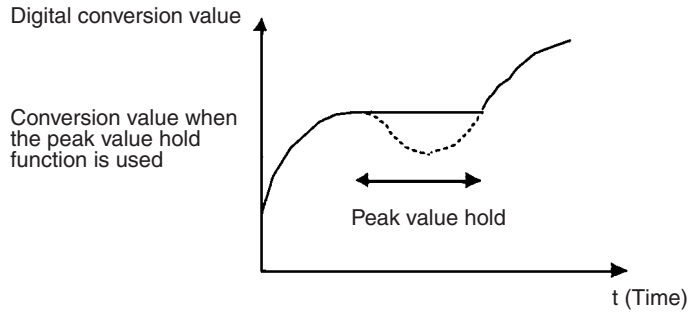

The peak value hold function can be set separately for each input number by turning ON the respective bits (00 to 07) in CIO word n.

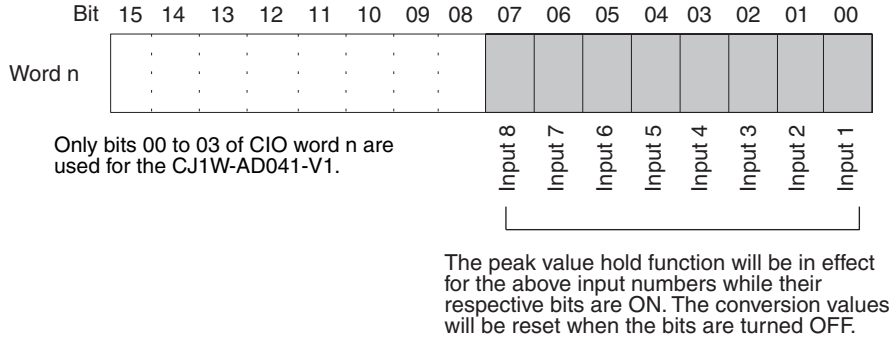

For the CIO word addresses, n = CIO 2000 + (unit number × 10).

In the following example, the peak value hold function is in effect for input number 1, and the unit number is 0.

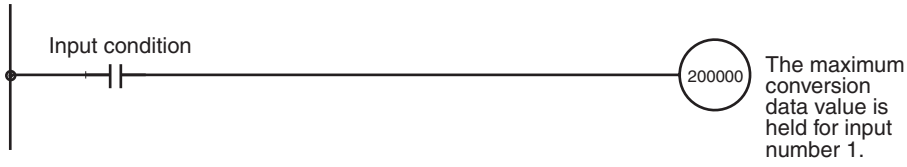

When mean value processing is used together with the peak value hold function, the mean value will be held.

As long as the peak value hold function is in effect, the peak value hold will be held even in the event of a disconnection.

When the load to the CPU Unit is disconnected, the Peak Value Hold Bits (bits 00 to 07 of the word n for CJ1W-AD081-V1, bits 00 to 03 of the word n for CJ1W-AD041-V1) are cleared and the peak value hold function is disabled.

3-6-5 Input Disconnection Detection Function

When an input signal range of 1 to 5 V (4 to 20 mA) is used, input circuit disconnections can be detected. The detection conditions for each of the input signal ranges are shown in the following table. (see note)

Range	Current/voltage
1 to 5 V	Less than 0.3 V
4 to 20 mA	Less than 1.2 mA

Note The current/voltage level will fluctuate according to the offset/gain adjustment.

The input disconnection detection signals for each input number are stored in bits 00 to 07of CIO word n+9. Specify these bits as execution conditions to use disconnection detection in the user's program.

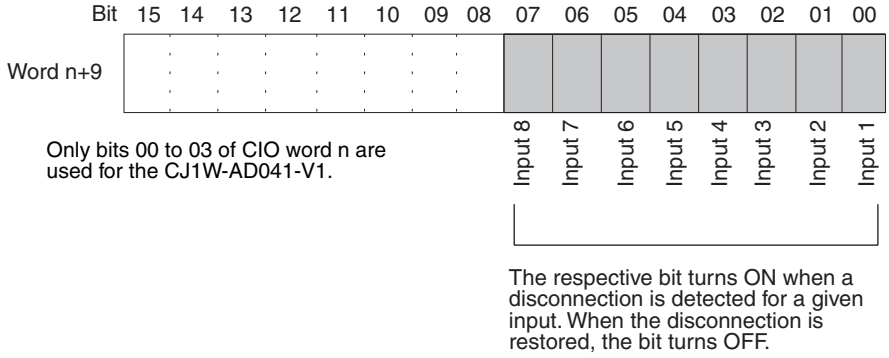

For the CIO word addresses, n = CIO 2000 + (unit number × 10).

The conversion value during a disconnection will be 0000.

In the following example, the conversion value is read only if there is no disconnection at analog input number 1. (The unit number is 0.)

3-7 Adjusting Offset and Gain

3-7-1 Adjustment Mode Operational Flow

The adjustment mode enables the input of the connected devices to be calibrated.

The offset voltage (or current) and gain voltage (or current) at the output device are entered as analog input conversion data 0000 and 0FA0 (07D0 if the range is ±10 V) respectively for a resolution of 4,000.

For example, when using in the range 1 to 5 V, the actual output may be in the range 0.8 to 4.8 V, even though the specifications range for the external device is 1 to 5 V. In this case, when an offset voltage of 0.8 V is output at the external device, the conversion data at the Analog Input Unit for a resolution of 4,000 will be FF38, and if a gain voltage of 4.8 V is output, the conversion data will be 0EDA. The offset/gain adjustment function will, for this example, convert 0.8 V and 4.8 V to 0000 and 0FA0 respectively and not to FF38 and 0EDA, as illustrated in the following table.

Offset/gain voltage at the output device	Conversion data before adjustment	Conversion data after adjustment
0.8 V	FF38 (FE70)	0000 (0000)
4.8 V	0EDA (0DB4)	0FA0 (1F40)

(Values in parentheses are for a resolution of 8,000.)

The following diagram shows the flow of operations when using the adjustment mode for adjusting offset and gain.

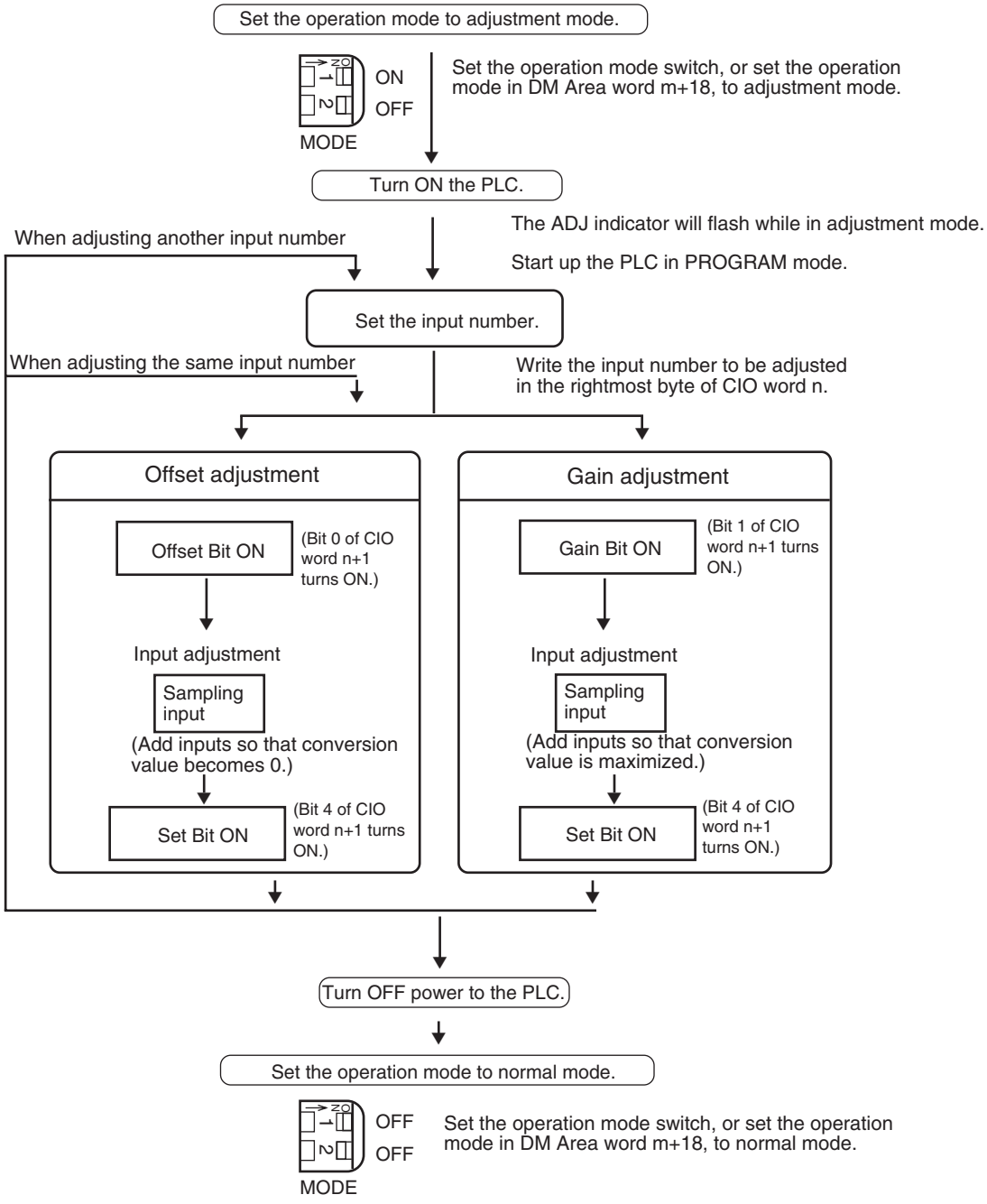

⚠ **Caution** Be sure to turn OFF the power to the PLC before changing the setting of the operation mode switch.

⚠ **Caution** The power must be cycled or the Unit restarted if the operation mode is set in DM word m+18.

⚠ **Caution** Set the PLC to PROGRAM mode when using the Analog Input Unit in adjustment mode. If the PLC is in MONITOR mode or RUN mode, the Analog Input Unit will stop operating, and the input values that existed immediately before this stoppage will be retained.

⚠ **Caution** Always perform adjustments in conjunction with offset and gain adjustments.

Note Input adjustments can be performed more accurately in conjunction with mean value processing.

3-7-2 Input Offset and Gain Adjustment Procedures

Specifying Input Number to be Adjusted

To specify the input number to be adjusted, write the value to the rightmost byte of CIO word n as shown in the following diagram.

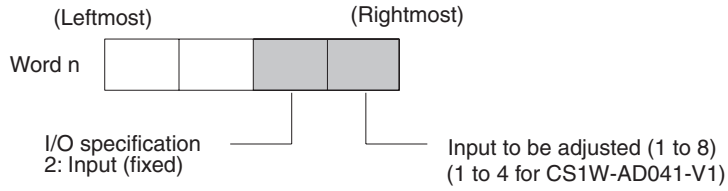

For the CIO word addresses, n = CIO 2000 + (unit number x 10).

The following example uses input number 1 adjustment for illustration. (The unit number is 0.)

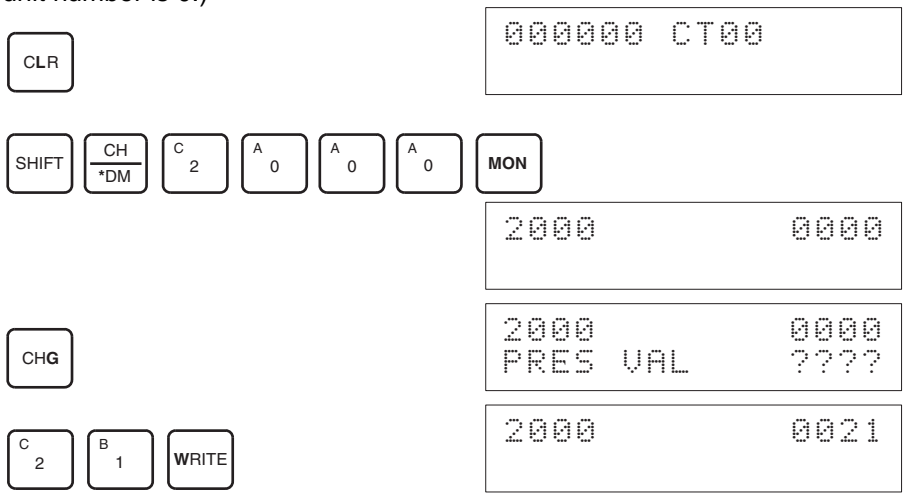

Bits Used for Adjusting Offset and Gain

The CIO word (n+1) bits shown in the following diagram are used for adjusting offset and gain.

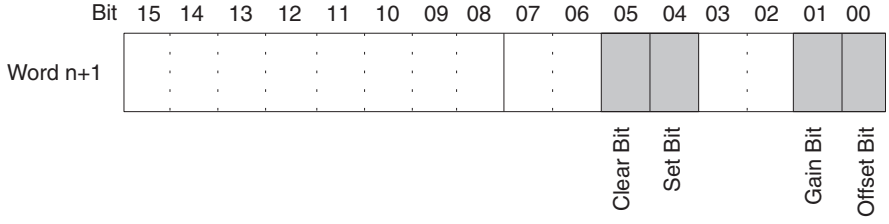

Offset Adjustment

The procedure for adjusting the analog input offset is explained below. As shown in the following diagram, the offset is adjusted by sampling inputs so that the conversion value becomes 0.

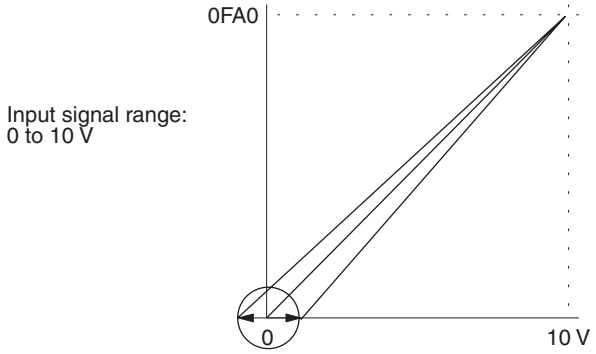

Offset adjustment input range

The following example uses input number 1 adjustment for illustration. (The unit number is 0.)

1,2,3... 1. Turn ON bit 00 (the Offset Bit) of CIO word n+1. (Hold the ON status.)

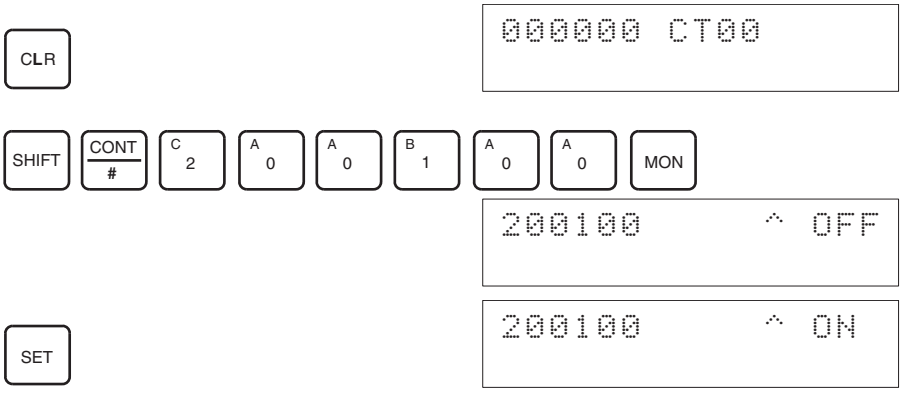

The analog input's digital conversion values while the Offset Bit is ON will be monitored in CIO word n+8.

2. Check whether the input devices are connected.

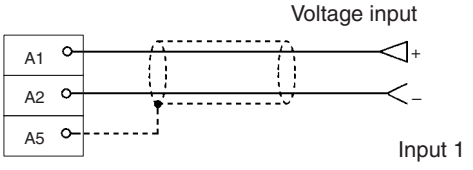

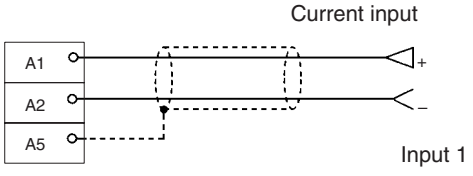

For current input, check that the voltage/ current switch is ON.

3. Input the voltage or current so that the conversion value becomes 0000. The following table shows the offset adjustment voltages and currents to be input according to the input signal range.

Input signal range	Input range	Word (n+8) monitoring value
0 to 10 V	–0.5 to 0.5 V	FF38 to 00C8 (4,000 resolution) FE70 to 0190 (8,000 resolution)
–10 to 10 V	–1.0 to 1.0 V	
1 to 5 V	0.8 to 1.2 V	
0 to 5 V	–0.25 to 0.25 V	
4 to 20 mA	3.2 to 4.8 mA	

4. After inputting the voltage or current so that the conversion value for the analog input terminal is 0000, turn ON bit 04 (the Set Bit) of CIO word n+1, and then turn it OFF again.

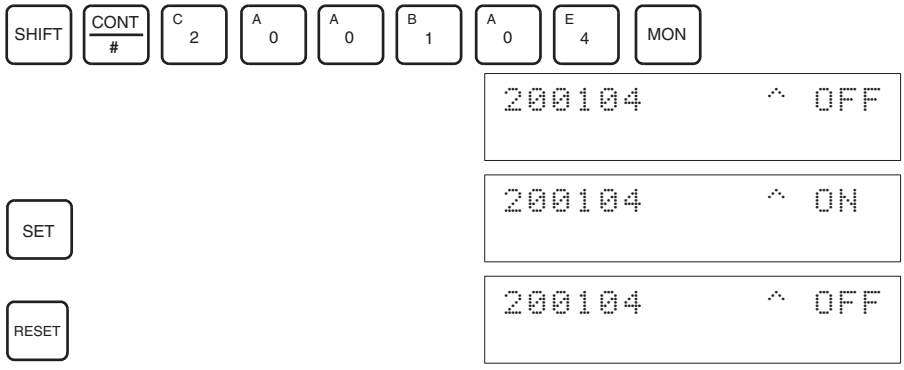

While the Offset Bit is ON, the offset value will be saved to the Unit's EEPROM when the Set Bit turns ON.

5. To finish the offset adjustment, turn OFF bit 00 (the Offset Bit) of CIO word n+1.

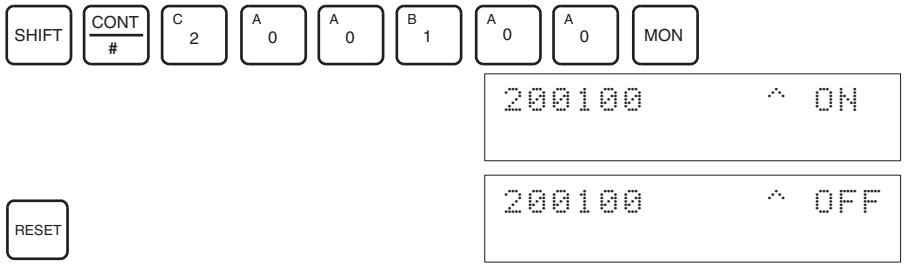

⚠ **Caution** Do not turn OFF the power supply or restart the Unit while the Set Bit is ON (data is being written to the EEPROM). Otherwise, illegal data may be written in the Unit's EEPROM and "EEPROM Errors" may occur when the power supply is turned ON or when the Unit is restarted, causing a malfunction.

⚠ **Caution** When making adjustments, be sure to perform both the offset adjustment and gain adjustment at the same time.

Note

1. The EEPROM can be overwritten 50,000 times.
2. While the Offset Bit or the Gain Bit is ON, the present conversion data will be displayed in word n+8.
   If the Offset Bit or the Gain Bit is OFF, the value immediately prior to turning the bit OFF will be held.

Gain Adjustment

The procedure for adjusting the analog input gain is explained below. As shown in the following diagram, the gain is adjusted by sampling inputs so that the conversion value is maximized.

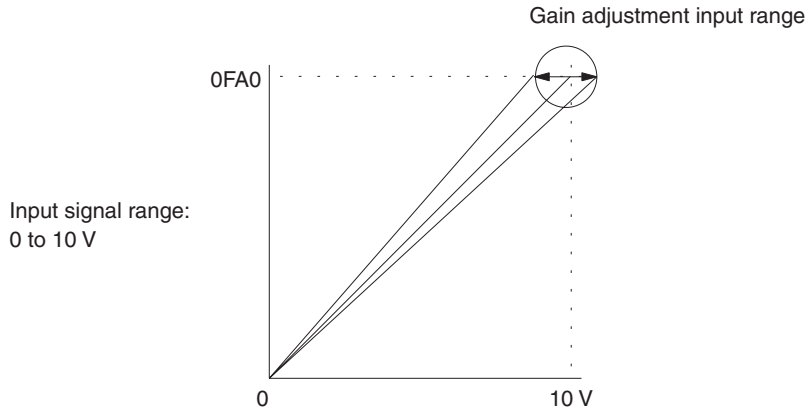

The following example uses input number 1 adjustment for illustration. (The unit number is 0.)

1,2,3... 1. Turn ON bit 01 (the Gain Bit) of CIO word n+1. (Hold the ON status.)

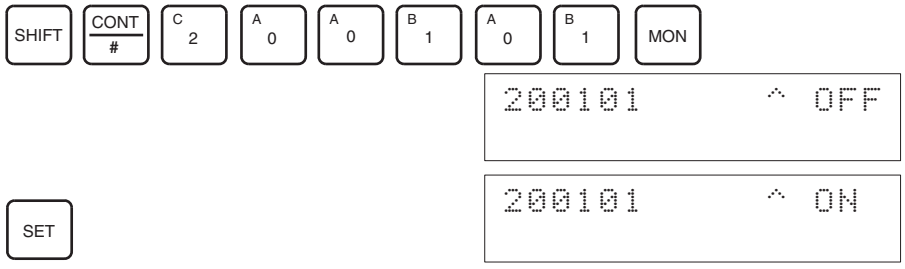

The analog input's digital conversion values while the Gain Bit is ON will be monitored in CIO word n+8.

2. Check whether the input devices are connected.

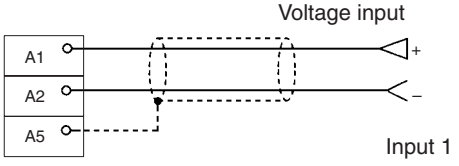

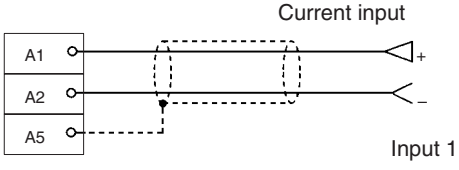

For current input, check that the voltage/ current switch is ON.

3. Input the voltage or current so that the conversion value is maximized (0FA0 or 07D0 at a resolution of 4,000). The following table shows the gain adjustment voltages and currents to be input according to the input signal range.

Input signal range	Input range	Word (n+8) monitoring value
0 to 10 V	9.5 to 10.5 V	0ED8 to 1068 (1DB0 to 20D0)
–10 to 10 V	9.0 to 11.0 V	0708 to 0898 (0E10 to 1130)
1 to 5 V	4.8 to 5.2 V	0ED8 to 1068 (1DB0 to 20D0)
0 to 5 V	4.75 to 5.25 V	0ED8 to 1068 (1DB0 to 20D0)
4 to 20 mA	19.2 to 20.8 mA	0ED8 to 1068 (1DB0 to 20D0)

(Values in parentheses are for a resolution of 8,000.)

4. With the voltage or current having been input so that the conversion value for the Analog Input Unit is maximized (0FA0 or 07D0 for a resolution of 4,000), turn bit 04 (the Set Bit) of CIO word n+1 ON and then OFF again.

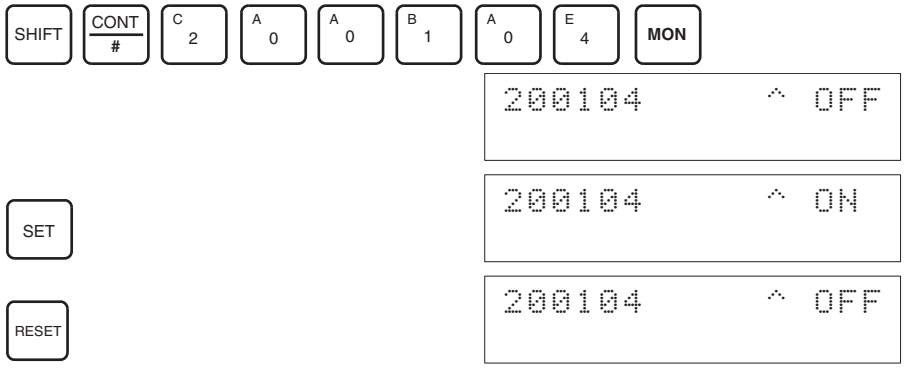

While the Gain Bit is ON, the gain value will be saved to the Unit's EEPROM when the Set Bit turns ON.

5. To finish the gain adjustment, turn OFF bit 01 (the Gain Bit) of CIO word n+1.

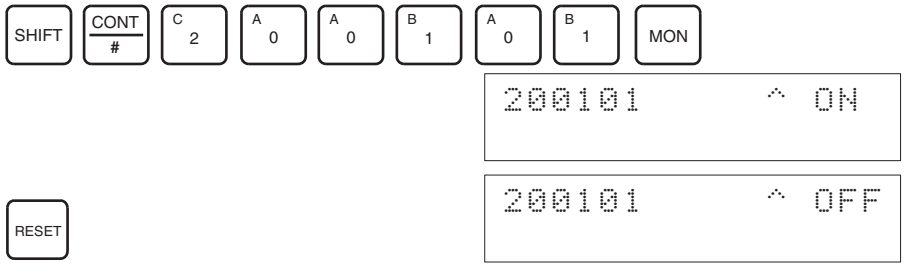

⚠ **Caution** Do not turn OFF the power supply or restart the Unit while the Set Bit is ON (data is being written to the EEPROM). Otherwise, illegal data may be written in the Unit's EEPROM and "EEPROM Errors" may occur when the power supply is turned ON or when the Unit is restarted, causing a malfunction.

⚠ **Caution** When making adjustments, be sure to perform both the offset adjustment and gain adjustment at the same time.

Note

1. The EEPROM can be overwritten 50,000 times.
2. While the Offset Bit or the Gain Bit is ON, the present conversion data will be displayed in word n+8.
   If the Offset Bit or the Gain Bit is OFF, the value immediately prior to turning the bit OFF will be held.

Clearing Offset and Gain Adjusted Values

Follow the procedure outlined below to return the offset and gain adjusted values to their default settings.

The following example uses input number 1 adjustment for illustration. (The unit number is 0.)

1,2,3...

1. Turn ON bit 05 (the Clear Bit) of CIO word n+1. (Hold the ON status.) Regardless of the input value, 0000 will be monitored in CIO word n+8.

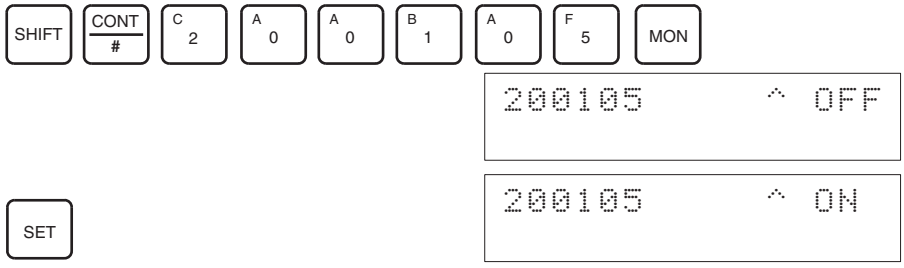

2. Turn bit 04 of CIO word n+1 ON and then OFF again.

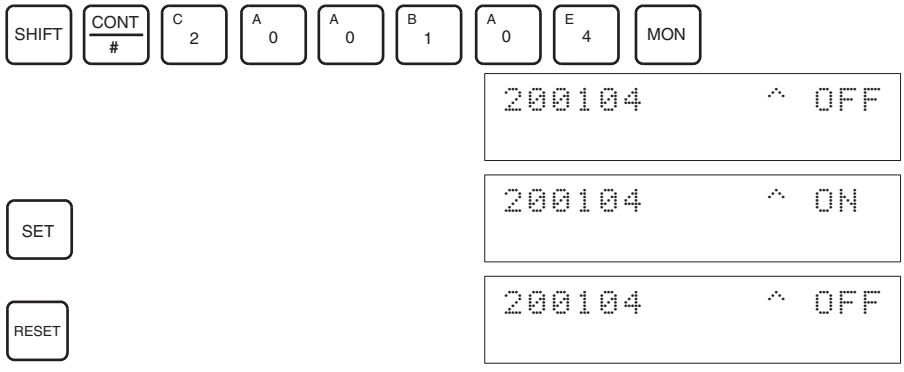

While the Clear Bit is ON, the adjusted value will be cleared and reset to the default offset and gain values when the Set Bit turns ON.

3. To finish the clearing of adjusted values, turn OFF bit 05 (the Clear Bit) of CIO word n+1.

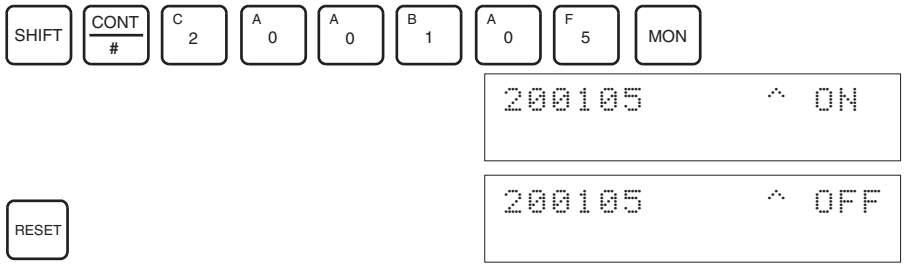

⚠ **Caution** Do not turn OFF the power supply or restart the Unit while the Set Bit is ON (data is being written to the EEPROM). Otherwise, illegal data may be written in the Unit's EEPROM and "EEPROM Errors" may occur when the power supply is turned ON or when the Unit is restarted, causing a malfunction.

Note The EEPROM can be overwritten 50,000 times.

3-8 Handling Errors and Alarms

3-8-1 Indicators and Error Flowchart

Indicators

If an alarm or error occurs in the Analog Input Unit, the ERC or ERH indicators on the front panel of the Unit will light.

Front panel of Unit

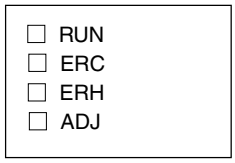

LED	Meaning	Indicator	Operating status
RUN (green)	Operating	Lit	Operating in normal mode.
		Not lit	Unit has stopped exchanging data with the CPU Unit.
ERC (red)	Error detected by Unit	Lit	Alarm has occurred (such as disconnection detection) or initial settings are incorrect.
		Not lit	Operating normally.
ERH (red)	Error in the CPU Unit	Lit	Error has occurred during data exchange with the CPU Unit.
		Not lit	Operating normally.
ADJ (yellow)	Adjusting	Flashing	Operating in offset/gain adjustment mode.
		Not lit	Other than the above.

Troubleshooting Procedure

Use the following procedure for troubleshooting Analog Input Unit errors.

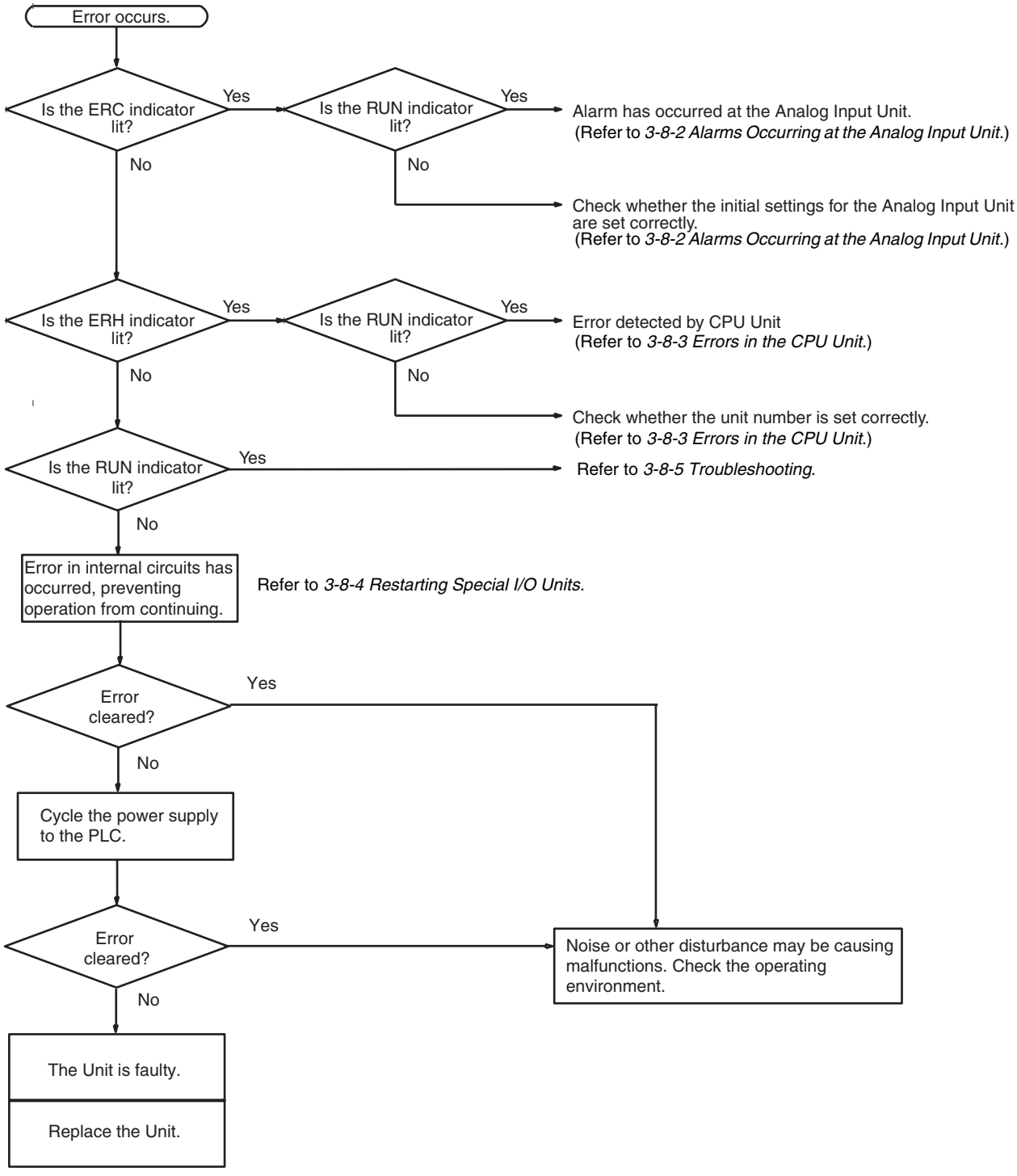

3-8-2 Alarms Occurring at the Analog Input Unit

The ERC indicator will light when the Analog Input Unit detects an alarm. The alarm flags in bits 08 to 15 of CIO word n+9 will turn ON.

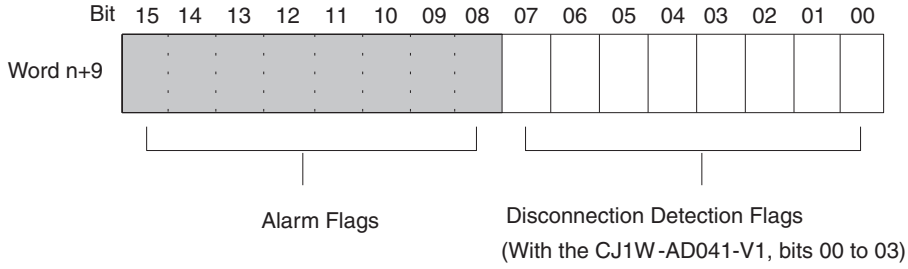

ERC and RUN Indicators: Lit

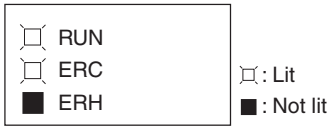

The ERC and RUN indicators will be lit if an error occurs while the Unit is operating normally. The following alarm flags will turn ON in CIO word n+9. These alarm flags will turn OFF automatically when the error is cleared.

Word n + 9	Alarm flag	Error contents	Input status	Countermeasure
Bits 00 to 07 (See note 1.)	Disconnection Detection	A disconnection was detected. (See note 2.)	Conversion data becomes 0000.	Check the rightmost byte of CIO word n+9. The inputs for bits that are ON may be disconnected. Restore any disconnected inputs.
Bit 14	(Adjustment mode) EEPROM Writing Error	An EEPROM writing error has occurred while in adjustment mode.	Holds the values immediately prior to the error. No data is changed.	Turn the Set Bit OFF, ON, and OFF again. If the error persists even after the reset, replace the Analog Input Unit.

Note

1. With the CJ1W-AD041-V1, the Disconnection Detection Flags are stored in bits 00 to 03. Bits 04 to 07 are not used (always OFF).
2. Disconnection detection operates for input numbers used with a range of 1 to 5 V (4 to 20 mA).

ERC Indicator and RUN Indicator: Lit, ADJ Indicator: Flashing

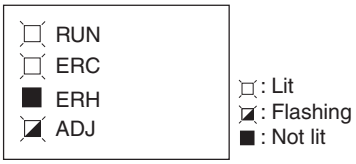

This alarm will occur in the case of incorrect operation while in the adjustment mode. In adjustment mode, the Adjustment Mode ON Flag will turn ON in bit 15 of CIO word n+9.

Word n + 9	Alarm flag	Error contents	Input status	Countermeasure
Bit 12	(Adjustment mode) Input Value Adjustment Range Exceeded	In adjustment mode, offset or gain cannot be adjusted because input value is out of the permissible range for adjustment.	Conversion data corresponding to the input signal is monitored in word n+8.	If making the adjustment by means of a connected input device, first adjust the input device before adjusting the Analog Input Unit.
Bit 13	(Adjustment mode) Input Number Setting Error	In adjustment mode, adjustment cannot be performed because the specified input number is not set for use or because the wrong input number is specified.	Holds the values immediately prior to the error. No data is changed.	Check whether the word n input number to be adjusted is set from 21 to 28 (21 to 24 for CJ1W-AD041-V1.) Check whether the input number to be adjusted is set for use by means of the DM setting.
Bit 15 only ON	(Adjustment Mode) PLC Error (See note 1.)	The PLC is in either MONITOR or RUN mode while the Analog Input Unit is operating in adjustment mode.	Holds the values immediately prior to the error. No data is changed.	Switch the front panel DIP switch pin to OFF. Restart the Unit in normal mode. (See note 2.)

Note

1. When a PLC error occurs in the adjustment mode, the Unit will stop operating. (The input values immediately prior to the error are held.)
2. The operating mode can be set either with the DIP switch or with bits 00 to 07 of D (m+18).

ERC Indicator: Lit, RUN Indicator: Not Lit

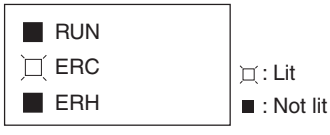

The ERC indicator will be lit when the initial settings for the Analog Input Unit are not set correctly. The following alarm flags will turn ON in CIO word n+9. These alarm flags will turn OFF when the error is cleared and the Unit is restarted, or the Special I/O Unit Restart Bit is turned ON and then OFF again.

Word n + 9	Alarm flag	Error contents	Input status	Countermeasure
Bit 11	Mean Value Processing Setting Error	The wrong number of samplings has been specified for mean processing.	Conversion does not start and data becomes 0000.	Specify a number from 0000 to 0006.

3-8-3 Errors in the CPU Unit

The ERH indicator will light if an error occurs in the CPU Unit or I/O bus and I/O refreshing with the Special I/O Units is not performed correctly, preventing the Analog Input Unit from operating.

ERH and RUN Indicators: Lit

The ERH and RUN indicators will be lit if an error occurs in the I/O bus causing a WDT (watchdog timer) error in the CPU Unit, resulting in incorrect I/O refresh with the Analog Input Unit.

Turn ON the power supply again or restart the system.
For further details, refer to *CJ-series CJ1G-CPU□□, CJ1G/H-CPU□□H Programmable Controllers Operation Manual* (W393).

Error	Error contents	Input status
I/O bus error	Error has occurred during data exchange with the CPU Unit.	Conversion data becomes 0000.
CPU Unit monitoring error (see note)	No response from CPU Unit during fixed period.	Maintains the condition existing before the error.
CPU Unit WDT error	Error has been generated in CPU Unit.	Changes to undefined state.

ERH Indicator: Lit, RUN Indicator: Not Lit

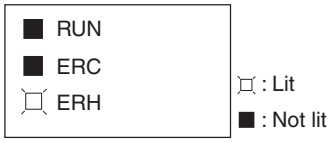

The unit number for the Analog Input Unit has not been set correctly.

Error	Error contents	Input status
Duplicate Unit Number	The same unit number has been assigned to more than one Unit or the unit number was set to a value other than 00 to 95.	Conversion does not start and data becomes 0000.
Special I/O Unit Setting Error	The Special I/O Units registered in the I/O table are different from the ones actually mounted.	

3-8-4 Restarting Special I/O Units

To restart the Analog Input Unit after changing the contents of the DM Area or correcting an error, cycle the power to the PLC or turn ON the Special I/O Unit Restart Bit.

Special I/O Unit Restart Bits

Bits	Functions	
A50200	Unit #0 Restart Bit	Turning the Restart Bit for any Unit ON and then OFF again restarts that Unit.
A50201	Unit #1 Restart Bit	
to	to	
A50215	Unit #15 Restart Bit	
A50300	Unit #16 Restart Bit	
to	to	
A50715	Unit #95 Restart Bit	

The previous conversion data will be held while the Unit is being restarted.

Note If the error is not cleared even after turning the Special I/O Unit Restart Bit ON and then OFF again, then replace the Unit.

3-8-5 Troubleshooting

The following tables explain the probable causes of troubles that may occur, and the countermeasures for dealing with them.

Conversion Data Does Not Change

Probable cause	Countermeasure	Page
The input is not set for being used.	Set the input to be used.	108
The peak value hold function is in operation.	Turn OFF the peak value hold function if it is not required.	114
The input device is not working, the input wiring is wrong, or there is a disconnection.	Using a tester, check to see if the input voltage or current is changing.	---
	Use Unit's alarm flags to check for a disconnection.	126

Value Does Not Change as Intended

Probable cause	Countermeasure	Page
The input device's signal range does not match the input signal range for the relevant input number at the Analog Input Unit.	Check the specifications of the input device, and match the settings for the input signal ranges.	82
The offset and gain are not adjusted.	Adjust the offset and gain.	116
When using the 4 mA to 20 mA range, the voltage/current switch is not turned ON.	Turn ON the voltage/current switch.	96

Conversion Values are Inconsistent

Probable cause	Countermeasure	Page
The input signals are being affected by external noise.	Change the shielded cable connection to the Unit's COM terminal.	100
	Insert a 0.01-μF to 0.1-μF ceramic capacitor or film capacitor between the input's (+) and (–) terminals.	---
	Try increasing the number of mean value processing buffers.	111

SECTION 4
CJ-series Analog Input Units (CJ1W-AD042)

This section explains how to use the CJ1W-AD042 Analog Input Units.

4-1 Specifications 132
4-1-1 Specifications 132
4-1-2 Input Function Block Diagram 134
4-1-3 Inputs Specifications 134
4-2 Operating Procedure 137
4-3 Components and Switch Settings 142
4-3-1 Component Names 142
4-3-2 Indicators 143
4-3-3 Unit Number Switches 143
4-4 Wiring 144
4-4-1 Terminal Arrangement 144
4-4-2 Internal Circuitry 145
4-4-3 Voltage Input Disconnection 146
4-4-4 Input Wiring Example 146
4-4-5 Input Wiring Considerations 148
4-5 Exchanging Data with the CPU Unit 149
4-5-1 Outline of Data Exchange 149
4-5-2 Allocations for Initial Settings Data 151
4-5-3 I/O Refresh Data Allocations 154
4-6 Analog Input Functions and Operating Procedures 157
4-6-1 Input Settings and Conversion Values 157
4-6-2 Conversion Mode Setting 158
4-6-3 Mean Value Processing 160
4-6-4 Input Scaling Function 162
4-6-5 Peak Value Hold Function 164
4-6-6 Input Disconnection Detection Function 165
4-7 Handling Errors and Alarms 166
4-7-1 Indicators and Error Flowchart 166
4-7-2 Alarms Occurring at the Analog Input Unit 168
4-7-3 Errors in the CPU Unit 169
4-7-4 Restarting Special I/O Units 170
4-7-5 Troubleshooting 170

4-1 Specifications

4-1-1 Specifications

Unit model			CJ1W-AD042	
Unit type			CJ-series Special I/O Unit	
Isolation (See note 1.)			Between inputs and PLC signals: Digital isolator (No isolation between input signals.)	
External terminals			18-point detachable terminal block (M3 screws)	
Affect on CPU Unit cycle time			CJ2H CPU Unit	0.05 ms
			CJ2M/CJ3M CPU Unit	0.07 ms
			CJ1 CPU Unit	0.2 ms
Current consumption			520 mA at 5 VDC	
Dimensions (mm) (See note 2.)			31 × 90 × 65 (W × H × D)	
Weight			150 g max.	
General specifications			Conforms to general specifications for SYSMAC CJ Series.	
Mounting position			CJ-series CPU Rack or CJ-series Expansion Rack	
Maximum number of Units			Per CPU Rack or Expansion Rack (See note 3.)	Power Supply Unit / No. of mountable Units
				CJ1W-PA205R CJ1W-PA205C CJ1W-PD025 / CPU Rack: 8 Units/Rack Expansion Rack: 9 Units/Rack
				CJ1W-PA202 / CPU Rack: 4 Units/Rack Expansion Rack: 5 Units/Rack
				CJ1W-PD022 / CPU Rack: 3 Units/Rack Expansion Rack: 3 Units/Rack
Data exchange with CPU Unit (See note 4.)			Special I/O Unit Area in CIO Area (CIO 2000 to CIO 2959): 10 words/Unit Special I/O Unit Area in DM Area (D20000 to D29599): 100 words/Unit	
Inputs specifications	Number of analog inputs		4	
	Input signal range (See note 5.)		1 to 5 V/0 to 10 V/–5 to 5 V/–10 to 10 V/4 to 20 mA (See note 6.)	
	Maximum rated input (See note 7.)		Voltage Input: ±15 V Current Input: ±30 mA	
	Input impedance		Voltage Input: 1 MΩ min. Current Input: 250 Ω (typical)	
	Resolution		1 to 5 V	1/10,000 (full scale)
			0 to 10 V	1/20,000 (full scale)
			–5 to 5 V	1/20,000 (full scale)
			–10 to 10 V	1/40,000(full scale)
			4 to 20 mA	1/10,000(full scale)
	A/D conversion data		16-bit binary data	
	Accuracy	25°C	Voltage Input: ±0.2% of full scale Current Input: ±0.4% of full scale	
		0 to 55°C	Voltage Input: ±0.4% of full scale Current Input: ±0.6% of full scale	
	Conversion period (See note 8.)		20 μs for 1 point, 25 μs for 2 points, 30 μs for 3 points, 35 μs for 4 points	

Input functions	Mean value processing	Stores the last “n” data conversions in the buffer, and stores the mean value of the conversion values. (Number of mean value buffers n = 2, 4, 8, 16, 32, 64,128, 256, or 512)
	Peak value hold	Stores the maximum conversion value (including mean value processing) while the Peak Value Hold Bit is ON.
	Scaling	Setting values in any specified unit within a range of ±32,000 as the upper and lower limits allows A/D conversion to be executed and analog signals to be output using the set values as full scale.
	Input disconnection detection	Detects a disconnection and turns ON the Disconnection Detection Flag. (See note 9.)
	Direct conversion	A/D conversion is performed and the converted value is refreshed immediately when the ANALOG INPUT DIRECT CONVERSION (AIDC) instruction is executed. A CJ2H-CPU□□(-EIP) CPU Unit with unit version 1.1 or later and CJ2M/CJ3M-CPU□□ are required to use direct conversion.

Note

1. Do not apply a voltage higher than 600 VAC to the terminal block when performing withstand voltage test on this Unit. Otherwise, internal elements may deteriorate.
2. Refer to page 441 for Unit dimensions.
3. This is the maximum number of Units that can be mounted to a CJ2H-CPU6□ CPU Unit (no EtherNet/IP). The maximum number of Analog Input Units that can be mounted to one Rack varies depending on the current consumption of the other Units mounted to the Rack.
4. Data exchange methods with the CPU Unit are as follows:

Special I/O Unit Area in CIO Area (CIO 2000 to CIO 2959, CIO 2000.00 to CIO 2959.15)	10 words transferred per Unit	CPU Unit to Analog Input Unit	Peak value hold function
		Analog Input Unit to CPU Unit	• Conversion value • Input disconnection detection • Alarm flags, etc.
Special I/O Unit Area in DM Area (D20000 to D29599)	100 words per Unit transferred at startup or restart	CPU Unit to Analog Input Unit	• Number of analog inputs used • Conversion mode setting • Input signal range setting • Number of mean value buffers • Scaling lower and upper limits

5. Input signal ranges can be set for each input.
6. To use a current input, connect the positive current input terminal and positive voltage input terminal with the enclosed short bar.
7. The Analog Input Unit must be operated according to the input specifications provided here. Operating the Unit outside these specifications will cause the Unit to malfunction.
8. The A/D conversion period is the time it takes for an analog signal to be stored in memory in the Analog Input Unit as converted data after it has been input. With direct conversion, A/D conversion can be performed and the results read within the processing time of the ANALOG INPUT DIRECTION CONVERSION (AIDC) instruction. With cyclic conversion, it takes at least one cycle before the converted data is read by the CPU Unit.
9. Input disconnection detection is supported only when the range is set to 1 to 5 V or 4 to 20 mA. If there is no input signal when the 1 to 5-V or 4 to 20-mA range is set, the Disconnection Detection Flag will turn ON.

4-1-2 Input Function Block Diagram

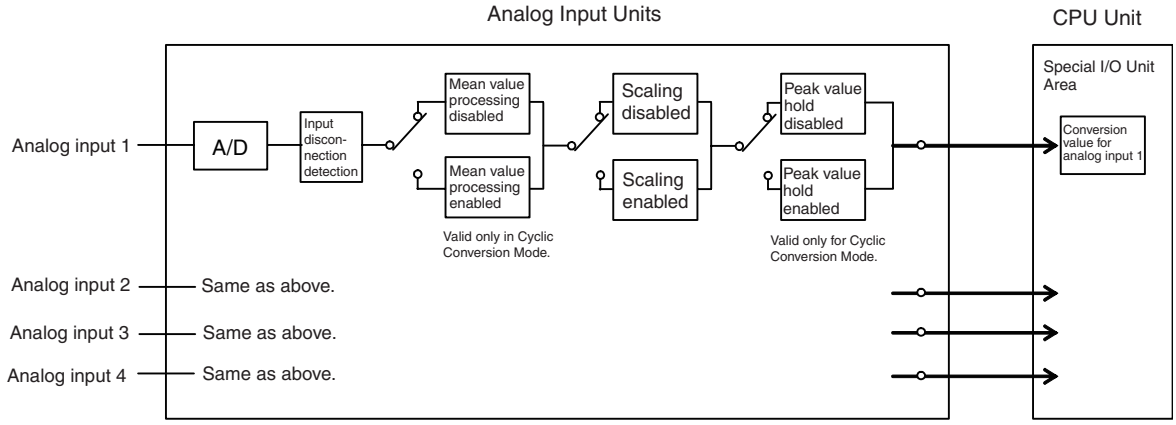

4-1-3 Inputs Specifications

If signals that are outside the specified range provided below are input, the conversion values (16-bit binary data) used will be either the maximum or minimum value.

Range: 1 to 5 V

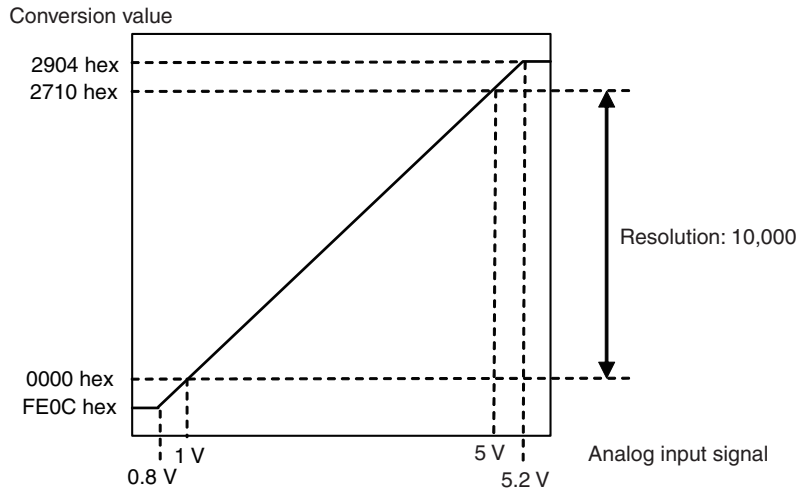

Range: 0 to 10 V

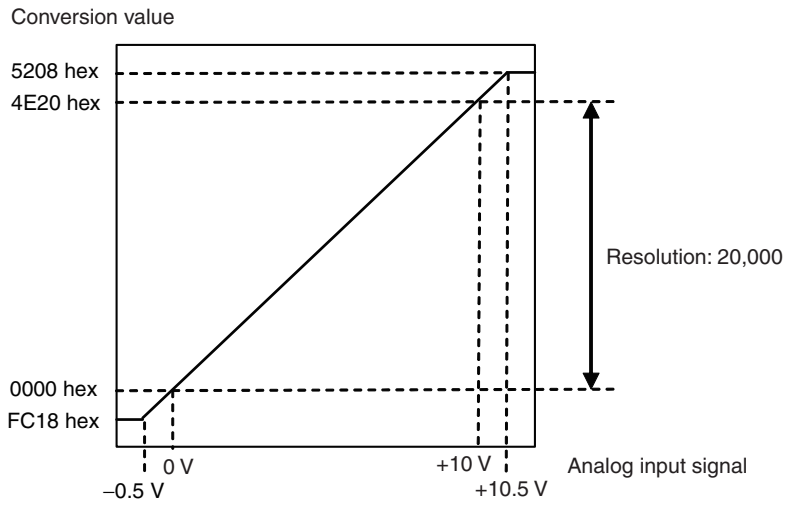

Range: –5 to 5 V

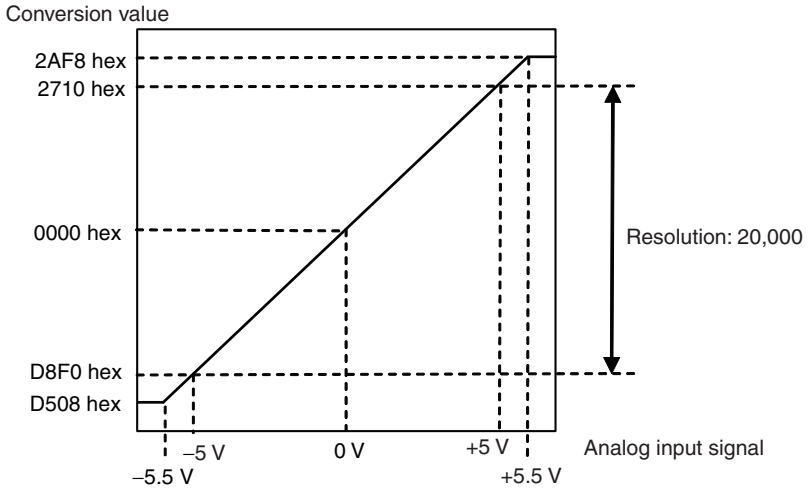

Range: –10 to 10 V

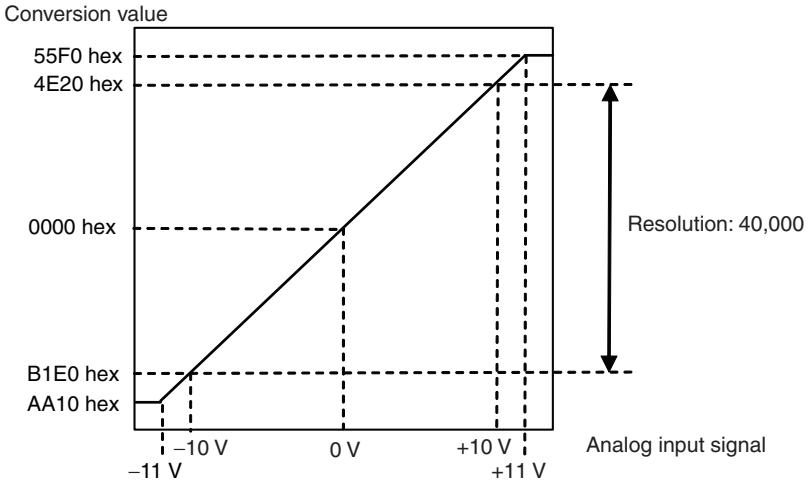

Range: 4 to 20 mA

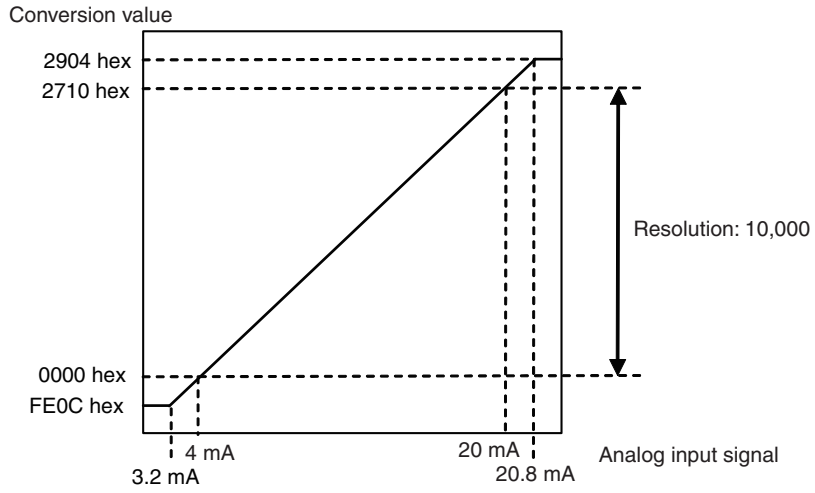

Note The conversion values for a range of –10 to 10 V will be as follows (for a resolution of 40,000):

16-bit binary data	BCD
AA10	–22,000
:	:
FFFF	–1
0000	0
0001	1
:	:
55F0	22,000

4-2 Operating Procedure

Follow the procedure outlined below when using Analog Input Units.

Installation and Settings

1,2,3...

1. Use the unit number switches on the front panel of the Unit to set the unit number.
2. Wire the Unit.
3. Turn ON the power to the PLC.
4. Create the I/O tables.
5. Make the Special I/O Unit settings in the DM Area.
   - Set the number of analog inputs to be used.
   - Set the conversion mode.
   - Set the input signal ranges.
   - Set the number of mean value buffers.
   - Set upper and lower limits for scaling.
6. Turn the power to the PLC OFF and ON, or turn ON the Special I/O Unit Restart Bit.

Operation

1,2,3...

1. Ladder program
   - Read conversion values or write set values by means of MOV(021) and XFER(070).
   - Specify the peak hold function.
   - Obtain disconnection notifications and error codes.

Procedure Examples

An example application procedure is given below.

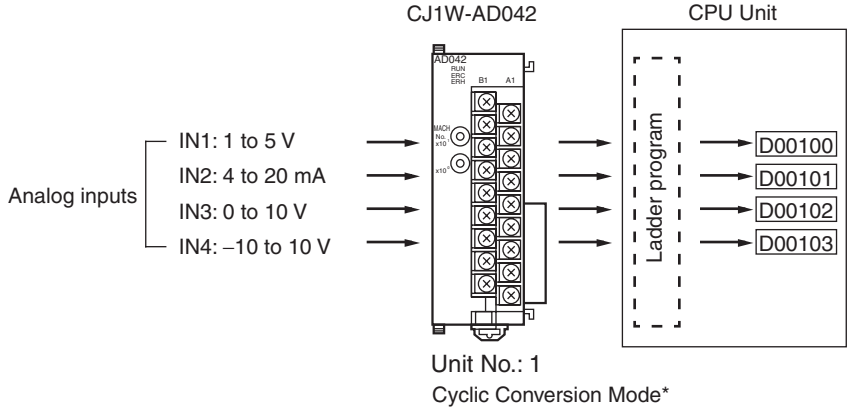

* In Cyclic Conversion Mode, A/D conversion is performed once each conversion cycle, the same way as it is for the CJ1W-AD041-V1/AD081-V1.

Setting the Analog Input Unit

1,2,3... 1. Set the unit number switches. (Refer to page 143.)

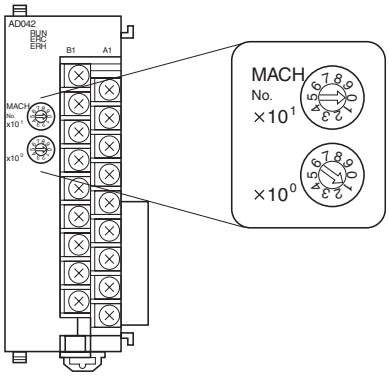

If the unit number is set to 1, words CIO 2010 to CIO 2019 in the Special I/O Unit Area in the CIO Area and words D20100 to D20199 in the Special I/O Unit Area in the DM Area will be allocated to the Analog Input Unit.

2. Connect and wire the Analog Input Unit. (Refer to pages 12, 142, and 146.)

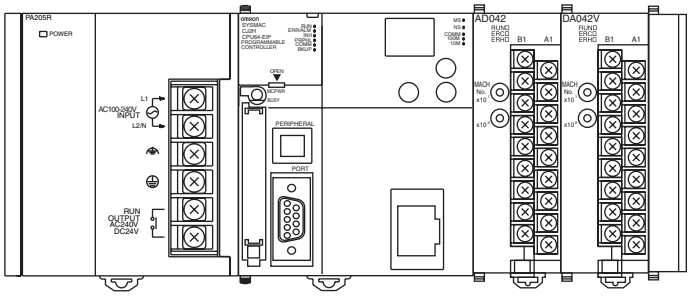

3. Turn ON the power to the PLC.

Creating I/O Tables

After turning ON the power to the PLC, be sure to create the I/O tables.

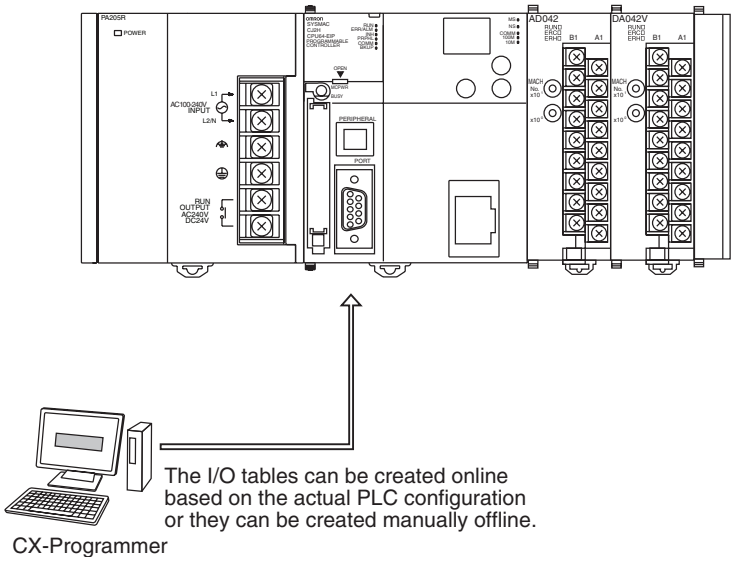

Initial Data Settings

1,2,3... 1. Specify the Special I/O Unit settings in the DM Area. (Refer to page 151.)

Setting Examples

- Unit number: 1
- Cyclic Conversion Mode
- Analog input 1: 1 to 5 V
  Analog input 2: 4 to 20 mA
  Analog input 3: 0 to 10 V
  Analog input 4: –10 to 10 V

a) Set the number of analog inputs to use. (Refer to page 157.)

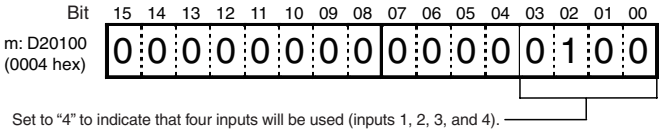

b) Set the conversion mode. (Refer to page 158.)

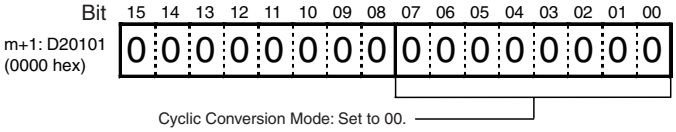

c) Set the input signal ranges. (Refer to page 157.)

1. Input Signal Range Setting for Input 1

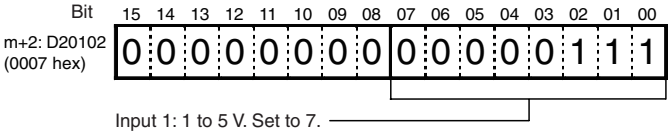

2. Input Signal Range Setting for Input 2

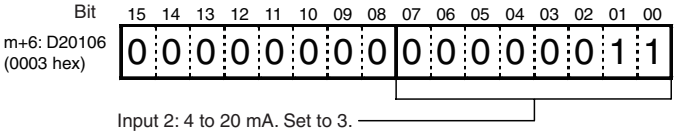

3. Input Signal Range Setting for Input 3

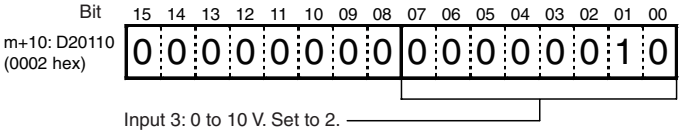

4. Input Signal Range Setting for Input 4

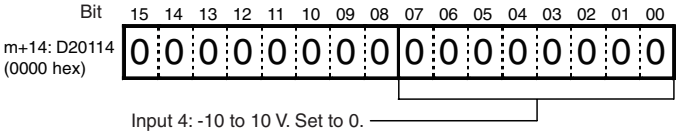

2. Cycle the power to the PLC.

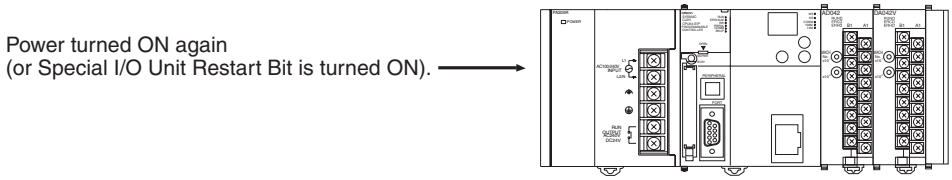

Creating Ladder Programs

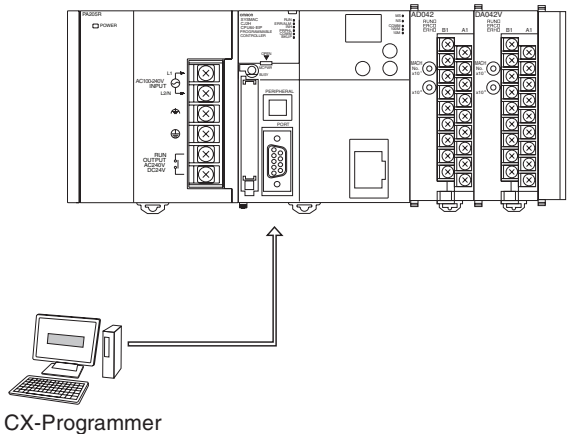

The data that is converted from analog to digital and output to CIO words (n + 1) to (n+ 4) of the Special I/O Unit Area (CIO 2011 to CIO 2014), is stored in the specified addresses D00100 to D00103 as signed binary values 0000 to 0FA0 hex.

■ Analog Inputs

Input number	Input signal range	Input conversion value address (n = CIO 2010) (See note 1.)	Conversion data holding address (See note 2.)
1	1 to 5 V	n+1 = CIO 2011	D00100
2	4 to 20 mA	n+2 = CIO 2012	D00101
3	0 to 10 V	n+3 = CIO 2013	D00102
4	−10 to 10 V	n+4 = CIO 2014	D00103

Note 1. The addresses are determined by the unit number of the Special I/O Unit. (Refer to page 143.)

2. Set as required.

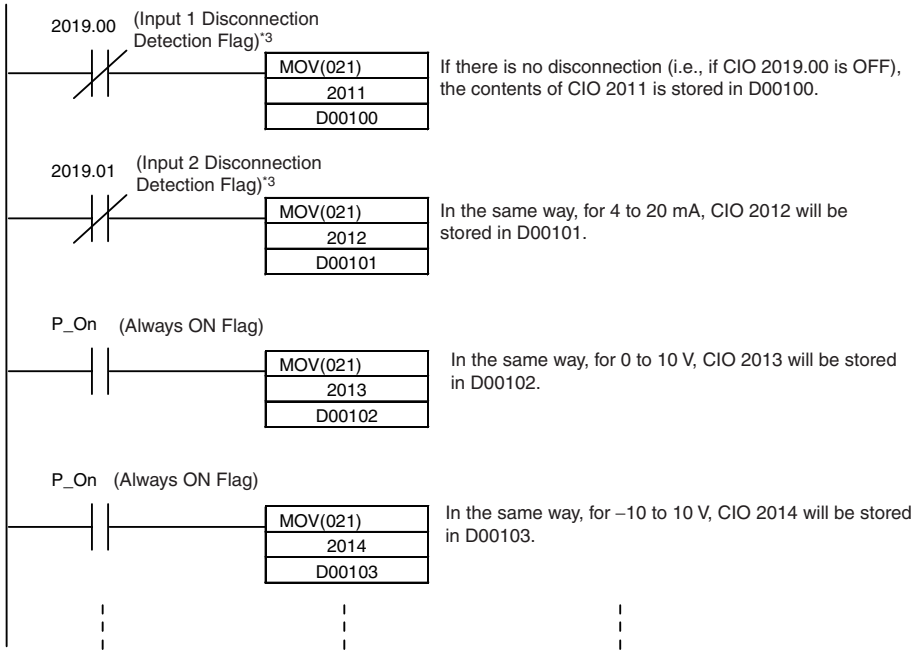

3. Bits 00 to 03 of word (n + 9) are allocated to the Input Disconnection Detection Flags. (Refer to page 165.)

4-3 Components and Switch Settings

4-3-1 Component Names

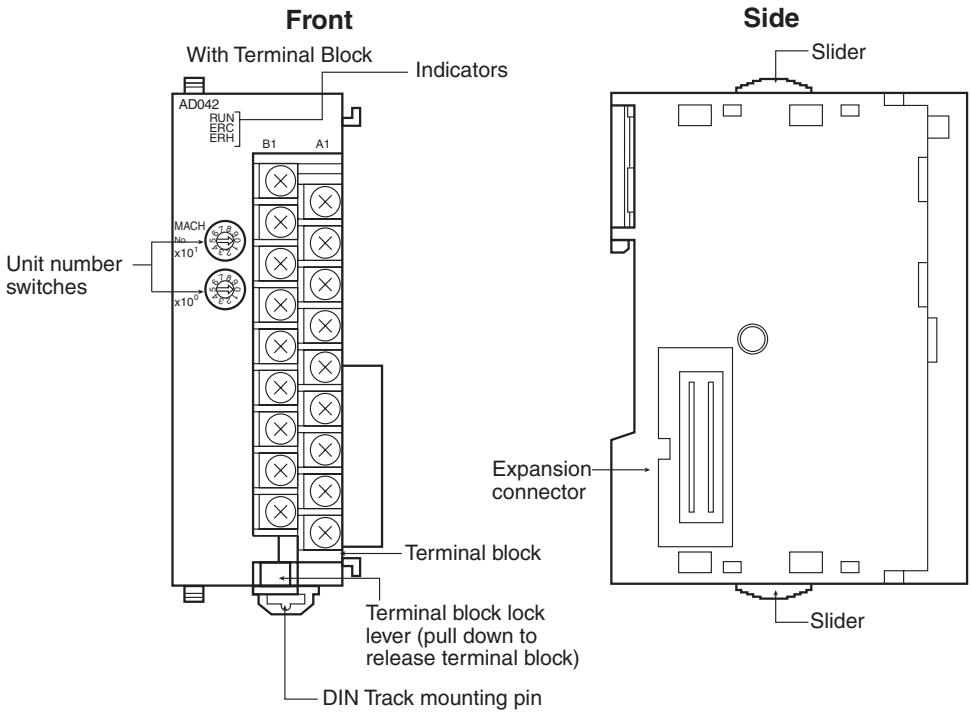

Note 1. The terminal block is attached using a connector. It can be removed by lowering the lever at the bottom of the terminal block.

2. The lever must normally be in the raised position. Confirm this before operation.

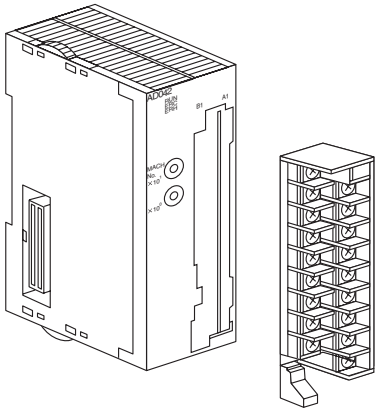

4-3-2 Indicators

The indicators show the operating status of the Unit. The following table shows the meanings of the indicators.

Indicator	Meaning	Indicator status	Operating status
RUN (green)	Operating	Lit	Operation normal.
		Not lit	Unit has stopped exchanging data with the CPU Unit.
ERC (red)	Error detected by Unit	Lit	Alarm has occurred (such as disconnection detection) or initial settings are incorrect.
		Not lit	Operating normally.
ERH (red)	Error in the CPU Unit	Lit	Error has occurred during data exchange with the CPU Unit.
		Not lit	Operating normally.

4-3-3 Unit Number Switches

The CPU Unit and Analog Input Unit exchange data via the Special I/O Unit Areas in the CIO Area and DM Area. The words that are allocated to each Analog Input Unit in the Special I/O Unit Areas in the CIO Area and DM Area are determined by the setting of the unit number switches on the front panel of the Unit.

Unit number switches

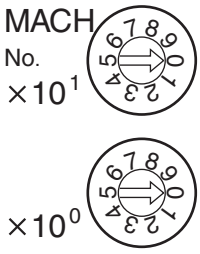

Switch setting	Unit number	Words allocated in Special I/O Unit Area in CIO Area	Words allocated in Special I/O Unit Area in DM Area
0	0	CIO 2000 to CIO 2009	D20000 to D20099
1	1	CIO 2010 to CIO 2019	D20100 to D20199
2	2	CIO 2020 to CIO 2029	D20200 to D20299
3	3	CIO 2030 to CIO 2039	D20300 to D20399
4	4	CIO 2040 to CIO 2049	D20400 to D20499
5	5	CIO 2050 to CIO 2059	D20500 to D20599
6	6	CIO 2060 to CIO 2069	D20600 to D20699
7	7	CIO 2070 to CIO 2079	D20700 to D20799
8	8	CIO 2080 to CIO 2089	D20800 to D20899
9	9	CIO 2090 to CIO 2099	D20900 to D20999
10	10	CIO 2100 to CIO 2109	D21000 to D21099
to	to	to	to
n	n	CIO 2000 + (n × 10) to CIO 2000 + (n × 10) + 9	D20000 + (n × 100) to D20000 + (n × 100) + 99
to	to	to	to
95	95	CIO 2950 to CIO 2959	D29500 to D29599

Note If two or more Special I/O Units are assigned the same unit number, a Unit Number Duplication Error will occur (A401.13 will turn ON) and the PLC will not operate.

4-4 Wiring

⚠ **Caution** Always connect surge suppressors to inductive loads in the system (e.g., magnetic contactors, relays, and solenoids). Always separate devices that generate surge from the Analog Input Unit. Faulty Unit operation may cause unexpected system operation.

If inductive loads are connected to output signals from Relay Contact Output Units, connect a surge suppressor in an AC circuit and a diode in a DC circuit close to the inductive load to absorb the back electromotive force.

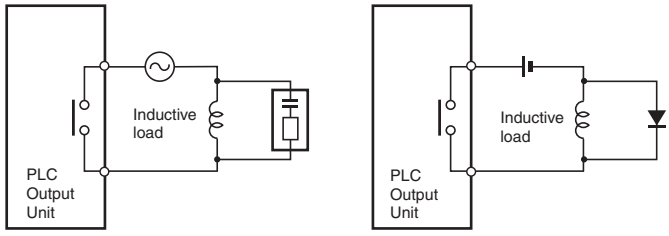

Connect a surge suppressor in an AC circuit and a diode in a DC circuit.

4-4-1 Terminal Arrangement

The signal names corresponding to the connecting terminals are as shown in the following diagram.

Current input 2 (+) ∗	B1	A1	Current input 1 (+) ∗
Voltage input 2 (+)	B2	A2	Voltage input 1 (+)
Input 2 (–)	B3	A3	Input 1 (–)
AG	B4	A4	AG
Current input 4 (+) ∗	B5	A5	Current input 3 (+) ∗
Voltage input 4 (+)	B6	A6	Voltage input 3 (+)
Input 4 (–)	B7	A7	Input 3 (–)
AG	B8	A8	AG
NC	B9	A9	N.C.

* To use a current input, connect the positive current input terminal and positive voltage input terminal with the enclosed short bar.

Note

1. The number of analog inputs that can be used is set in the DM Area.
2. The input signal ranges for individual inputs are set in the DM Area. The input signal range can be set separately for each input.
3. The AG terminals are connected to the 0-V analog circuit in the Unit. Connecting the input line shield can improve noise resistance.
4. Do not make any connections to the NC terminals.

4-4-2 Internal Circuitry

The following diagrams show the internal circuitry of the analog input section.

Input Circuitry

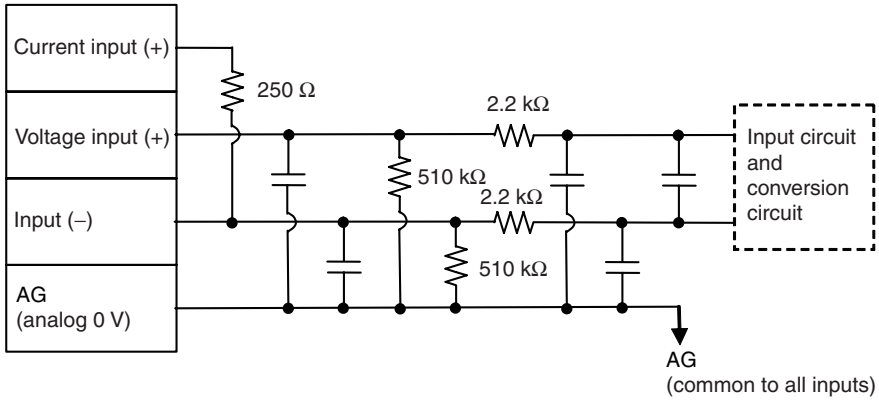

Internal Configuration

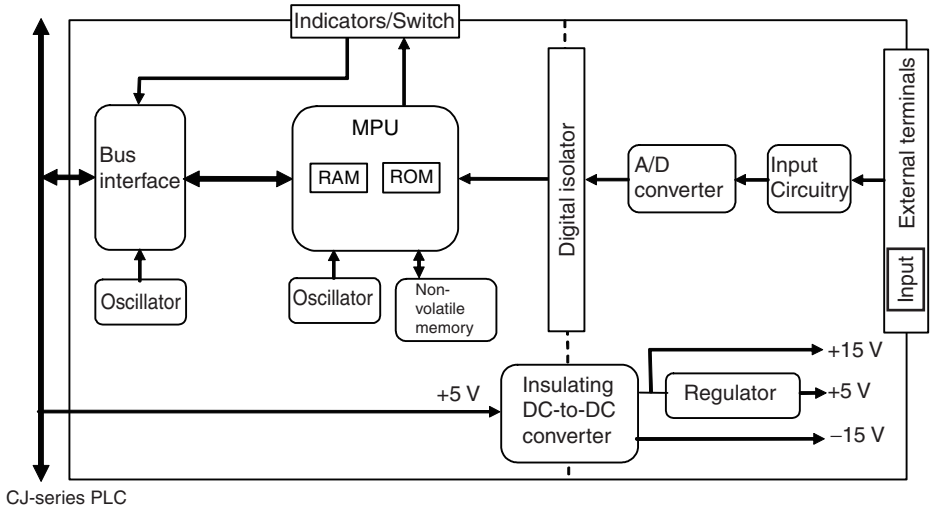

4-4-3 Voltage Input Disconnection

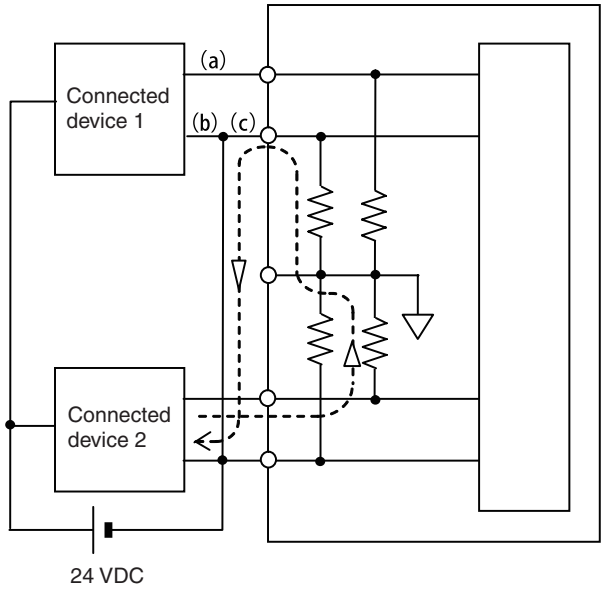

When voltage inputs are used and a disconnection occurs, separate the power supply at the side of the connected devices or use an insulating device (isolator) for each input to avoid the following problems.

When the power supply at the connected devices is shared and section a or b is disconnected, power will flow in the direction of the dotted line and the output voltage of the other connected devices will be reduced to between a third to a half of the voltage. If 1 to 5 V is used and the reduced voltage occurs, disconnection may not be detectable. If section c is disconnected, the power at the negative input terminal will be shared and disconnection will not be detectable.

For current inputs, sharing the power supply between the connected devices will not cause any problems.

4-4-4 Input Wiring Example

■ **Wiring Example for a Voltage Input**

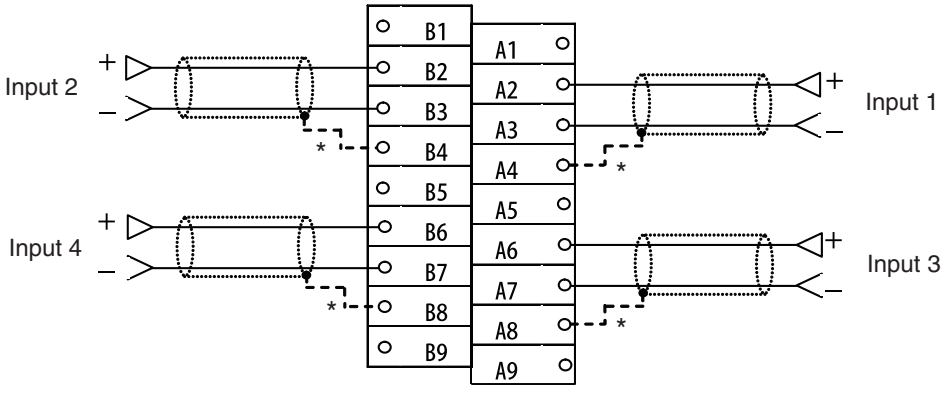

■ **Wiring Example for a Current Input**

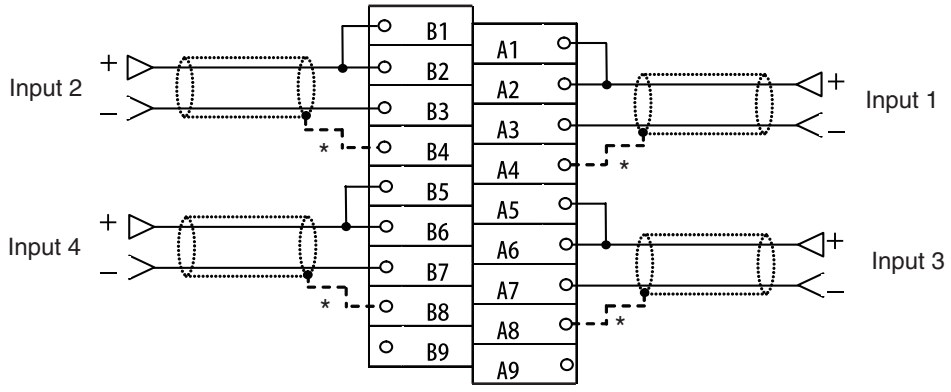

* Connect the positive current input terminal and positive voltage input terminal with the enclosed short bar.

Note Crimp terminals must be used for terminal connections, and the screws must be tightened securely. Use M3 screws and tighten them to a torque of 0.5 N·m.

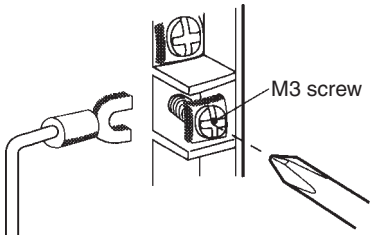

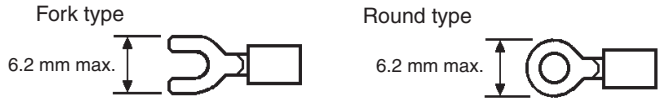

Note

1. Set the number of analog inputs to be used so that unused inputs are set so that they are not used. (Refer to pages 152 and 157.) If an input that is not used is set to be used, the input data for it may be unstable. The input data can be made stable by cross-connecting the voltage input terminals (V+) and (V−). However, if these terminals are connected and the inputs are set for the 1 to 5-V or 4 to 20-mA range, the Disconnection Detection Flag will turn ON.
2. When connecting the shield of the analog input cable* to the Unit's AG terminal, as shown in the above diagram, use a wire that is 30 cm or shorter if possible.
3. Do not connect anything to NC terminals shown in the wiring diagram on page 144.
4. Connect the analog input line shield to the AG terminal on the Analog Input Unit to improve noise resistance.

4-4-5 Input Wiring Considerations

When wiring inputs, apply the following points to avoid noise interference and optimize Analog Input Unit performance.

- Use two-core shielded twisted-pair cables for input connections.
- Route input cables separately from power cables (e.g., AC and three-phase lines), and do not place them in the same duct with power cables.
- If there is noise interference from power lines (if, for example, the power supply is shared with electrical welding devices or electrical discharge machines, or if there is a high-frequency generation source nearby), install a noise filter at the power supply input.

4-5 Exchanging Data with the CPU Unit

4-5-1 Outline of Data Exchange

Data is exchanged between the CPU Unit and the CJ1W-AD042 Analog Input Unit via the Special I/O Unit Area in the CIO Area (for data used to operate the Unit) and the Special I/O Unit Area in the DM Area (for data used for initial settings).

■ I/O Refresh Data

Analog input conversion values, which are used as data for Unit operation, are allocated in the Special I/O Unit Area in the CIO Area of the CPU Unit according to the unit number. These exchanged are updated during I/O refreshing.

■ Initial Settings Data

The Unit's initial settings, such as the number of analog inputs used, the conversion mode, the analog input signal ranges, and the number of mean value buffers, are allocated in the Special I/O Unit Area in the DM Area of the CPU Unit according to the unit number. The settings are exchanged when the power is turned ON or the Unit is restarted.

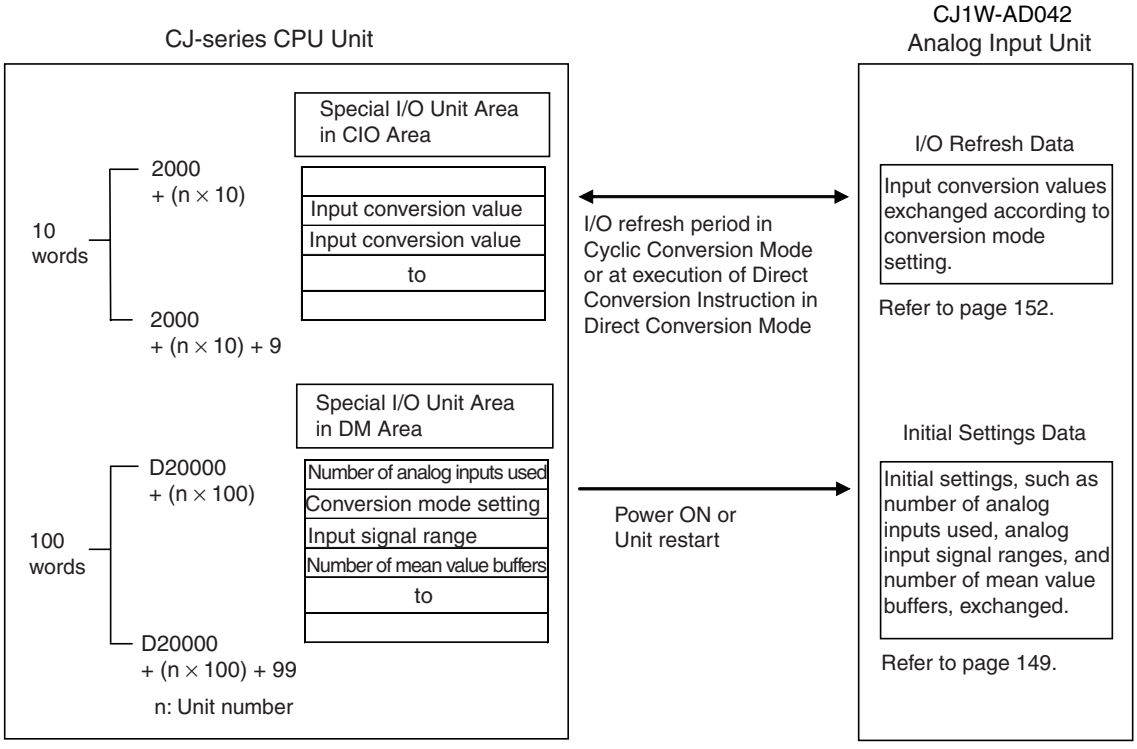

Unit Number Setting

The words in the Special I/O Unit Areas in the CIO Area and DM Area that are allocated to each Analog Input Unit are determined by the unit number switches on the front panel of the Unit.

Unit number switches

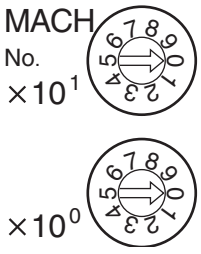

Switch setting	Unit number	Words allocated in Special I/O Unit Area in CIO Area	Words allocated in Special I/O Unit Area in DM Area
0	0	CIO 2000 to CIO 2009	D20000 to D20099
1	1	CIO 2010 to CIO 2019	D20100 to D20199
2	2	CIO 2020 to CIO 2029	D20200 to D20299
3	3	CIO 2030 to CIO 2039	D20300 to D20399
4	4	CIO 2040 to CIO 2049	D20400 to D20499
5	5	CIO 2050 to CIO 2059	D20500 to D20599
6	6	CIO 2060 to CIO 2069	D20600 to D20699
7	7	CIO 2070 to CIO 2079	D20700 to D20799
8	8	CIO 2080 to CIO 2089	D20800 to D20899
9	9	CIO 2090 to CIO 2099	D20900 to D20999
10	10	CIO 2100 to CIO 2109	D21000 to D21099
to	to	to	to
n	n	CIO 2000 + (n × 10) to CIO 2000 + (n × 10) + 9	D20000 + (n × 100) to D20000 + (n × 100) + 99
to	to	to	to
95	95	CIO 2950 to CIO 2959	D29500 to D29599

Note If two or more Special I/O Units are assigned the same unit number, a Unit Number Duplication Error will occur (A401.13 will turn ON) and the PLC will not operate.

Special I/O Unit Restart Bits

To restart the Unit after changing the contents of the DM Area or correcting an error, cycle the power supply to the PLC or turn ON the Special I/O Unit Restart Bit.

■ Special I/O Unit Restart Bits

Bit	Function	
A502.00	Unit No. 0 Restart Bit	Restarts the Unit when turned ON.
A502.01	Unit No. 1 Restart Bit	
to	to	
A502.15	Unit No. 15 Restart Bit	
A503.00	Unit No. 16 Restart Bit	
to	to	
A507.15	Unit No. 95 Restart Bit	

Note Replace the Unit if the error is not cleared even though the power supply is cycled or the Restart Bit is turned ON.

4-5-2 Allocations for Initial Settings Data

DM Area

The initial settings of the Analog Input Unit are set according to the data allocated in the Special I/O Unit Area in the DM Area. Settings, such as the number of analog inputs used, the conversion mode, and the analog input signal ranges, must be set in this area.

CJ-series CPU Unit

Special I/O Unit Area in DM Area

	Words allocated in Special I/O Unit Area in DM Area
Unit 0	D20000 to D20099
Unit 1	D20100 to D20199
Unit 2	D20200 to D20299
Unit 3	D20300 to D20399
Unit 4	D20400 to D20499
Unit 5	D20500 to D20599
Unit 6	D20600 to D20699
Unit 7	D20700 to D20799
Unit 8	D20800 to D20899
Unit 9	D20900 to D20999
Unit 10	D21000 to D21099
to	to
Unit n	D20000 + (n × 100) to D20000 + (n × 100) + 99
to	to
Unit 95	D29500 to D29599

Data is automatically transferred to each unit when the power is turned ON, or when the Special I/O Unit Restart Bit is turned ON.

CJ1W-AD042
Analog Input Unit

Initial Settings Data

D (m)	Number of analog inputs used
D (m+1)	Conversion mode setting
D (m+2) to D (m+5)	Input 1 Input signal range Number of mean value buffers Scaling lower limit Scaling upper limit
D (m+6) to D (m+9)	Input 2 Input signal range Number of mean value buffers Scaling lower limit Scaling upper limit
D (m+10) to D (m+13)	Input 3 Input signal range Number of mean value buffers Scaling lower limit Scaling upper limit
D (m+14) to D (m+17)	Input 4 Input signal range Number of mean value buffers Scaling lower limit Scaling upper limit

m = 20000 + (unit number × 100)

Note

1. The words in the Special I/O Unit Area in the DM Area that are allocated to the Analog Input Unit are determined by the setting of the unit number switches on the front panel of the Unit. (Refer to page 150.)
2. If two or more Special I/O Units are assigned the same unit number, a Unit Number Duplication Error will occur (A401.13 will turn ON) and the PLC will not operate.

Allocations in DM Area

The following table shows the allocation of DM Area words and bits.

DM Area word (See note.)	Bits															
	15	14	13	12	11	10	09	08	07	06	05	04	03	02	01	00
D (m)	Not used. (Settings are ignored.)												Number of analog inputs used			
D (m+1)	Not used. (Settings are ignored.)								Conversion mode setting 00 hex: Cyclic Conversion Mode A5 hex: Direct Conversion Mode							
D (m+2)	Not used. (Settings are ignored.)								Input 1 signal range							
D (m+3)	Number of mean value buffers for input 1															
D (m+4)	Input 1 scaling lower limit															
D (m+5)	Input 1 scaling upper limit															
D (m+6)	Not used. (Settings are ignored.)								Input 2 signal range							
D (m+7)	Number of mean value buffers for input 2															
D (m+8)	Input 2 scaling lower limit															
D (m+9)	Input 2 scaling upper limit															
D (m+10)	Not used. (Settings are ignored.)								Input 3 signal range							
D (m+11)	Number of mean value buffers for input 3															
D (m+12)	Input 3 scaling lower limit															
D (m+13)	Input 3 scaling upper limit															
D (m+14)	Not used. (Settings are ignored.)								Input 4 signal range							
D (m+15)	Number of mean value buffers for input 4															
D (m+16)	Input 4 scaling lower limit															
D (m+17)	Input 4 scaling upper limit															

Note For the DM Area word addresses, m = D20000 + (unit number × 100).

■Set Values and Stored Values

Item	Contents	Page
Number of analog inputs used	0: No inputs used. 1: One input used (input 1 used). 2: Two inputs used (inputs 1 and 2 used). 3: Three inputs used (inputs 1, 2, and 3 used). 4: Four inputs used (inputs 1, 2, 3, and 4 used).	157
Conversion mode setting	00 hex: Cyclic Conversion Mode A5 hex: Direct Conversion Mode (See note 1.)	158
Input signal range	0: –10 to 10 V 2: 0 to 10 V 3: 4 to 20 mA 6: –5 to 5 V 7: 1 to 5 V	157
Numbers of mean value buffers (See note 2.)	0: Mean value processing not used. 1: Mean value processing with 2 buffers 2: Mean value processing with 4 buffers 3: Mean value processing with 8 buffers 4: Mean value processing with 16 buffers 5: Mean value processing with 32 buffers 6: Mean value processing with 64 buffers 7: Mean value processing with 128 buffers 8: Mean value processing with 256 buffers 9: Mean value processing with 512 buffers	160
Scaling settings	Any value other than 0 within range of ±32,000 (8300 hex to 7D00 hex) as long as the upper limit is not equal to the lower limit.	162

Note

1. A CJ2H-CPU□□(-EIP) CPU Unit with unit version 1.1 or later and CJ2M/CJ3M-CPU□□ are required to use direct conversion. Direct conversion is not supported by CJ1 CPU Units.
2. Mean value processing cannot be used in Direct Conversion Mode.

4-5-3 I/O Refresh Data Allocations

I/O refresh data for the Analog Input Unit is exchanged according to the allocations in the Special I/O Unit Area.

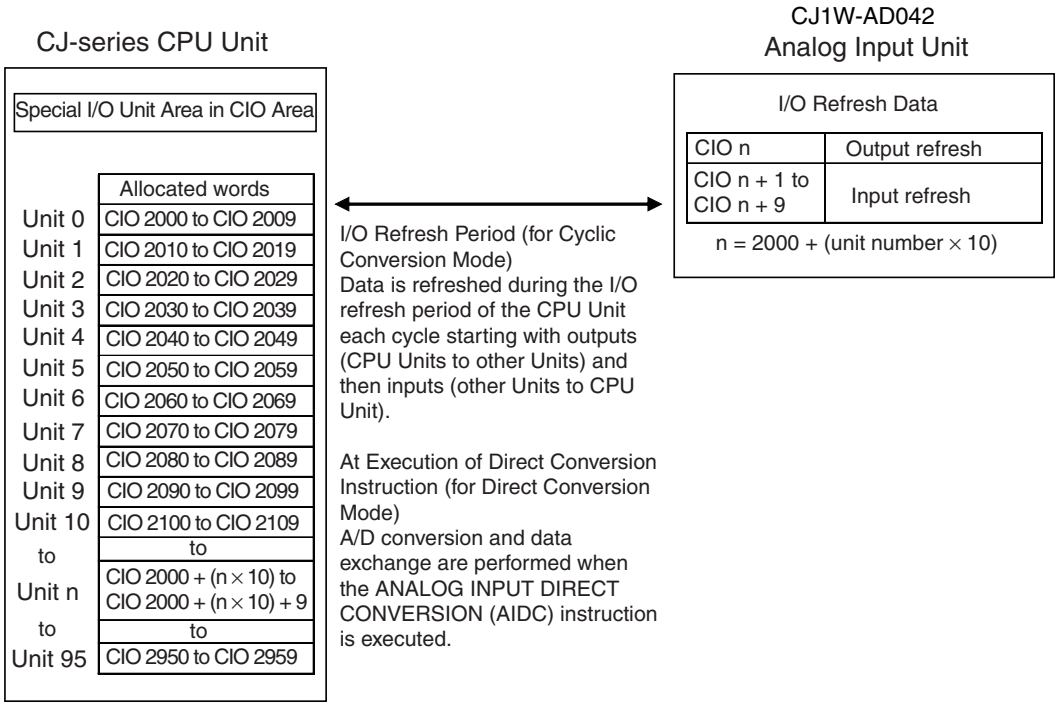

Note

1. The words in the Special I/O Unit Area in the CIO Area that are allocated to the Analog Input Unit are determined by the setting of the unit number switches on the front panel of the Unit. (Refer to pages 143 and 150.)
2. If two or more Special I/O Units are assigned the same unit number, a Unit Number Duplication Error will occur (A401.13 will turn ON) and the PLC will not operate.

Allocations in CIO Area

The allocations of words and bits in the CIO Area for Cyclic Conversion Mode are shown in the following table. In Direct Conversion Mode, the peak value hold function, Disconnection Detection Bits, and the Alarm Flag in bit 11 are not used.

I/O	Word	Bits															
		15	14	13	12	11	10	09	08	07	06	05	04	03	02	01	00
Outputs (CPU Unit to Analog Input Unit)	n	Not used.												Peak value hold function			
														Input 4	Input 3	Input 2	Input 1
Inputs (Analog Input Unit to CPU Unit)	n+1	Input 1 conversion value															
		16^3				16^2				16^1				16^0			
	n+2	Input 2 conversion value															
	n+3	Input 3 conversion value															
	n+4	Input 4 conversion value															
	n+5	Not used.															
	n+6	Not used.															
	n+7	Not used.															
	n+8	Not used.															
	n+9	Alarm Flags/Conversion Mode								Not used.				Disconnection detection			
														Input 4	Input 3	Input 2	Input 1

For the CIO Area word addresses, n = CIO 2000 + (unit number × 10).

■ **Set Values and Stored Values**

Item	Contents	Yes: Settable or usable No: Not settable or usable		Page
		Cyclic Conversion Mode	Direct Conversion Mode	
Peak value hold function	0: Peak value hold not used. 1: Peak value hold used.	Yes	No	164
Conversion values	16-bit binary data	Yes	Yes (See note 1.)	157
Input disconnection detection	0: No disconnection 1: Disconnected	Yes	No	165
Alarm Flags/ Conversion Mode	Bits 00 to 03: Disconnection detection	Yes	No	168
	Bits 04 to 07: Not used.	Not used.		
	Bit 08: Scaling data setting error	Yes	No	
	Bit 09: Input signal range setting error or error in number of inputs setting	Yes	No	
	Bit 10: Not used	Not used.		
	Bit 11: Error in setting of number of mean value buffers	Yes	No (See note 2.)	
	Bit 12: Error in setting of conversion mode	Yes	Yes	
	Bit 13: Direct Conversion Mode	Yes	Yes	
	Bit 14: A/D converter error	Yes	Yes	
	Bit 15: Not used	Not used.		

Note

1. Data is stored when the ANALOG INPUT DIRECT CONVERSION (AIDC) instruction is executed.
2. Turns ON when there is a setting error.
3. The input disconnection detection function can be used when the input signal range is set to 1 to 5 V or 4 to 20 mA.
4. In PROGRAM mode, all CIO Area data for the Analog Input Units will be exchanged regardless of the conversion mode.

Input signal range	Voltage/current for disconnection detection
1 to 5 V	Less than 0.3 V
4 to 20 mA	Less than 1.2 mA

4-6 Analog Input Functions and Operating Procedures

4-6-1 Input Settings and Conversion Values

Number of Analog Inputs Used

The Analog Input Unit performs conversion processing only for the specified number of analog inputs. To specify the number of analog inputs, use a Programming Device to set DM word m as shown in the following diagram.

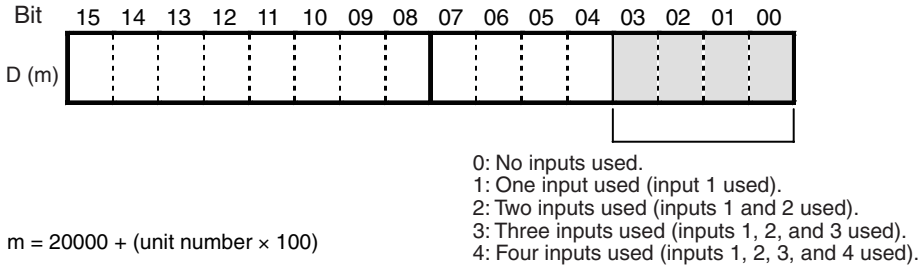

Note
1. In Cyclic Conversion Mode, the conversion period for analog inputs can be made shorter by setting fewer analog inputs. 20 μs for 1 point, 25 μs for 2 points, 30 μs for 3 points, 35 μs for 4 points
2. The conversion value for unused analog inputs will be 0000.

Input Signal Range

Each of inputs 1 to 4 can be set to one of the following input signal ranges: −10 to 10 V, 0 to 10 V, 4 to 20 mA, −5 to 5 V, 1 to 5 V. To specify the input signal range for each input, use a Programming Device to set DM words m+2, m+6, m+10, and m+14 as shown in the following diagram.

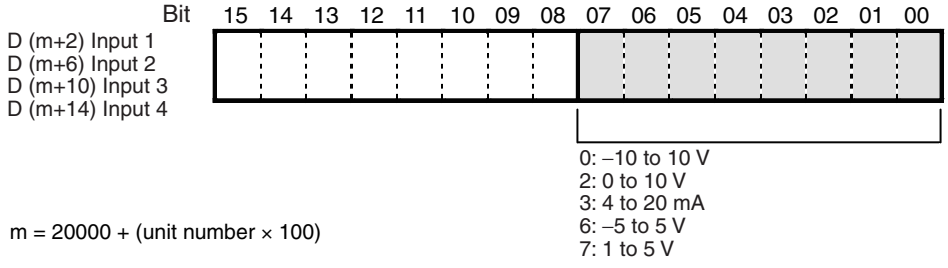

Note When DM Area settings have been carried out using a Programming Device, be sure to either cycle the power supply to the PLC, or turn ON the Special I/O Unit Restart Bit. The contents of the initial settings in the DM Area will be transferred to the Special I/O Unit when the power is turned ON or the Special I/O Unit Restart Bit is turned ON.

Reading Conversion Values

Analog input conversion values are written to CIO words n+1 to n+4 as 16-bit binary data.

Word	Contents
n+1	Input 1 conversion value
n+2	Input 2 conversion value
n+3	Input 3 conversion value
n+4	Input 4 conversion value

For the CIO Area word addresses, n = CIO 2000 + (unit number × 10).

Use MOV(021) or XFER(070) to read conversion values in the user program.

Example 1

In this example, the conversion value from only one input is read. (The unit number is 0.)

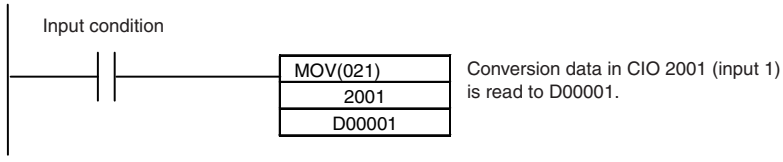

Example 2

In this example, the conversion values from multiple inputs are read. (The unit number is 0.)

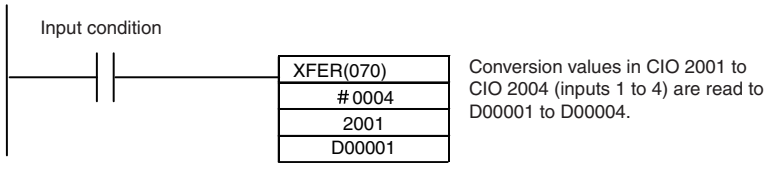

4-6-2 Conversion Mode Setting

Bits 00 to 07 in DM word m+1 can be used to set the conversion mode. The conversion mode that is set determines the timing of refreshing analog input values. This setting applies to analog inputs 1 to 4. There are not individual settings for each input.

The following table describes the conversion modes that can be set.

Conversion mode	Operation	Features	Remarks
Cyclic Conversion Mode	A/D conversion is performed once each conversion period and conversion values are refreshed during the I/O refresh period. It takes at least one cycle before the converted data is read by the CPU Unit.	Operation is the same as that of the CJ1W-AD041-V1/ AD081-V1 Analog Input Units.	This is the default setting.
Direct Conversion Mode	A/D conversion is performed and the converted value is refreshed immediately when the ANALOG INPUT DIRECT CONVERSION (AIDC) instruction is executed in the CPU Unit. The converted value is not refreshed unless the ANALOG INPUT DIRECT CONVERSION (AIDC) instruction is executed. If the CPU Unit is in PROGRAM mode, the conversion values are automatically refreshed using Cyclic Conversion Mode.	AIDC can be used together with the ANALOG OUTPUT DIRECT CONVERSION (AODC) instruction for the CJ1W-DA042V Analog Output Unit to create a consistent input-processing-output time. If these instructions are used in a scheduled interrupt task, a constant and consistent input-processing-output time can be created.	A CJ2H-CPU□□(-EIP) CPU Unit with unit version 1.1 or later and CJ2M/CJ3M-CPU□□ are required to use direct conversion.

To specify the conversion mode, use a Programming Device to set DM word (m+1) as shown in the following diagram.

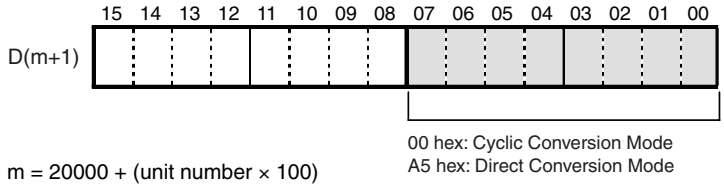

Note

1. When DM Area settings have been carried out using a Programming Device, be sure to either cycle the power supply to the PLC, or turn ON the Special I/O Unit Restart Bit. The contents of the initial settings in the DM Area will be transferred to the Special I/O Unit when the power is turned ON or the Special I/O Unit Restart Bit is turned ON.
2.

Example 1

In this example, the conversion value from analog input 1 is read in Direct Conversion Mode. (The unit number is 0.)

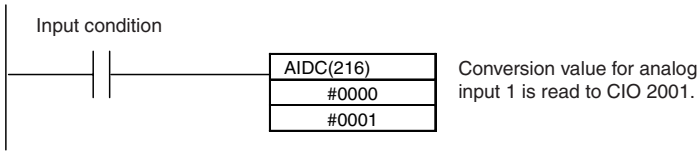

Example 2

In this example, the conversion values from analog inputs 1 to 4 are read in Direct Conversion Mode. (The unit number is 0.)

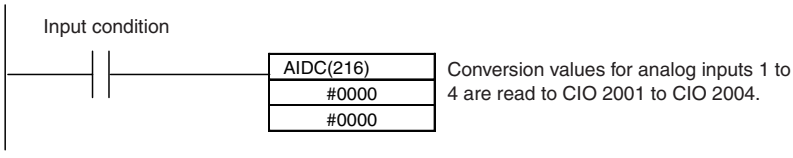

The ANALOG INPUT DIRECT CONVERSION (AIDC) instruction is used in Direct Conversion Mode.

3. Refer to the *CS/CJ/NSJ-series Instruction Reference Manual* (Cat. No. W474) for information on the ANALOG INPUT DIRECT CONVERSION (AIDC) instruction.
   Refer to page 481 for the instruction execution times for the ANALOG INPUT DIRECT CONVERSION instruction.

4-6-3 Mean Value Processing

In Cyclic Conversion Mode, the Analog Input Unit can compute the mean value of the conversion values of analog inputs that have been previously sampled. Mean value processing uses a moving average of the values in the history buffers. It has no effect on the data refresh cycle. (The number of history buffers that can be set for mean value processing is 2, 4, 8, 16, 32, 64, 128, 256, or 512.)

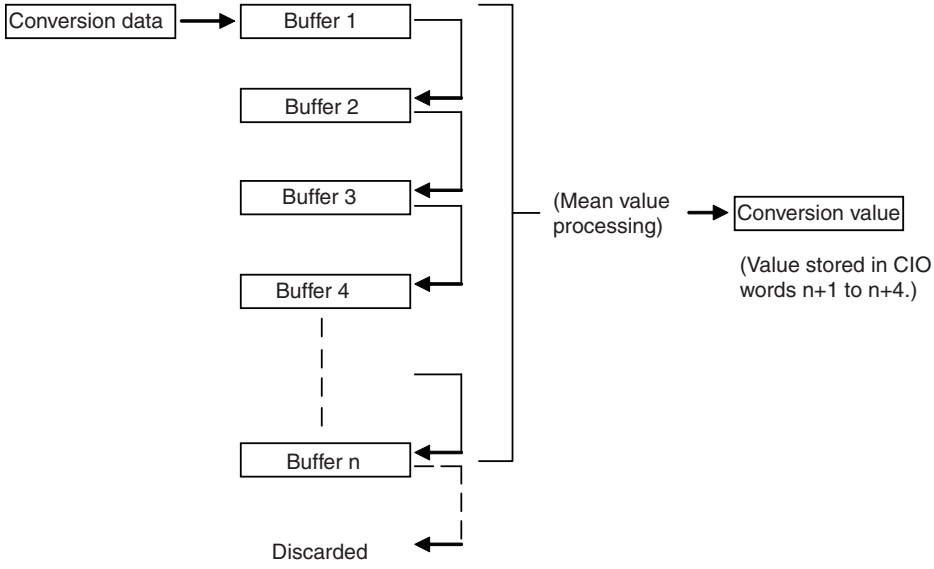

Note

1. When “n” number of history buffers are being used, the first conversion data will be stored for all “n” history buffers when data conversion is started or after a disconnection is restored.
2. When mean value processing is used together with the peak value hold function, the peak mean value will be held.

Use a Programming Device to set the words shown in the following table to enable or disable mean value processing and to set the number of history buffers to use.

DM Area word	Contents	Set value
D (m+3)	Input 1 mean value processing	0: Mean value processing not used. 1: Mean value processing with 2 buffers 2: Mean value processing with 4 buffers 3: Mean value processing with 8 buffers 4: Mean value processing with 16 buffers 5: Mean value processing with 32 buffers 6: Mean value processing with 64 buffers 7: Mean value processing with 128 buffers 8: Mean value processing with 256 buffers 9: Mean value processing with 512 buffers
D (m+7)	Input 2 mean value processing	
D (m+11)	Input 3 mean value processing	
D (m+15)	Input 4 mean value processing	

For the DM word addresses, m = D20000 + (unit number × 100)

Note

1. When DM Area settings have been carried out using a Programming Device, be sure to either cycle the power supply to the PLC, or turn ON the Special I/O Unit Restart Bit. The contents of the initial settings in the DM Area will be transferred to the Special I/O Unit when the power is turned ON or the Special I/O Unit Restart Bit is turned ON.
2. The history buffer moving average is calculated as shown below. (In this example, there are four buffers.)
   a) With the first cycle, data 1 is stored in all the history buffers.

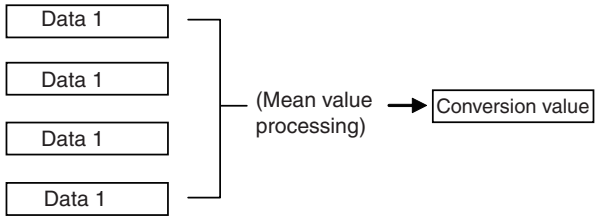

   Mean value = (Data 1 + Data 1 + Data 1 + Data 1) ÷ 4

   b) With the second cycle, data 2 is stored in the first history buffer.

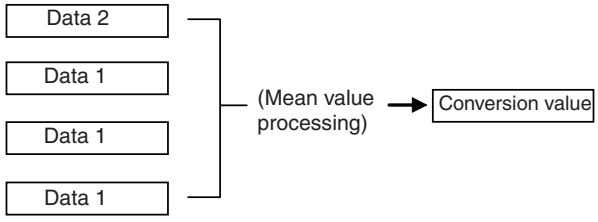

   Mean value = (Data 2 + Data 1 + Data 1 + Data 1) ÷ 4

   c) With the third cycle, data 3 is stored in the first history buffer.

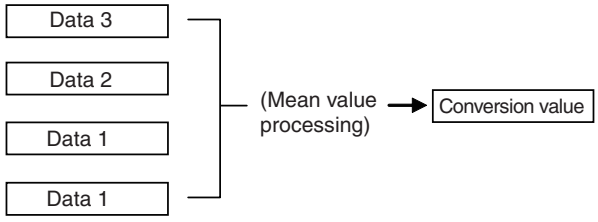

   Mean value = (Data 3 + Data 2 + Data 1 + Data 1) ÷ 4

   d) With the fourth cycle, data 4 is stored in the first history buffer.

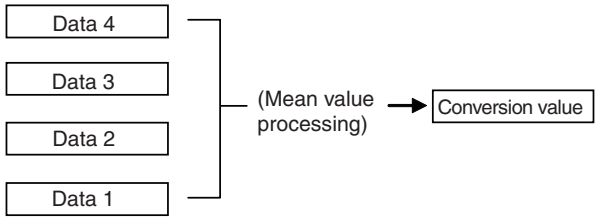

   Mean value = (Data 4 + Data 3 + Data 2 + Data 1) ÷ 4

e) With the fifth cycle, data 5 is stored in the first history buffer.

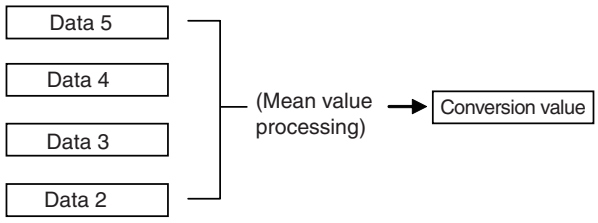

Mean value = (Data 5 + Data 4 + Data 3 + Data 2) ÷ 4

- When a disconnection is restored, the mean value processing function begins again from step 1.

4-6-4 Input Scaling Function

When upper and lower limits have been preset in 16-bit binary data in the CPU Unit's DM Area between –32,000 and 32,000 decimal (8300 and 7D00 hex), analog inputs are converted from analog to digital and the result is automatically converted to user-specified units with the upper and lower limits taken as full scale based on the conversion resolution. (See note.) This scaling function eliminates the previous necessity of providing programs for numeric conversion to specified units.

Note To set the upper or lower limit to a negative number, use two's complement (i.e., –32,000 to –1 are set as 8300 to FFFF hex).

Note

1. The upper limit is normally set to be greater than the lower limit, but it is also possible to set lower limit to be greater than the upper limit for reverse scaling.
2. Actual A/D conversion is executed at up to –5% to +105% of full scale.
3. When setting upper and lower limits in the DM Area in the specified units, be sure to make the settings in 16-bit binary data (with negative values set as two's complement). For decimal numbers –32,000 to 32,000, set 16-bit binary data (8300 to 7D00 hex).
4. If the scaling upper limit equals the scaling lower limit, or if the scaling upper limit or scaling lower limit is outside the range of ±32,000, a scaling data setting error will occur and scaling will not be executed. Normal operation is performed without scaling if both the upper and lower limits are set to 0000 (the default values).

Setting Upper and Lower Limits for Scaling

Set the upper and lower limits for scaling for inputs 1 to 4 in the following DM Area words.

DM Area word	Bits															
	15	14	13	12	11	10	09	08	07	06	05	04	03	02	01	00
DM (m+4)	Input 1 scaling lower limit															
DM (m+5)	Input 1 scaling upper limit															
DM (m+8)	Input 2 scaling lower limit															
DM (m+9)	Input 2 scaling upper limit															
DM (m+12)	Input 3 scaling lower limit															
DM (m+13)	Input 3 scaling upper limit															
DM (m+16)	Input 4 scaling lower limit															
DM (m+17)	Input 4 scaling upper limit															

m = 20000 + (unit number × 100)

Note For decimal numbers –32,000 to 32,000, set 16-bit binary data (8300 to 7D00 hex).

Example Setting 1

For this example, the following conditions are set in the DM Area.

Condition	The values shown in parentheses are 16-bit binary data.
Input signal range	0 to 10 V
Scaling lower limit	0 (0000 hex)
Scaling upper limit	10,000 (2710 hex)

The following diagram shows the correspondence between input signals and converted scaling values.

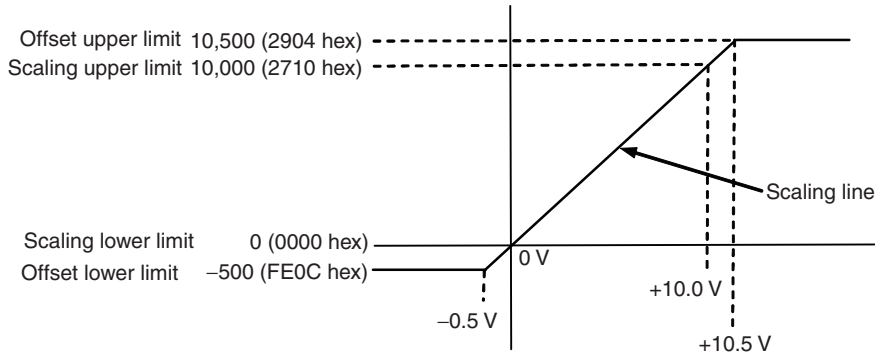

Input signal range	The conversion results shown in parentheses are 16-bit binary data.
0 V	0 (0000 hex)
10 V	10,000 (2710 hex)
–0.5 V	–500 (FE0C hex)
10.5 V	10,500 (2904 hex)

Example Setting 2 (Reverse Scaling)

For this example, the following conditions are set in the DM Area.

Condition	The values shown in parentheses are 16-bit binary data.
Input signal range	0 to 10 V
Scaling lower limit	10,000 (2710 hex)
Scaling upper limit	0 (0000 hex)

The following diagram shows the correspondence between input signals and converted scaling values.

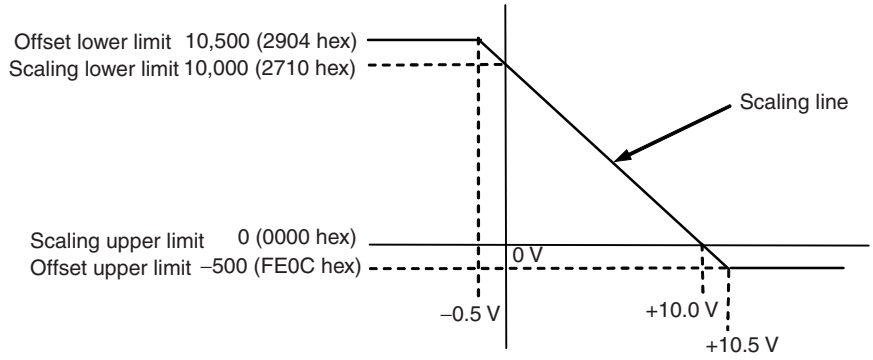

Input signal range	The conversion results shown in parentheses are 16-bit binary data.
0 V	10,000 (2710 hex)
10 V	0 (0000 hex)
–0.5 V	10,500 (2904 hex)
10.5 V	–500 (FE0C hex)

4-6-5 Peak Value Hold Function

The peak value hold function holds the maximum digital conversion value for every input (including mean value processing). The peak value hold function can be used only in Cyclic Conversion Mode.

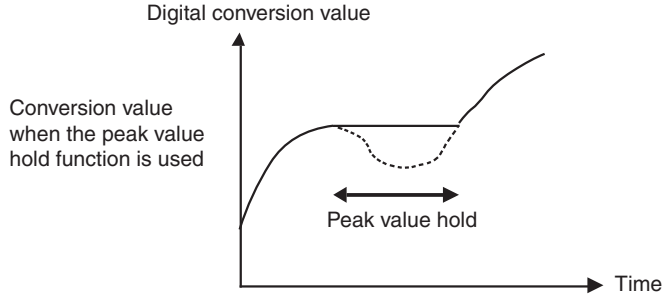

The peak value hold function can be set separately for each input by turning ON the corresponding bit (00 to 03) in CIO word n.

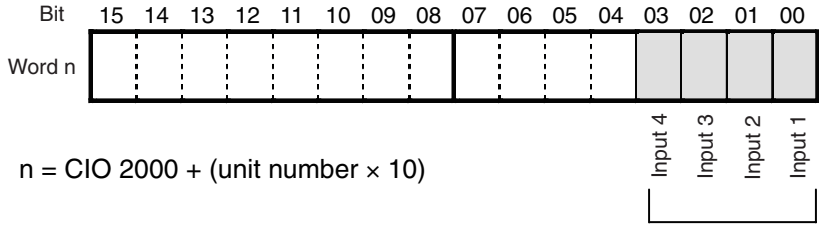

n = CIO 2000 + (unit number × 10)

The peak value is held as long as the bit for the corresponding input is ON.
The conversion value is reset when the bit is turned OFF.

Note 1. Example: In the following example, the peak value hold function is in effect for input number 1. (The unit number is 0.)

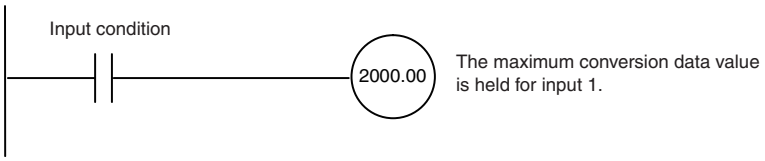

2. When mean value processing is used together with the peak value hold function, the peak mean value will be held.
3. If a disconnection occurs when the peak value hold function is enabled, the conversion value will be 7FFF hex. When the disconnection is restored, the peak hold function will be executed using the previous peak value. (The input signal range must be set to 1 to 5 V or 4 to 20 mA.)
4. The peak value hold function will be disabled when the loads are turned OFF from the CPU Unit.

4-6-6 Input Disconnection Detection Function

When an input signal range of 1 to 5 V or 4 to 20 mA is used, input wiring disconnections can be detected. The detection condition for each of the input signal ranges is shown in the following table.

Input signal range	Voltage/current for disconnection detection
1 to 5 V	Less than 0.3 V
4 to 20 mA	Less than 1.2 mA

The input disconnection detection signals for the inputs are stored in bits 00 to 03 of CIO word n+9. Specify these bits as execution conditions to use disconnection detection in the user's program.

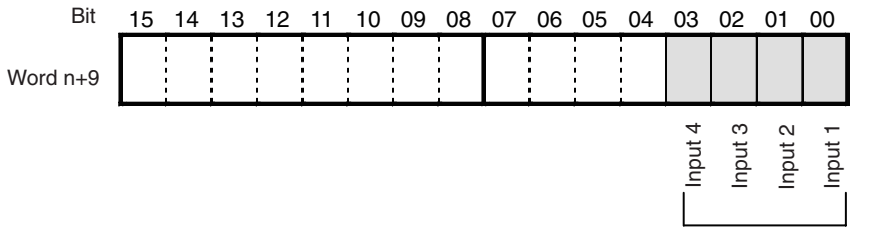

The corresponding bit turns ON when a disconnection is detected for a given input. When the disconnection is restored, the bit turns OFF.

n = CIO 2000 + (unit number × 10)

Note The conversion value will be 7FFF hex during a disconnection. This conversion value can be used to detect disconnections during Direct Conversion Mode.

Example

In the following example, the conversion value for analog input 1 is read only when there is no disconnection (The unit number is 00.)

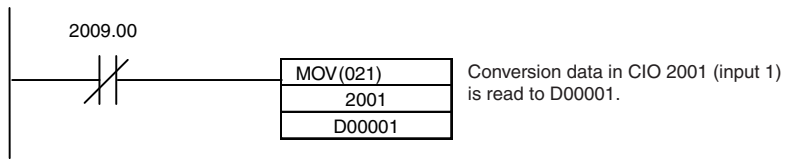

4-7 Handling Errors and Alarms

4-7-1 Indicators and Error Flowchart

Indicators

If an alarm or error occurs in the Analog Input Unit, the ERC or ERH indicator on the front panel of the Unit will light.

Front panel of Unit

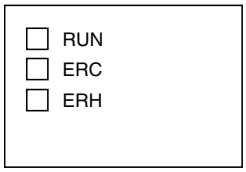

Indicator	Meaning	Indicator status	Operating status
RUN (green)	Operating	Lit	Operation normal.
		Not lit	Unit has stopped exchanging data with the CPU Unit.
ERC (red)	Error detected by Unit	Lit	Alarm has occurred (such as disconnection detection) or initial settings are incorrect.
		Not lit	Operating normally.
ERH (red)	Error in the CPU Unit	Lit	Error has occurred during data exchange with the CPU Unit.
		Not lit	Operating normally.

Troubleshooting Procedure

Use the following procedure for troubleshooting Analog Input Unit errors.

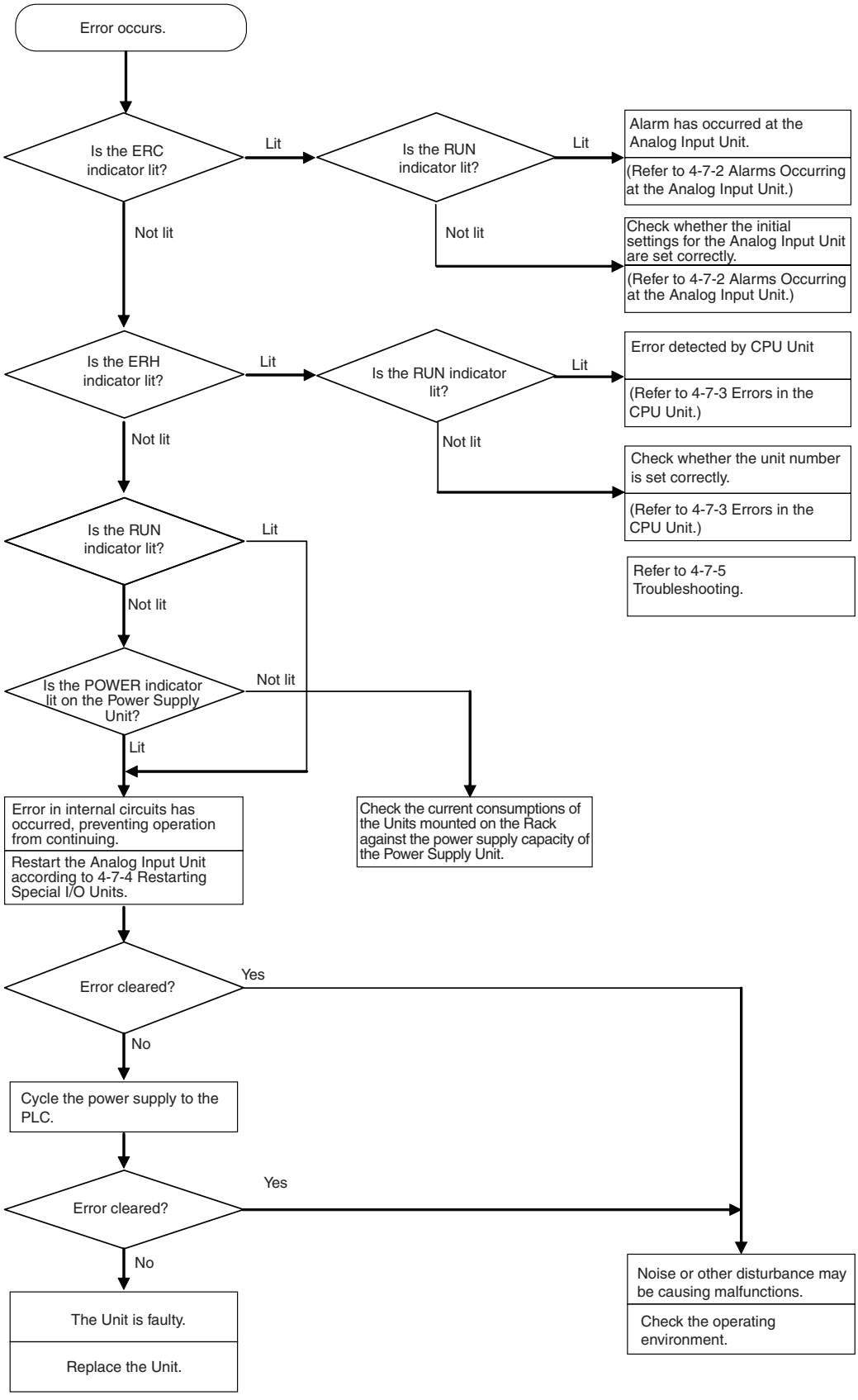

4-7-2 Alarms Occurring at the Analog Input Unit

The ERC indicator will light when the Analog Input Unit detects an alarm. The alarm flags in bits 08 to 15 of CIO word n+9 will turn ON.

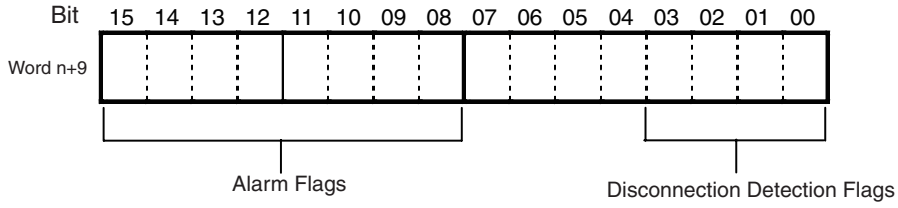

ERH and RUN Indicators: Lit

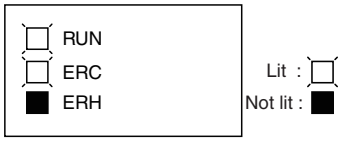

The ERC and RUN indicators will be lit if an error occurs while the Unit is operating normally.
The following alarm flags will turn ON in CIO word n+9
The alarms will be cleared automatically when the error has been eliminated.

n+9	Alarm flag	Error contents	Input status	Countermeasure
Bits 00 to 03	Input disconnection detection	A disconnection was detected. (See note.)	Conversion data becomes 7FFF hex.	Check the rightmost byte of CIO word n+9. The input for bits that are ON may be disconnected. Restore any disconnected inputs.
Bit 14	A/D converter error	An error occurred in the A/D converter or in A/D conversion.	Holds the values immediately prior to the error. No data is changed.	• If the error persists even after the power supply is cycled or the Unit is restarted, check for a source of noise in the environment. • If the error persists even when there is no source of noise, replace the Analog Input Unit.

n = CIO 2000 + (unit number × 10)

Note The input disconnection detection function can be used for analog inputs that are in Cyclic Conversion Mode and for which the input signal range is set to 1 to 5 V or 4 to 20 mA.

ERC Indicator: Lit, RUN Indicator: Not Lit

The ERC indicator will be lit when the initial settings for the Analog Input Unit are not set correctly. The following alarm flags will turn ON in CIO word n+9.

These alarm flags will turn OFF when the error is cleared and the power supply to the PLC is cycled, or the Special I/O Unit Restart Bit is turned ON.

n+9	Alarm flag	Error contents	Input status	Countermeasure
Bit 08	Scaling data setting error	The scaling settings are out of range. The upper limit equals the lower limit (not 0000).	Conversion does not start and data becomes 0000 hex.	Correct the settings.
Bit 09	Input signal range setting error or error in number of inputs setting	The setting of the number of inputs used or an input signal range is wrong.		Set the number of analog inputs used to 0 to 4 and set the input signal ranges to 0, 2, 3, 6, or 7.
Bit 11	Error in setting of number of mean value buffers	The wrong number of samplings has been specified for mean processing.		Specify a number from 0 to 9.
Bit 12	Error in setting of conversion mode	The setting for Cyclic Conversion Mode or Direct Conversion Mode is wrong.		Set 00 hex or A5 hex.

4-7-3 Errors in the CPU Unit

The ERH indicator will light if an error occurs in the CPU Unit or I/O bus and I/O refreshing with the Special I/O Units is not performed correctly, preventing the Analog Input Unit from operating.

ERH and RUN Indicators: Lit

The ERH and RUN indicators will light if an I/O bus error occurs or if a WDT (watchdog timer) error occurs in the CPU Unit, resulting in incorrect I/O refresh with the Analog Input Unit. Cycle the power supply to the PLC or restart the Analog Input Unit.

Error	Error contents	Input status
I/O bus error	Error has occurred during data exchange with the CPU Unit.	Conversion data becomes 0000 hex.
CPU Unit monitoring error	No response from CPU Unit for a specified period of time.	Maintains the status from before the error.
CPU Unit WDT error	Error has occurred in CPU Unit.	Changes to undefined state.

ERH Indicator: Lit, RUN Indicator: Not Lit

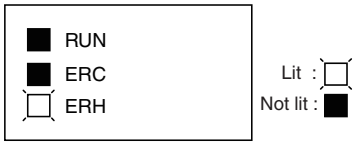

The unit number of the Analog Input Unit has not been set correctly.

Error	Error contents	Input status
Unit Number Duplication Error	The same unit number has been assigned to more than one Unit or the unit number was set to a value other than 00 to 95.	Conversion does not start and data becomes 0000 hex.
Special I/O Unit Setting Error	The Special I/O Units registered in the I/O tables are different from the ones actually mounted.	

4-7-4 Restarting Special I/O Units

To restart the Analog Input Unit after changing the contents of the DM Area or correcting an error, cycle the power to the PLC or turn ON the Special I/O Unit Restart Bit.

■ Special I/O Unit Restart Bits

Bit	Function	
A502.00	Unit No. 0 Restart Bit	Restarts the Unit when turned ON.
A502.01	Unit No. 1 Restart Bit	
to	to	
A502.15	Unit No. 15 Restart Bit	
A503.00	Unit No. 16 Restart Bit	
to	to	
A507.15	Unit No. 95 Restart Bit	

- The previous conversion data will be held while the Unit is being restarted.

Note If the error is not cleared even after turning the Special I/O Unit Restart Bit ON, then replace the Unit.

4-7-5 Troubleshooting

The following tables list the probable causes of troubles that may occur, and the countermeasures for dealing with them.

Conversion Data Does Not Change

Probable cause	Countermeasure	Page
Number of analog inputs used is not set correctly.	Set the number of analog inputs used to enable all inputs that are being used.	157
The ANALOG INPUT DIRECT CONVERSION (AIDC) instruction is not being executed in Direct Conversion Mode.	Execute the ANALOG INPUT DIRECT CONVERSION (AIDC) instruction in the user program.	158
The peak value hold function is in operation.	Turn OFF the peak value hold function if it is not required.	164
The input device is not working, the input wiring is wrong, or there is a disconnection.	Using a tester, check to see if the input voltage or current is changing.	---
	Use Unit's alarm flags to check for a disconnection. In Direct Conversion Mode, see if the conversion value is 7FFF hex in RUN or MONITOR mode to check for disconnections.	165

Value Does Not Change as Intended

Probable cause	Countermeasure	Page
The input device's signal range does not match the input signal range for the relevant input number at the Analog Input Unit.	Check the specifications of the input device, and match the settings for the input signal ranges.	132, 134
For the 4 to 20 mA range, the positive current input terminal and positive voltage input terminal are not connected with the enclosed short bar.	Connect the positive current input terminal and positive voltage input terminal with the enclosed short bar.	144

Conversion Values are Inconsistent

Probable cause	Countermeasure	Page
The input signals are being affected by external noise.	Try connecting the cable shield to the AG terminal on the Analog Input Unit, or disconnecting it if it is already connected.	146
	Insert a 0.01-μF ceramic capacitor or film capacitor between the input's (+) and (–) terminals.	---
	Try increasing the number of mean value processing buffers.	160

SECTION 5
CS-series Analog Output Units (CS1W-DA041/08V/08C)

This section explains how to use the CS1W-DA041/08V/08C Analog Output Units.

5-1 Specifications 174
5-1-1 Specifications 174
5-1-2 Output Function Block Diagram 176
5-1-3 Output Specifications 176
5-2 Operating Procedure 178
5-2-1 Procedure Examples 179
5-3 Components and Switch Settings 184
5-3-1 Indicators 185
5-3-2 Unit Number Switches 186
5-3-3 Operation Mode Switch 186
5-4 Wiring 187
5-4-1 Terminal Arrangement 187
5-4-2 Internal Circuitry 188
5-4-3 Output Wiring Example 189
5-4-4 Output Wiring Considerations 190
5-5 Exchanging Data with the CPU Unit 190
5-5-1 Outline of Data Exchange. 190
5-5-2 Unit Number Settings 191
5-5-3 Special I/O Unit Restart Bits 191
5-5-4 Fixed Data Allocations 192
5-5-5 I/O Refresh Data Allocations 194
5-6 Analog Output Functions and Operating Procedures 197
5-6-1 Output Settings and Conversions 197
5-6-2 Starting and Stopping Conversion 199
5-6-3 Output Hold Function 200
5-6-4 Output Setting Errors 201
5-7 Adjusting Offset and Gain 201
5-7-1 Adjustment Mode Operational Flow 201
5-7-2 Output Offset and Gain Adjustment Procedures 203
5-8 Handling Errors and Alarms 211
5-8-1 Indicators and Error Flowchart 211
5-8-2 Alarms Occurring at the Analog Output Unit. 213
5-8-3 Errors in the CPU Unit 214
5-8-4 Restarting Special I/O Units 215
5-8-5 Troubleshooting 216

5-1 Specifications

5-1-1 Specifications

Item		CS1W-DA041	CS1W-DA08V	CS1W-DA08C
Unit type		CS-series Special I/O Unit		
Isolation (See note 1.)		Between outputs and PLC signals: Photocoupler (No isolation between output signals.)		
External terminals		21-point detachable terminal block (M3 screws)		
Current consumption		130 mA max. at 5 VDC, 180 mA max. at 26 VDC	130 mA max. at 5 VDC, 180 mA max. at 26 VDC	130 mA max. at 5 VDC, 250 mA max. at 26 VDC
Dimensions (mm) (See note 2.)		35 × 130 × 126 (W × H × D)		
Weight		450 g max.		
General specifications		Conforms to general specifications for SYSMAC CS-series Series.		
Mounting position		CS-series CPU Rack or CS-series Expansion Rack (Cannot be mounted to a C200H Expansion I/O Rack or a SYSMAC BUS Slave Rack.)		
Maximum number of Units (See note 3.)		Depends on the Power Supply Unit.		
Data exchange with CPU Units (See note 4.)		Special I/O Unit Area CIO 200000 to CIO295915 (Words CIO 2000 to CIO 2959)		
		Internal Special I/O Unit DM Area (D20000 to D29599)		
Output specifications	Number of analog outputs	4	8	8
	Output signal ranges (See note 5.)	1 to 5 V/4 to 20 mA 0 to 5 V 0 to 10 V –10 to 10V	1 to 5 V 0 to 5 V 0 to 10 V –10 to 10 V	4 to 20 mA
	Output impedance	0.5 Ω max. (for voltage output)		
	Max. output current (for 1 point)	12 mA (for voltage output)		
	Maximum permissible load resistance	600 Ω (current output) (See note 9.)	---	600 Ω (current output) (See note 8.)
	Resolution	4,000 (full scale)		
	Set data	16-bit binary data		
	Accuracy (See note 6.)	23±2°C: Voltage output: ±0.3% of full scale Current output: ±0.5% of full scale		
		0°C to 55°C: Voltage output: ±0.5% of full scale Current output: ±0.8% of full scale		
	D/A conversion period (See note 7.)	1.0 ms/point max.		
Output functions	Output hold function	Outputs the specified output status (CLR, HOLD, or MAX) under any of the following circumstances. When the Conversion Enable Bit is OFF. (See note 8.) In adjustment mode, when a value other than the output number is output during adjustment. When there is an output setting error or a fatal error occurs at the PLC. When the CPU Unit is on standby. When the Load is OFF.		

Note

1. Do not apply a voltage higher than 600 V to the terminal block when performing withstand voltage test on this Unit.
2. Refer to *Dimensions* on page 441 for details on the Unit's dimensions.

3. Maximum Number of Units

Power Supply Unit	CS1W-DA041/08V	CS1W-DA08C
C200HW-PA204 C200HW-PA204S C200HW-PA204R C200HW-PD204	3 Units max.	2 Units max.
C200HW-PA209R	7 Units max.	5 Units max.

The maximum number of Units that can be mounted to one Rack varies depending on the current consumption of the other Units mounted to the Rack and may be less than the number shown in the above table.

4. Data Exchange with CPU Units

Special I/O Unit Area CIO 200000 to CIO295915 (Words CIO 2000 to CIO 2959)	Exchanges 10 words of data per Unit.	CPU Unit to Analog Output Unit	Analog output setting data Conversion Enable Bit
		Analog Output Unit to CPU Unit	Alarm flags
Internal Special I/O Unit DM Area (D20000 to D29599)	Transmits 100 words of data per Unit at power-up or when the Unit is restarted.	CPU Unit to Analog Output Unit	Output signal conversion enable/disable, output signal range setting Output status for output hold

5. Output signal ranges can be set for each output.
6. The accuracy is given for full scale. For example, an accuracy of ±0.3% means a maximum error of ±12 (BCD).
7. D/A conversion time is the time required for converting and outputting the PLC data. It takes at least one cycle for the data stored in the PLC to be read by the Analog Output Unit.
8. When the operation mode for the CPU Unit is changed from RUN mode or MONITOR mode to PROGRAM mode, or when the power is turned ON, the Output Conversion Enable Bit will turn OFF. The output status specified according to the output hold function will be output.
9. The load resistance is adjusted to 250 Ω at the factory. Always adjust the offset gain before application when the load resistance is not 250 Ω.

   The CS1W-DA041 is adjusted for current outputs (load resistance: 250 Ω) at the factory. Adjust the offset gain before application when using voltage outputs.

5-1-2 Output Function Block Diagram

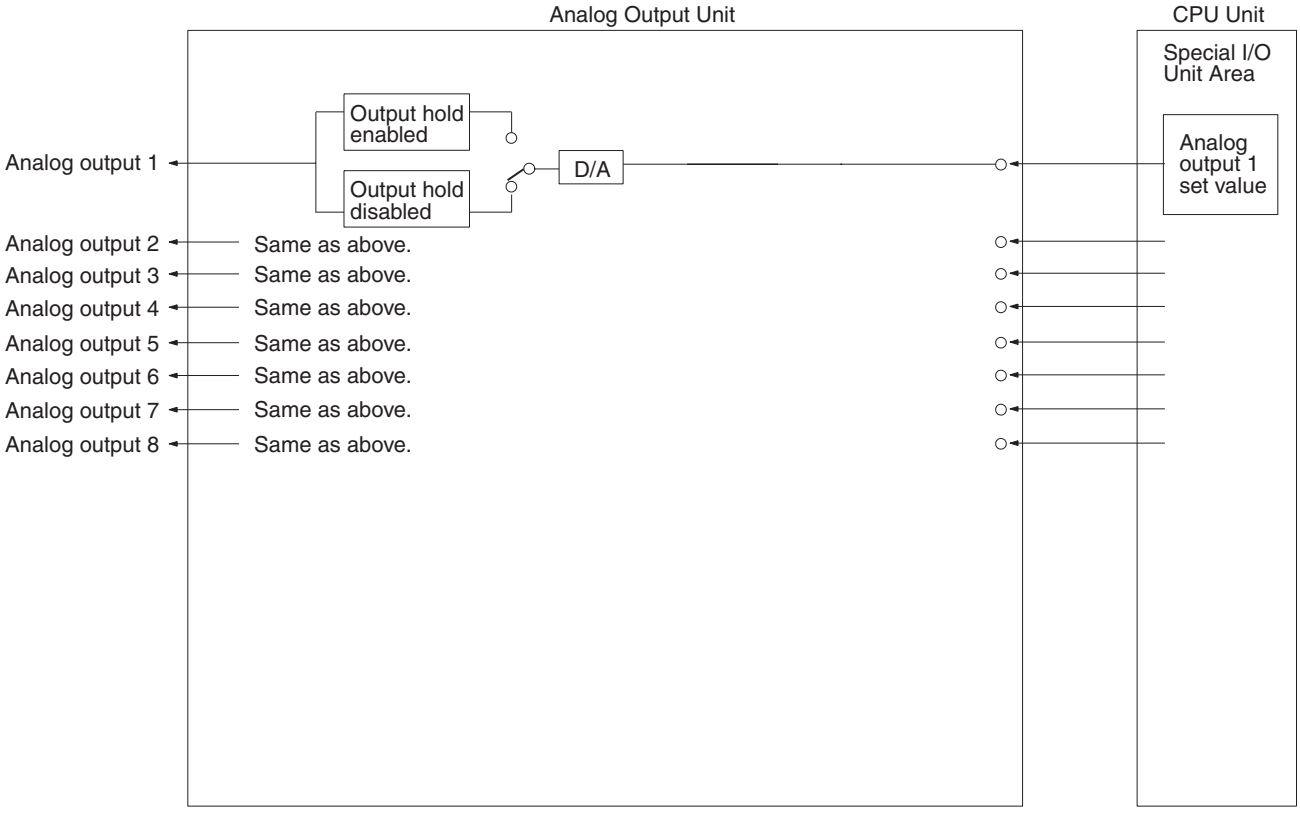

Note There are only four analog outputs for the CS1W-DA041.

5-1-3 Output Specifications

If the set value is outside the specified range provided below, an output setting error will occur, and the output specified by the output hold function will be output.

Range: 1 to 5 V (4 to 20 mA)

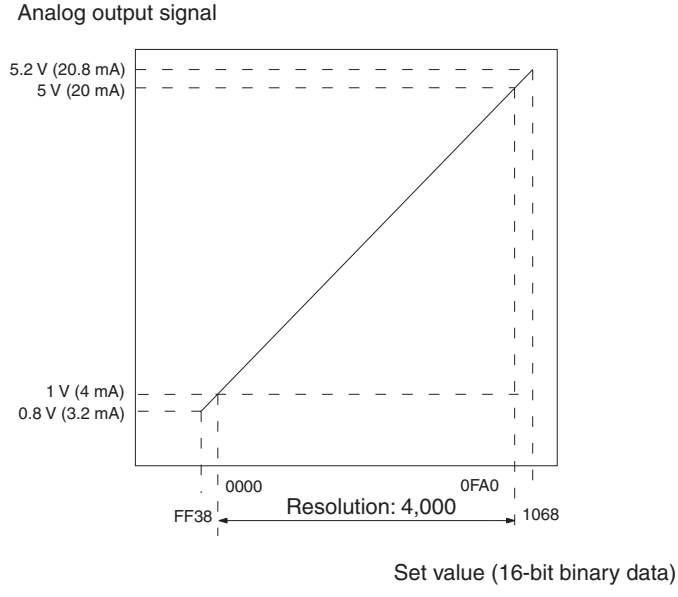

Range: 0 to 10 V

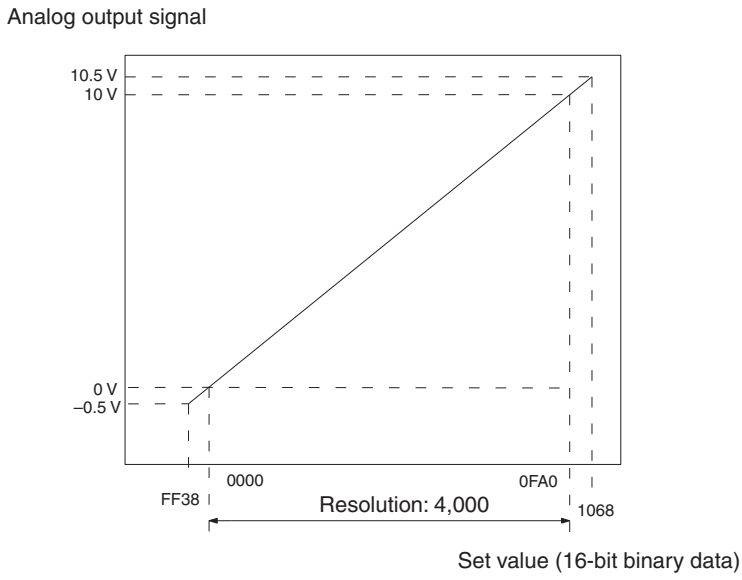

Range: 0 to 5 V

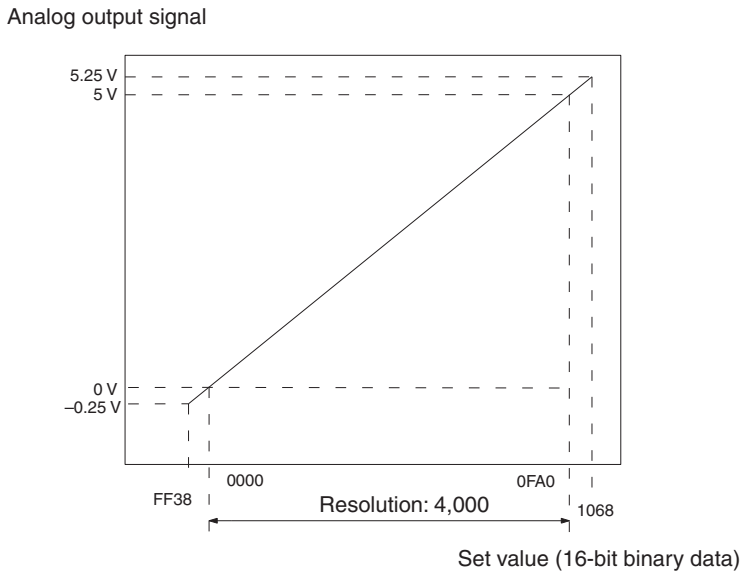

Range: –10 to 10 V

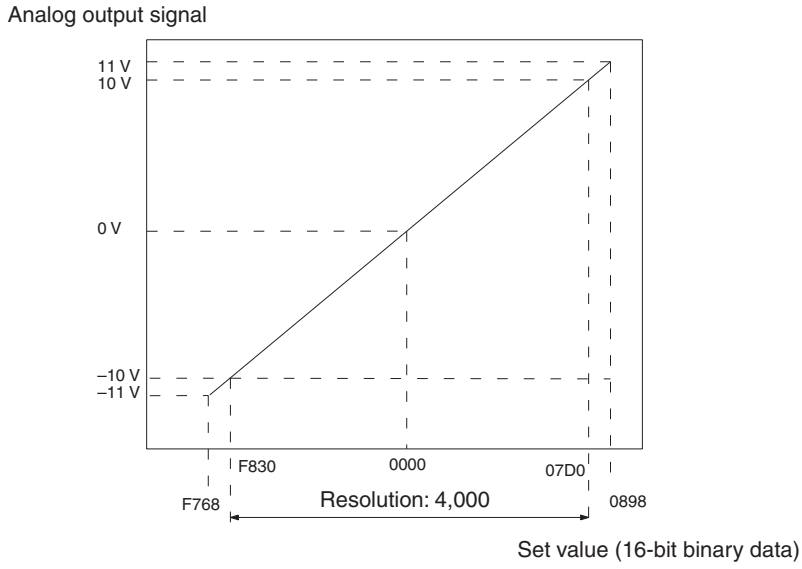

Note The set values for a range of –10 to 10 V will be as follows:

16-bit binary data	BCD
F768	–2200
:	:
FFFF	–1
0000	0
0001	1
:	:
0898	2200

5-2 Operating Procedure

Follow the procedure outlined below when using Analog Output Units.

Installation and Settings

1,2,3...

1. Set the operation mode switch on the rear panel of the Unit to normal mode.
2. Wire the Unit.
3. Use the unit number switches on the front panel of the Unit to set the unit number.
4. Turn ON the power to the PLC.
5. Create the I/O tables.
6. Make the Special I/O Unit DM Area settings.
   - Set the output numbers to be used.
   - Set the output signal ranges.
   - Set the output hold function.
7. Turn the power to the PLC OFF and ON, or turn ON the Special I/O Unit Restart Bit.

When the output for the connected devices needs to be calibrated, follow the procedures in *Offset and Gain Adjustment* below. Otherwise, skip to *Operation* below.

Offset and Gain Adjustment

1,2,3...

1. Set the operation mode switch on the rear panel of the Unit to adjustment mode.
2. Turn ON the power to the PLC.
3. Adjust the offset and gain.
4. Turn OFF the power to the PLC.
5. Change the setting of the operation mode switch on the rear panel of the Unit back to normal mode.

Operation

1,2,3...

1. Turn ON the power to the PLC.
2. Ladder program
   - Write set values by means of MOV(021) and XFER(070).
   - Start and stop conversion output.
   - Obtain error codes.

5-2-1 Procedure Examples

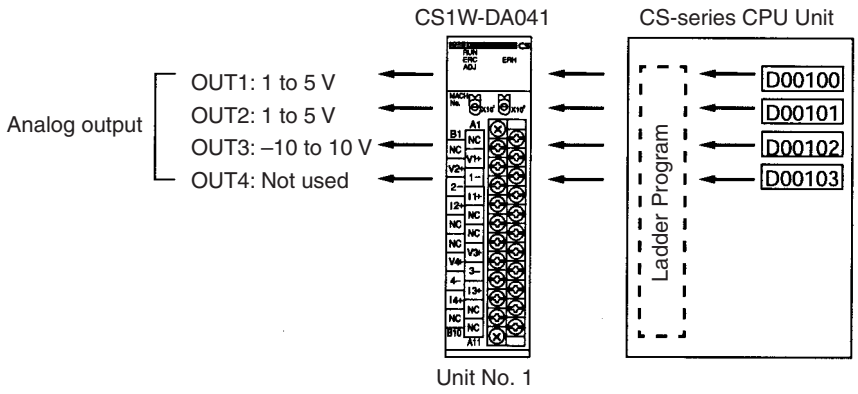

Setting the Analog Output Unit

1,2,3...

1. Set the operation mode switch on the rear panel of the Unit. Refer to *5-3-3 Operation Mode Switch* for further details.

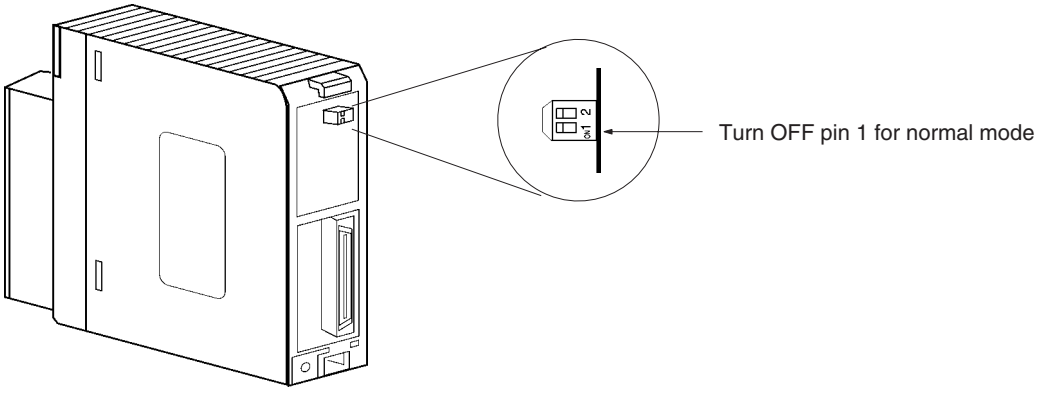

2. Mount and wire the Analog Output Unit. Refer to *1-2-1 Mounting Procedure*, *5-4 Wiring* or *5-4-3 Output Wiring Example* for further details.

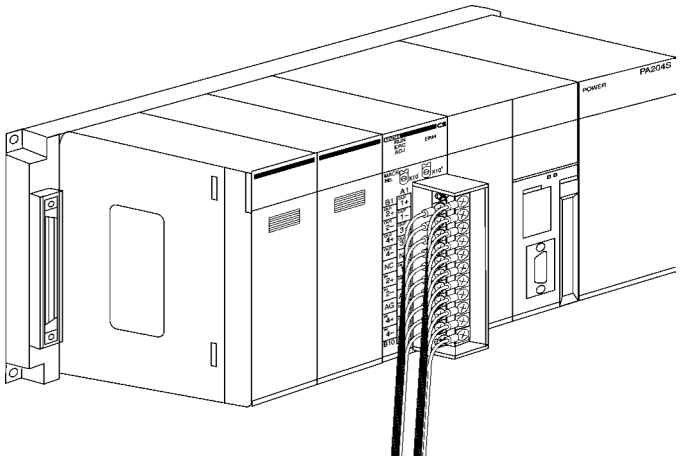

3. Set the unit number switches. Refer to *5-3-2 Unit Number Switches* for further details.

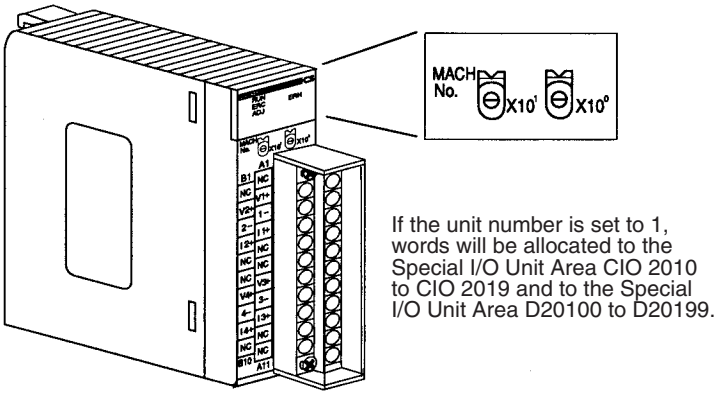

4. Turn ON the power to the PLC.

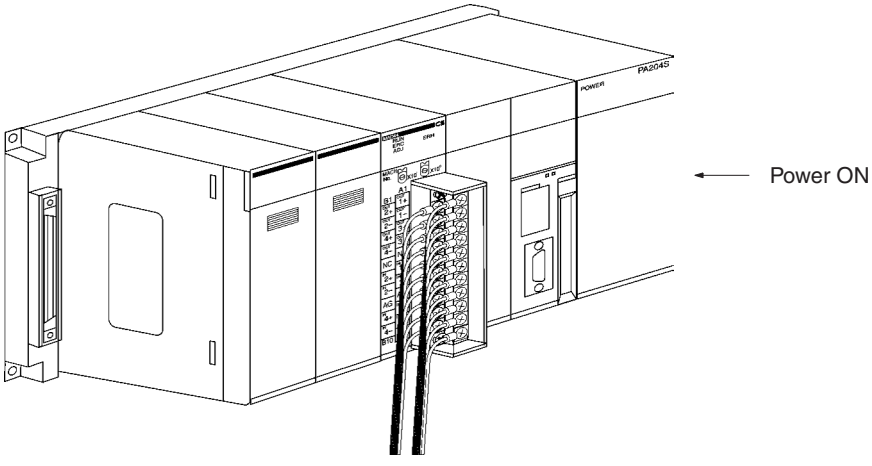

Creating I/O Tables

After turning ON the power to the PLC, be sure to create the I/O tables.

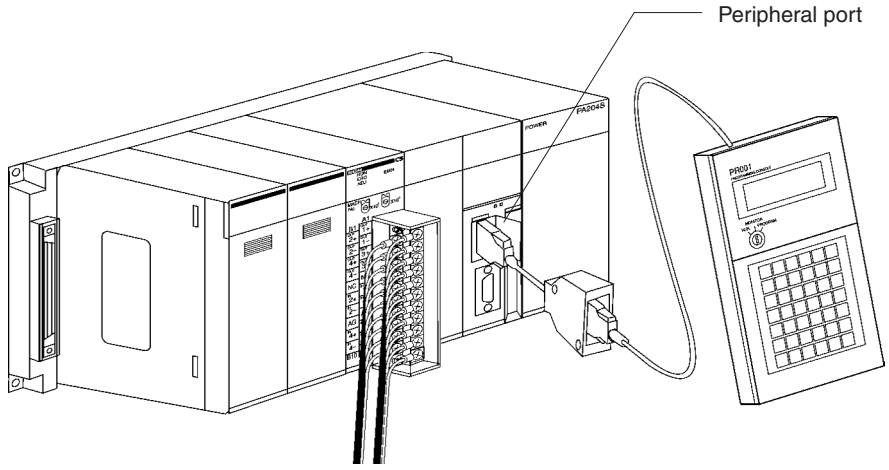

Initial Data Settings

1,2,3... 1. Specify the Special I/O Unit settings in the DM Area. Refer to *DM Allocation Contents* on page 193 for further details.

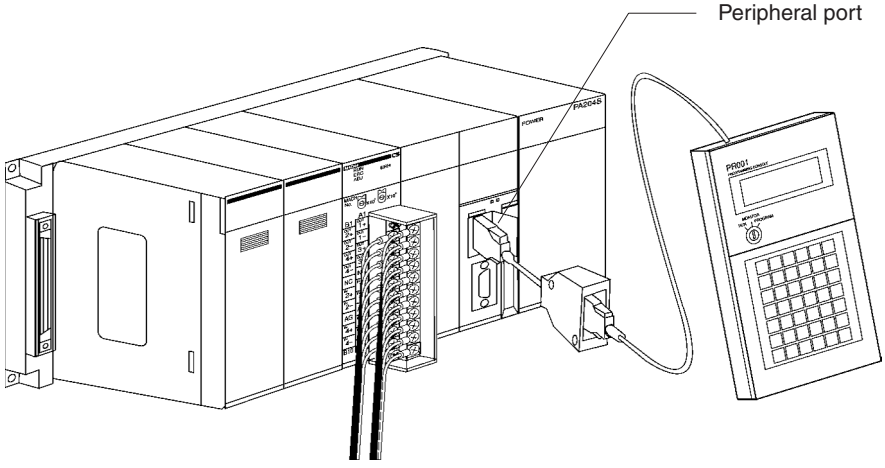

Setting conditions

Unit No. 1

Analog output 1: 1 to 5 V
Analog output 2: 1 to 5 V
Analog output 3: –10 to 10 V
Analog output 4: Not used.

- The following diagram shows the output settings used. Refer to *5-6-1 Output Settings and Conversions* for more details.

Bit	15	14	13	12	11	10	09	08	07	06	05	04	03	02	01	00
m: DM20100 (0007 hex)	0	0	0	0	0	0	0	0	0	0	0	0	0	1	1	1

Not used — Output 4
Used — Output 3, Output 2, Output 1

- The following diagram shows the output range settings. Refer to *5-6-1 Output Settings and Conversions* for more details.

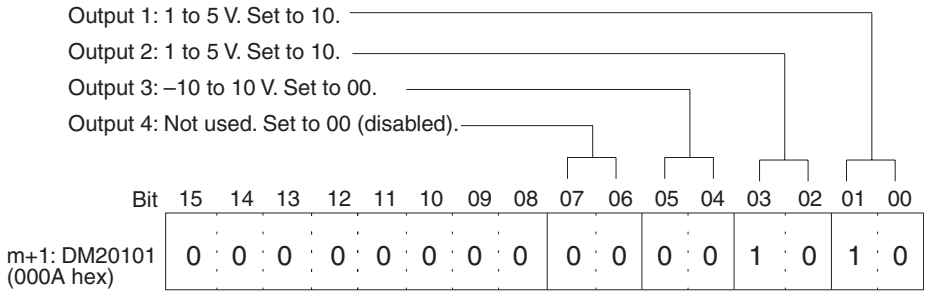

2. Restart the CPU Unit.

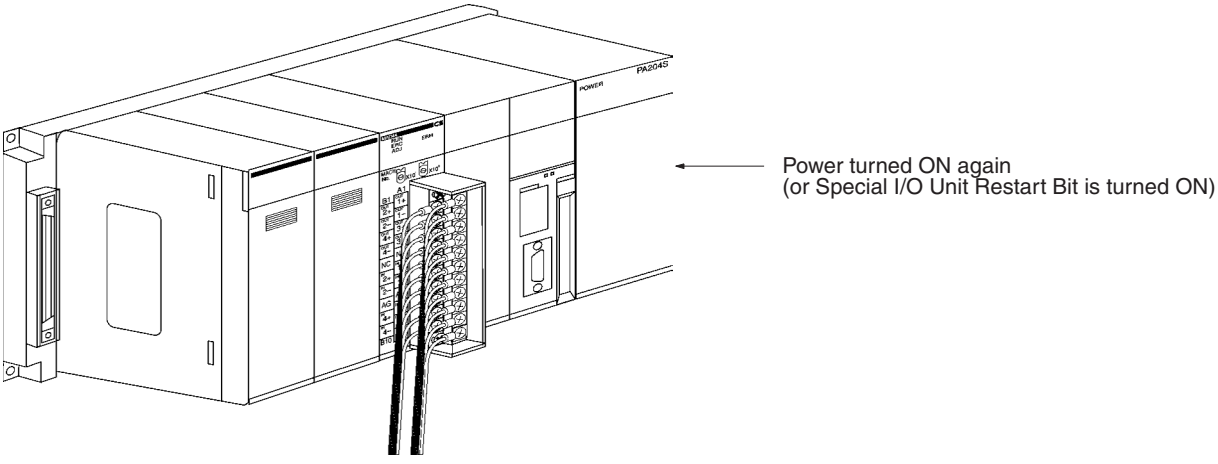

Creating Ladder Programs

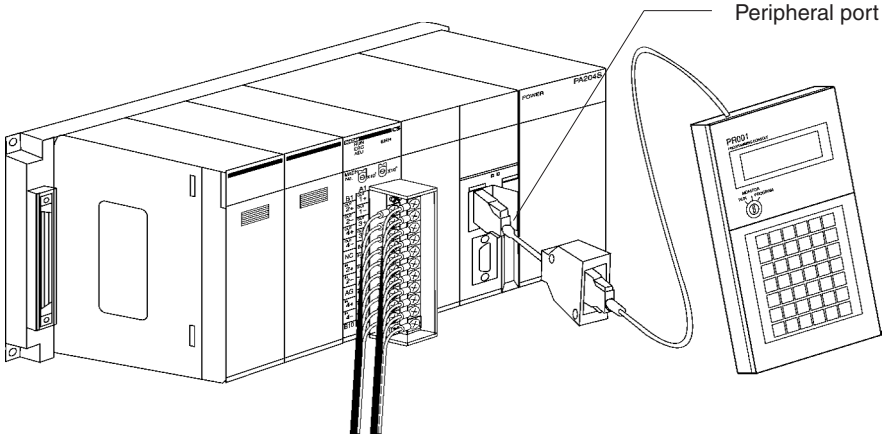

The setting address D00200 is stored in words (n + 1) to (n + 3) of the Special I/O Unit Area (CIO 2011 to CIO 2013) as a signed binary value between 0000 to 0FA0 hex.

The following table shows the addresses used for analog output.

Output number	Output signal range	Address of output set value (n = CIO 2010) See note 1.	Conversion source address
1	1 to 5 V	(n+1) = CIO 2011	D00200
2	0 to 10 V	(n+2) = CIO 2012	D00201
3	–10 to 10 V	(n+3) = CIO 2013	D00202
4	Not used.	---	---

Note

1. The addresses are determined by the unit number of the Special I/O Unit. Refer to *5-3-2 Unit Number Switches* for further details.
2. Set as required.

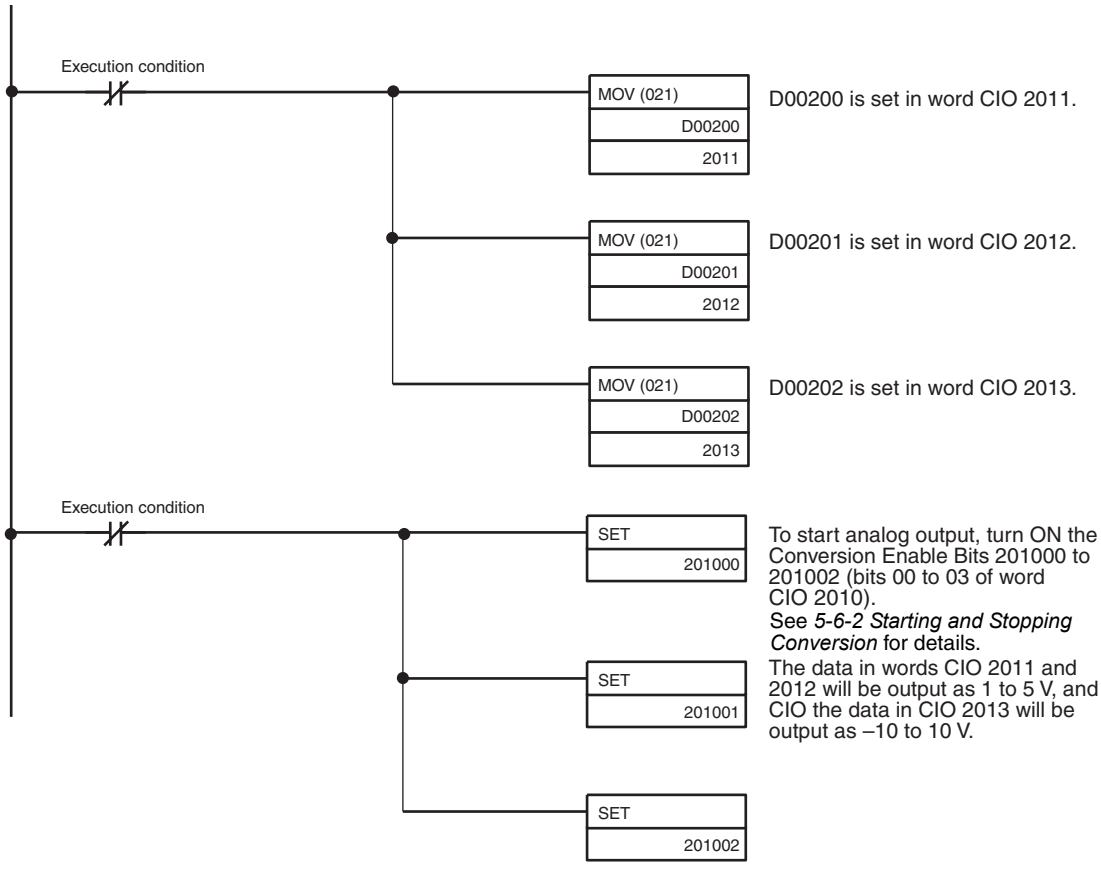

5-3 Components and Switch Settings

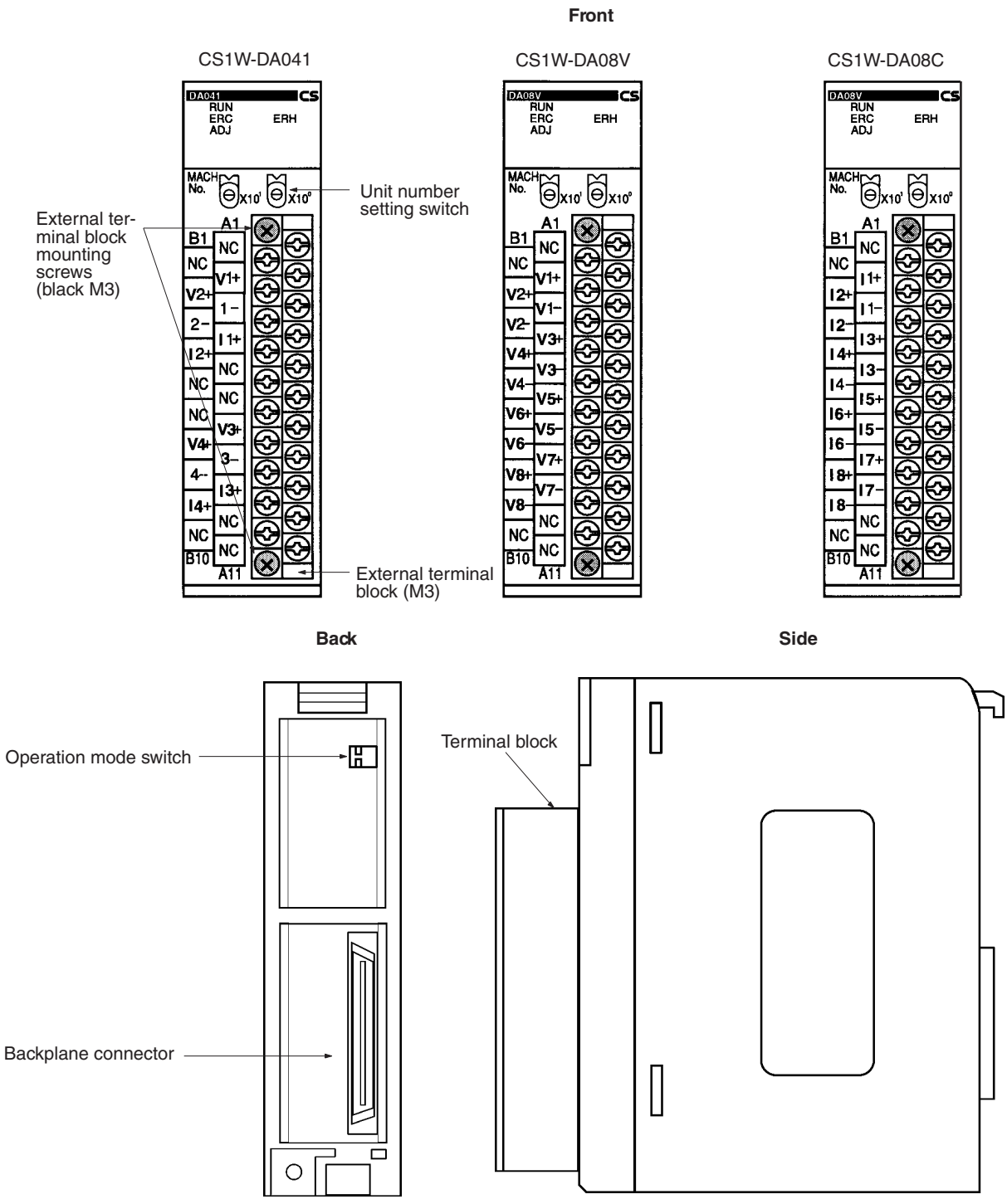

The terminal block is attached using a connector. It can be removed by loosening the two black mounting screws located at the top and bottom of the terminal block.

Check to be sure that the black terminal block mounting screw is securely tightened to a torque of 0.5 N·m.

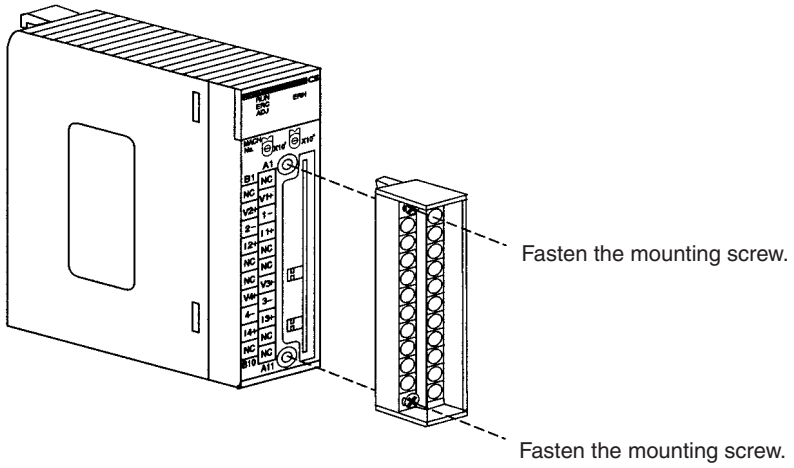

5-3-1 Indicators

The indicators show the operating status of the Unit. The following table shows the meanings of the indicators.

Indicator	Meaning	Indicator status	Operating status
RUN (green)	Operating	Lit	Operating in normal mode.
		Not lit	Unit has stopped exchanging data with the CPU Unit.
ERC (red)	Error detected by Unit	Lit	Alarm has occurred (such as disconnection detection) or initial settings are incorrect.
		Not lit	Operating normally.
ADJ (yellow)	Adjusting	Flashing	Operating in offset/gain adjustment mode.
		Not lit	Other than the above.
ERH (red)	Error in the CPU Unit	Lit	Error has occurred during data exchange with the CPU Unit.
		Not lit	Operating normally.

5-3-2 Unit Number Switches

The CPU Unit and Analog Output Unit exchange data via the Special I/O Unit Areas in the CIO Area and DM Area. The words that are allocated to each Analog Output Unit in the Special I/O Unit Areas in the CIO Area and DM Area are determined by the setting of the unit number switches on the front panel of the Unit.

Always turn OFF the power before setting the unit number. Use a flat-blade screwdriver, being careful not to damage the slot in the screw. Be sure not to leave the switch midway between settings

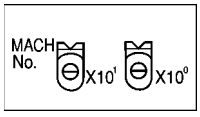

Switch setting	Unit number	Words allocated in Special I/O Unit Area in CIO Area	Words allocated in Special I/O Unit Area in DM Area
0	Unit #0	CIO 2000 to CIO 2009	D20000 to D20099
1	Unit #1	CIO 2010 to CIO 2019	D20100 to D20199
2	Unit #2	CIO 2020 to CIO 2029	D20200 to D20299
3	Unit #3	CIO 2030 to CIO 2039	D20300 to D20399
4	Unit #4	CIO 2040 to CIO 2049	D20400 to D20499
5	Unit #5	CIO 2050 to CIO 2059	D20500 to D20599
6	Unit #6	CIO 2060 to CIO 2069	D20600 to D20699
7	Unit #7	CIO 2070 to CIO 2079	D20700 to D20799
8	Unit #8	CIO 2080 to CIO 2089	D20800 to D20899
9	Unit #9	CIO 2090 to CIO 2099	D20900 to D20999
10	Unit #10	CIO 2100 to CIO 2109	D21000 to D21099
to	to	to	to
n	Unit #n	CIO 2000 + (n × 10) to CIO 2000 + (n × 10) + 9	D20000 + (n × 100) to D20000 + (n × 100) + 99
to	to	to	to
95	Unit #95	CIO 2950 to CIO 2959	D29500 to D29599

Note If two or more Special I/O Units are assigned the same unit number, a “UNIT No. DPL ERR” error (in the Programming Console) will be generated (A40113 will turn ON) and the PLC will not operate.

5-3-3 Operation Mode Switch

The operation mode switch on the back panel of the Unit is used to set the operation mode to either normal mode or adjustment mode (for adjusting off-set and gain).

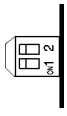

Pin number		Mode
1	2	
OFF	OFF	Normal mode
ON	OFF	Adjustment mode

⚠ **Caution** Do not set the pins to any combination other than those shown in the above table. Be sure to set pin 2 to OFF.

⚠ **Caution** Be sure to turn OFF the power to the PLC before installing or removing the Unit.

5-4 Wiring

5-4-1 Terminal Arrangement

The signal names corresponding to the connecting terminals are as shown in the following diagram.

CS1W-DA08V/08C

N.C.	B1	A1	N.C.
Output 2 (+)	B2	A2	Output 1 (+)
Output 2 (–)	B3	A3	Output 1 (–)
Output 4 (+)	B4	A4	Output 3 (+)
Output 4 (–)	B5	A5	Output 3 (–)
Output 6 (+)	B6	A6	Output 5 (+)
Output 6 (–)	B7	A7	Output 5 (–)
Output 8 (+)	B8	A8	Output 7 (+)
Output 8 (–)	B9	A9	Output 7 (–)
N.C.	B10	A10	N.C.
		A11	N.C.

CS1W-DA041

N.C.	B1	A1	N.C.
Output voltage 2 (+)	B2	A2	Output voltage 1 (+)
Output 2 (–)	B3	A3	Output 1 (–)
Output current 2 (+)	B4	A4	Output current 1 (+)
N.C.	B5	A5	N.C.
N.C.	B6	A6	N.C.
Output voltage 4 (–)	B7	A7	Output voltage 3 (+)
Output 4 (–)	B8	A8	Output 3 (–)
Output current 4 (+)	B9	A9	Output current 3 (+)
N.C.	B10	A10	N.C.
		A11	N.C.

Note

1. The number of analog outputs that can be used is set in the DM Area.
2. The output signal ranges for individual outputs are set in the DM Area. The output signal range can be set separately for each output.
3. The N.C. terminals are not connected to internal circuitry.
4. Recommend using OMRON power supply for the external power source.

5-4-2 Internal Circuitry

The following diagrams show the internal circuitry of the analog output section.

Voltage Output Circuitry

Voltage output section for CS1W-DA08V/DA041

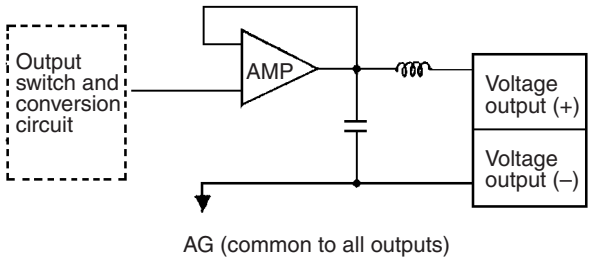

Current Output Circuitry

Current output section for CS1W-DA08C/DA041

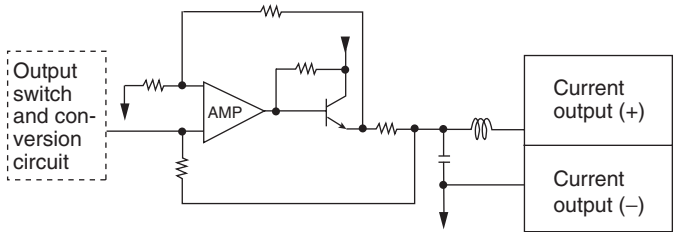

Internal Configuration

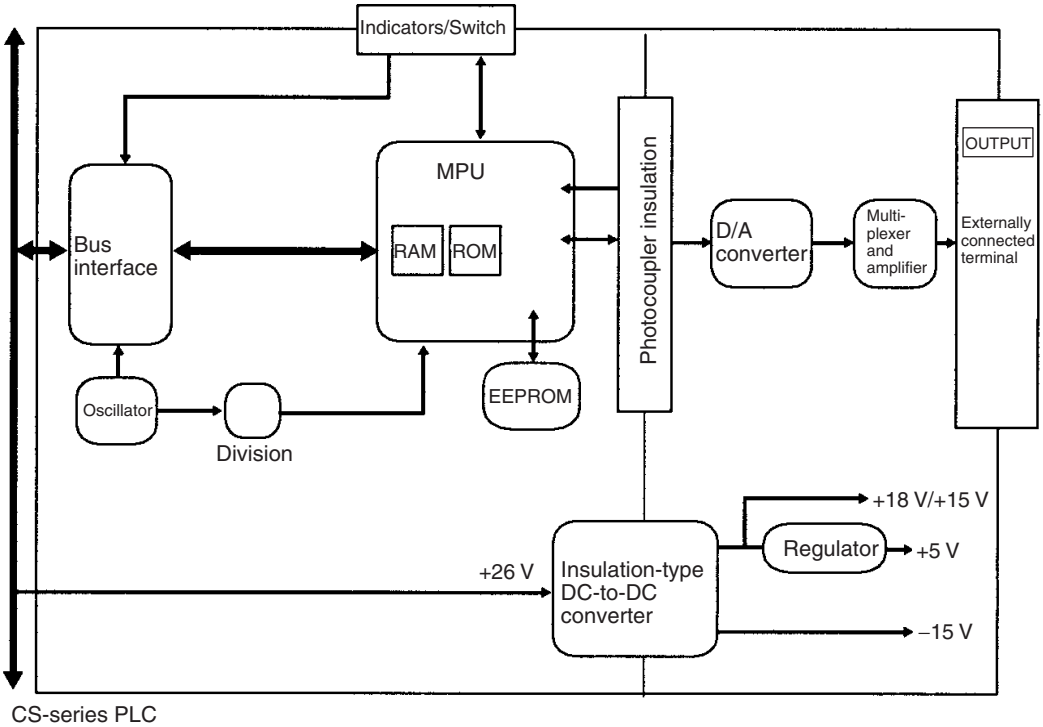

CS-series PLC

5-4-3 Output Wiring Example

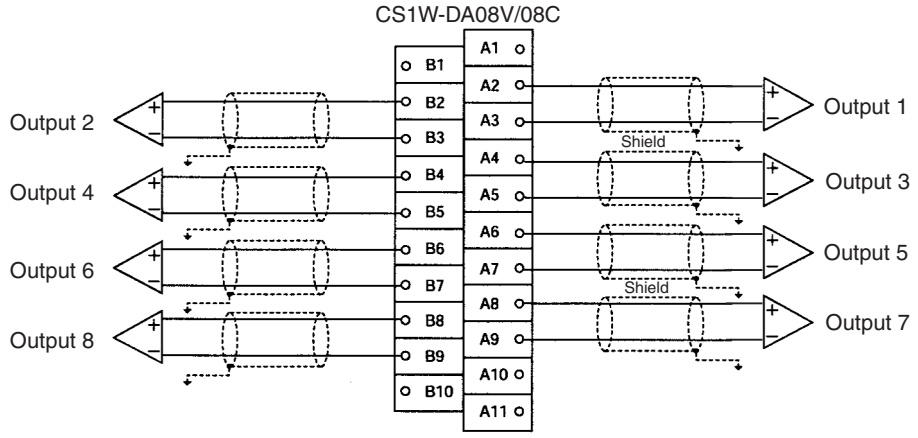

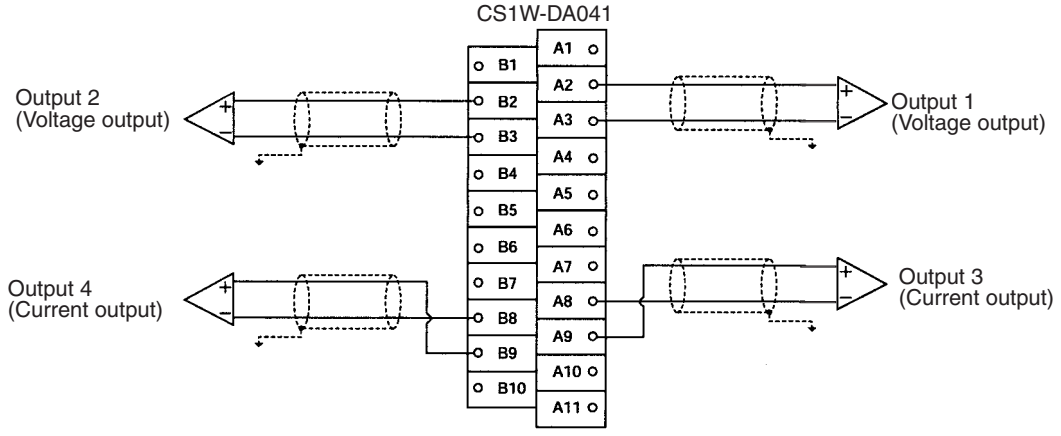

Note Crimp terminals must be used for terminal connections, and the screws must be tightened securely. M3 terminal screws are used. The applicable tightening torque is 0.5 N·m.

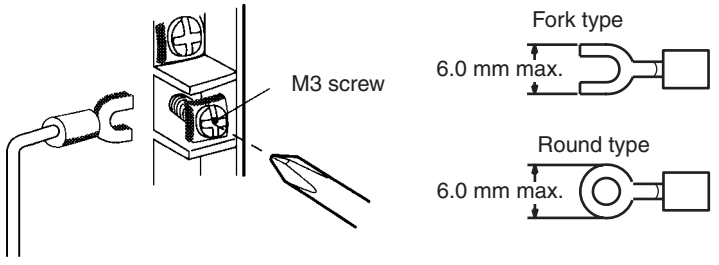

To minimize output wiring noise, ground the output signal line to the input device.

5-4-4 Output Wiring Considerations

When wiring outputs, apply the following points to avoid noise interference and optimize Analog Output Unit performance.

- Use two-core shielded twisted-pair cables for output connections.
- Route output cables separately from the AC cable, and do not run the Unit's cables near a main circuit cable or a high voltage cable. Do not insert output cables into the same duct.
- If there is noise interference from power lines (if, for example, the power supply is shared with electrical welding devices or electrical discharge machines, or if there is a high-frequency generation source nearby) install a noise filter at the power supply input area.

5-5 Exchanging Data with the CPU Unit

5-5-1 Outline of Data Exchange

Data is exchanged between the CPU Unit and the CS1W-DA08V/08C/041 Analog Output Unit via the Special I/O Unit Area (for data used to operate the Unit) and the Special I/O Unit DM Area (for data used for initial settings).

I/O Refresh Data

Analog output setting values and other data used to operate the Unit are allocated in the Special I/O Unit Area of the CPU Unit according to the unit number, and are exchanged during I/O refreshing.

Fixed Data

The Unit's fixed data, such as the analog output signal ranges and the output status when conversion is stopped, is allocated in the Special I/O Unit DM Area of the CPU Unit according to the unit number, and is exchanged when the power is turned ON or the Unit is restarted.

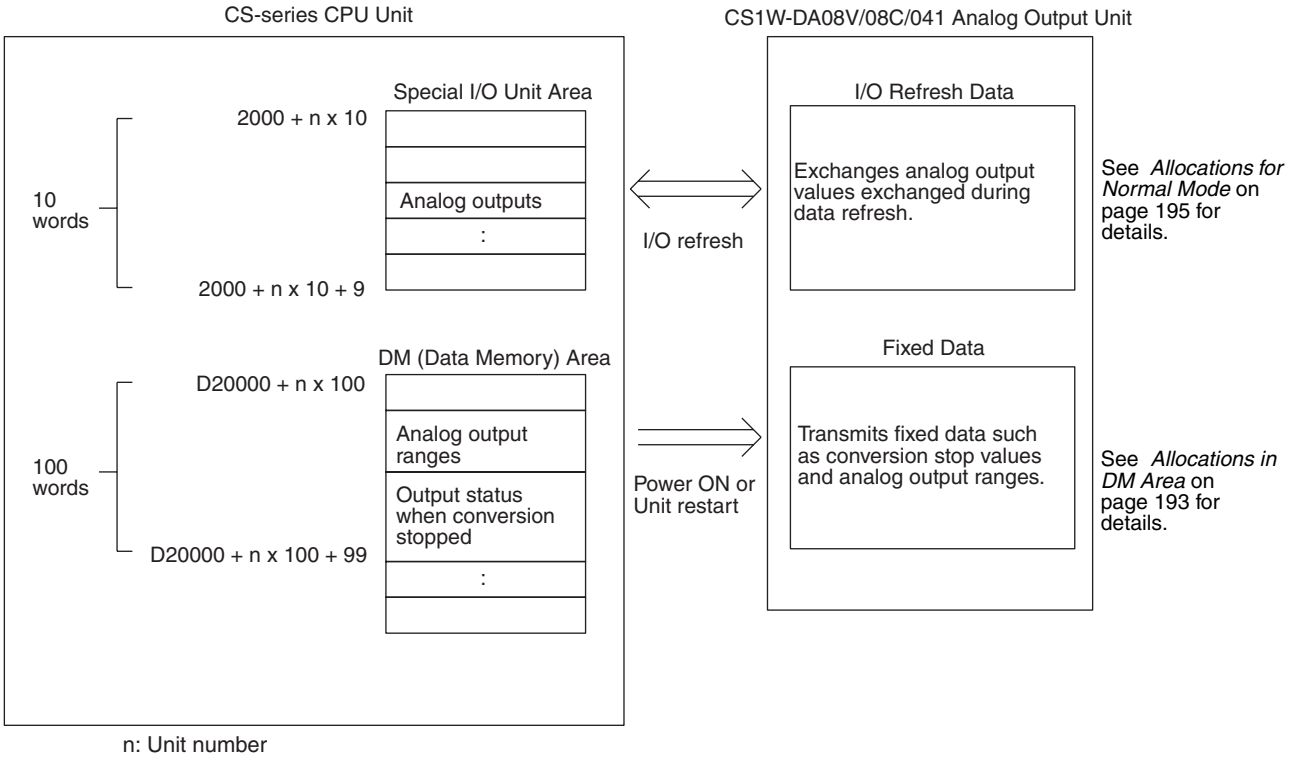

5-5-2 Unit Number Settings

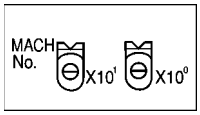

The words in the Special I/O Unit Areas in the CIO Area and DM Area that are allocated to each Analog Output Unit are determined by the setting of the unit number switches on the front panel of the Unit.

Switch setting	Unit number	Words allocated in Special I/O Unit Area in CIO Area	Words allocated in Special I/O Unit Area in DM Area
0	Unit #0	CIO 2000 to CIO 2009	D20000 to D20099
1	Unit #1	CIO 2010 to CIO 2019	D20100 to D20199
2	Unit #2	CIO 2020 to CIO 2029	D20200 to D20299
3	Unit #3	CIO 2030 to CIO 2039	D20300 to D20399
4	Unit #4	CIO 2040 to CIO 2049	D20400 to D20499
5	Unit #5	CIO 2050 to CIO 2059	D20500 to D20599
6	Unit #6	CIO 2060 to CIO 2069	D20600 to D20699
7	Unit #7	CIO 2070 to CIO 2079	D20700 to D20799
8	Unit #8	CIO 2080 to CIO 2089	D20800 to D20899
9	Unit #9	CIO 2090 to CIO 2099	D20900 to D20999
10	Unit #10	CIO 2100 to CIO 2109	D21000 to D21099
to	to	to	to
n	Unit #n	CIO 2000 + (n × 10) to CIO 2000 + (n × 10) + 9	D20000 + (n × 100) to D20000 + (n × 100) + 99
to	to	to	to
95	Unit #95	CIO 2950 to CIO 2959	D29500 to D29599

Note If two or more Special I/O Units are assigned the same unit number, a “UNIT No. DPL ERR” error (in the Programming Console) will be generated (A40113 will turn ON) and the PLC will not operate.

5-5-3 Special I/O Unit Restart Bits

To restart the Unit operations after changing the contents of the data memory or correcting an error, turn ON the power to the PLC again or turn the Special I/O Unit Restart Bit ON and then OFF again.

Special I/O Unit Area word address	Function	
A50200	Unit No. 0 Restart Bit	Restarts the Unit when turned ON and then OFF again.
A50201	Unit No. 1 Restart Bit	
to	to	
A50215	Unit No. 15 Restart Bit	
A50300	Unit No. 16 Restart Bit	
to	to	
A50715	Unit No. 95 Restart Bit	

Note Replace the Unit if the error is not cleared even though the power supply is cycled or the Restart Bit is turned ON.

5-5-4 Fixed Data Allocations

Allocations in DM Area

The initial settings of the Analog Output Unit are set according to the data allocated in the Special I/O Unit Area in the DM Area. Settings, such as the outputs used, and the analog output signal ranges must be set in this area.

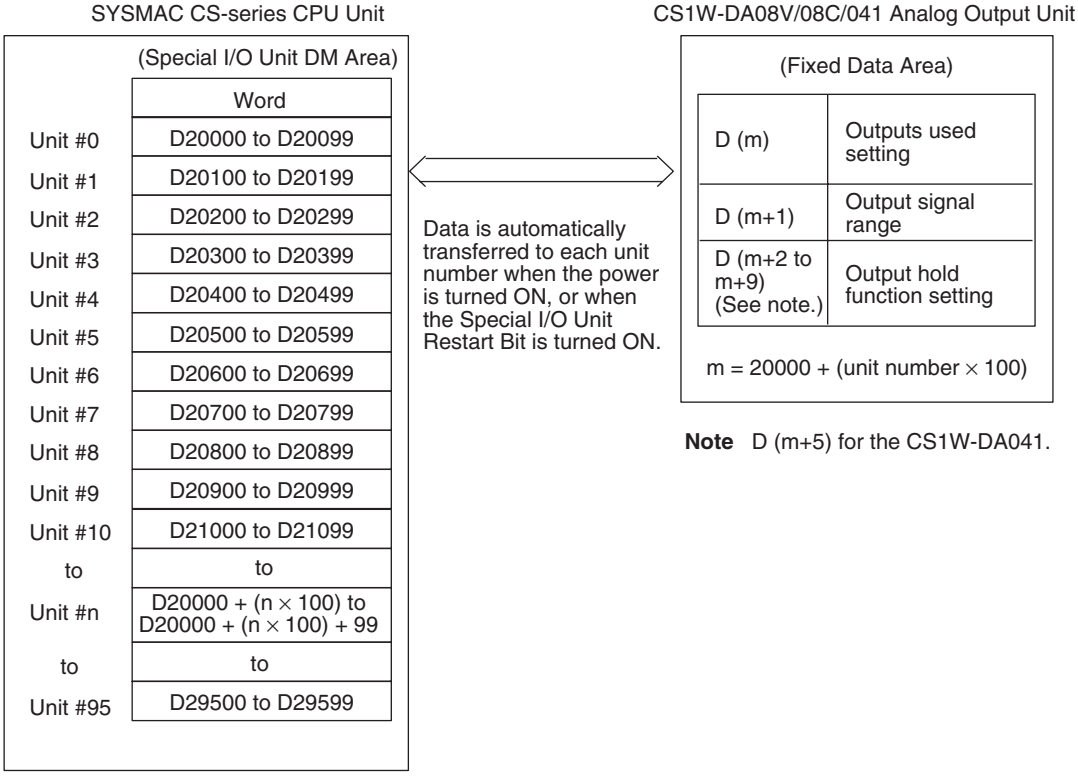

Note

1. The words in the Special I/O Unit Area in the DM Area that are allocated to the Analog Output Unit are set using the unit number switches on the front panel of the Unit. Refer to *5-3-2 Unit Number Switches* for details on the method used to set the unit number switches.
2. If two or more Special I/O Units are assigned the same unit number, a “UNIT No. DPL ERR” error (in the Programming Console) will be generated (A40113 will turn ON) and the PLC will not operate.

Allocations in DM Area

The following table shows the allocation of DM words and bits for both normal and adjustment mode.

CS1W-DA08V/08C

DM Area word	Bits															
	15	14	13	12	11	10	9	8	7	6	5	4	3	2	1	0
D (m)	Not used.								Output use setting							
									Output 8	Output 7	Output 6	Output 5	Output 4	Output 3	Output 2	Output 1
D (m+1)	Output signal range setting															
	Output 8		Output 7		Output 6		Output 5		Output 4		Output 3		Output 2		Output 1	
D (m+2)	Not used.								Output 1: Output status when conversion stopped							
D (m+3)	Not used.								Output 2: Output status when conversion stopped							
D (m+4)	Not used.								Output 3: Output status when conversion stopped							
D (m+5)	Not used.								Output 4: Output status when conversion stopped							
D (m+6)	Not used.								Output 5: Output status when conversion stopped							
D (m+7)	Not used.								Output 6: Output status when conversion stopped							
D (m+8)	Not used.								Output 7: Output status when conversion stopped							
D (m+9)	Not used.								Output 8: Output status when conversion stopped							

CS1W-DA041

DM Area word	Bits															
	15	14	13	12	11	10	9	8	7	6	5	4	3	2	1	0
D (m)	Not used.								Not used.				Output use setting			
													Output 4	Output 3	Output 2	Output 1
D (m+1)	Not used.								Output signal range setting							
									Output 4		Output 3		Output 2		Output 1	
D (m+2)	Not used.								Output 1: Output status when conversion stopped							
D (m+3)	Not used.								Output 2: Output status when conversion stopped							
D (m+4)	Not used.								Output 3: Output status when conversion stopped							
D (m+5)	Not used.								Output 4: Output status when conversion stopped							

Note For the DM word addresses, m = D20000 + (unit number × 100).

Set Values and Stored Values]

Item		Contents	Page
Output	Use setting	0: Not used. 1: Used.	193, 197
	Output signal range	00: –10 to 10 V 01: 0 to 10 V 10: 1 to 5 V/4 to 20 mA (See note 1.) 11: 0 to 5 V	193, 197
	Output status when stopped	00: CLR Outputs 0 or minimum value of each range. (See note 2.) 01: HOLD Holds output just before stopping. 02: MAX Outputs maximum value of range.	199

Note 1. With the CS1W-DA041, the output signal ranges 1 to 5 V and 4 to 20 mA are switched using the output terminal connections. For details, refer to *5-4-3 Output Wiring Example*. With the CS1W-DA08C, these ranges are invalid. Regardless of the settings made, the output range will be 4 to 20 mA. The CS1W-DA08V does not support an output range of 4 to 20 mA.

2. The values output for the signal ranges will be 0 V for the range of ±10 V, and the minimum value for the other ranges. For details, refer to *5-6-3 Output Hold Function*.

5-5-5 I/O Refresh Data Allocations

I/O refresh data for the Analog Output Unit is exchanged according to the allocations in the Special I/O Unit Area.

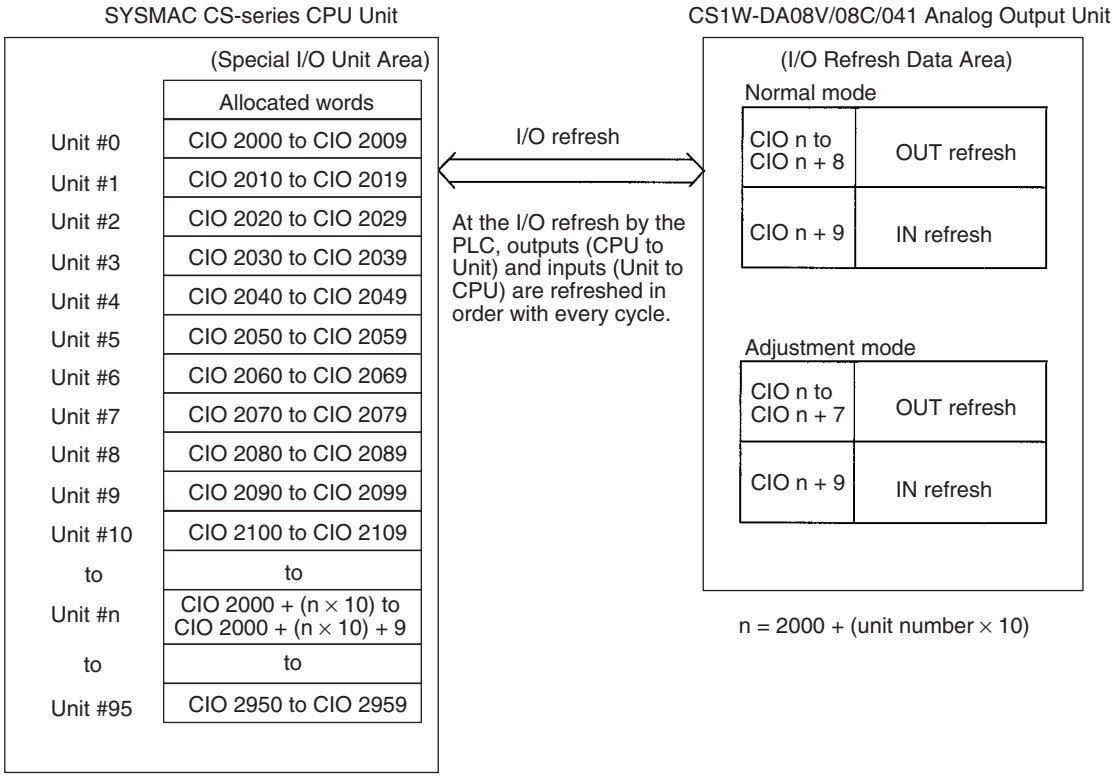

Note 1. The Special I/O Unit Area words that are occupied by the Analog Output Unit are set using the unit number switches on the front panel of the Unit. Refer to *5-3-2 Unit Number Switches* for details on the method used to set the unit number switches.

2. If two or more Special I/O Units are assigned the same unit number, a “UNIT No. DPL ERR” error (in the Programming Console) will be generated (A40113 will turn ON) and the PLC will not operate.

Allocations for Normal Mode

For normal mode, set the operation mode switch on the rear panel of the Unit as shown in the following diagram.

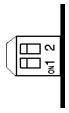

The allocation of words and bits in the CIO Area is shown in the following table.

CS1W-DA08V/08C

I/O	Word	Bits															
		15	14	13	12	11	10	9	8	7	6	5	4	3	2	1	0
Output (CPU to Unit)	n	Not used.								Conversion enable							
										Output 8	Output 7	Output 6	Output 5	Output 4	Output 3	Output 2	Output 1
	n + 1	Output 1 set value															
		16^3				16^2				16^1				16^0			
	n + 2	Output 2 set value															
	n + 3	Output 3 set value															
	n + 4	Output 4 set value															
	n + 5	Output 5 set value															
	n + 6	Output 6 set value															
	n + 7	Output 7 set value															
	n + 8	Output 8 set value															
Input (Unit to CPU)	n + 9	Alarm Flags								Output setting error							
										Output 8	Output 7	Output 6	Output 5	Output 4	Output 3	Output 2	Output 1

CS1W-DA041

I/O	Word	Bits															
		15	14	13	12	11	10	9	8	7	6	5	4	3	2	1	0
Output (CPU to Unit)	n	Not used.								Not used.				Conversion enable			
														Output 4	Output 3	Output 2	Output 1
	n + 1	Output 1 set value															
		16^3				16^2				16^1				16^0			
	n + 2	Output 2 set value															
	n + 3	Output 3 set value															
	n + 4	Output 4 set value															
	n + 5	Not used.															
	n + 6	Not used.															
	n + 7	Not used.															
	n + 8	Not used.															
Input (Unit to CPU)	n + 9	Alarm Flags								Not used.				Output setting error			
														Output 4	Output 3	Output 2	Output 1

Note For the CIO word addresses, n = CIO 2000 + unit number × 10.

Set Values and Stored Values

Item	Contents	Page
Conversion enable	0: Conversion output stopped. 1: Conversion output begun.	199
Set value	16-bit binary data	198
Output setting error	0: No error 1: Output setting error	201
Alarm Flags	Bits 00 to 03: Output set value error Bits 04 to 09: Not used Bit 10: Output hold setting error Bit 11: Not used Bit 15: Operating in adjustment mode (always 0 in normal mode)	195, 213

Allocation for Adjustment Mode

For adjustment mode, set the operation mode switch on the rear panel of the Unit as shown in the following diagram. When the Unit is set for adjustment mode, the ADJ indicator on the front panel of the Unit will flash.

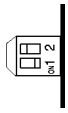

The allocation of CIO words and bits is shown in the following table.

I/O	Word	Bits															
		15	14	13	12	11	10	9	8	7	6	5	4	3	2	1	0
Output (CPU to Unit)	n	Not used.								Outputs to be adjusted							
										1 (fixed)				1 to 8 (See note 2.)			
	n + 1	Not used.								Not used.		Clr	Set	Up	Down	Gain	Off-set
	n + 2	Not used.															
	n + 3	Not used.															
	n + 4	Not used.															
	n + 5	Not used.															
	n + 6	Not used.															
	n + 7	Not used.															
Input (Unit to CPU)	n + 8	Conversion value or set value at time of adjustment															
		16^3				16^2				16^1				16^0			
	n + 9	Alarm Flags								Not used.							

Note 1. For the CIO word addresses, n = CIO 2000 + (unit number × 10).
2. The range is 1 to 4 for the CS1W-DA04.

Set Values and Stored Values

Refer to *5-7 Adjusting Offset and Gain* or *5-8-2 Alarms Occurring at the Analog Output Unit* for further details.

Item	Contents
Output to be adjusted	Sets output to be adjusted. Leftmost digit: 1 (fixed) Rightmost digit: 1 to 8 (1 to 4 for CS1W-DA041)
Offset (Offset Bit)	When ON, adjusts offset deviation.
Gain (Gain Bit)	When ON, adjusts gain deviation.
Down (Down Bit)	Decrements the adjustment value while ON.
Up (Up Bit)	Increments the adjustment value while ON.
Set (Set Bit)	Sets adjusted value and writes to EEPROM.
Clr (Clear Bit)	Clears adjusted value. (Returns to default status)
Conversion value for adjustment	The conversion value for adjustment is stored as 16 bits of binary data.
Alarm Flags	Bit 12: Not used Bit 13: Output number setting error (in adjustment mode) Bit 14: EEPROM write error (in adjustment mode) Bit 15: Operating in adjustment mode (always 1 in adjustment mode)

5-6 Analog Output Functions and Operating Procedures

5-6-1 Output Settings and Conversions

Output Numbers

The Analog Output Unit converts only analog outputs specified by output numbers 1 to 8 (output numbers 1 to 4 for CS1W-DA041). To specify the analog outputs to be used, turn ON from a Programming Device the D(m) bits in the DM Area shown in the following diagram.

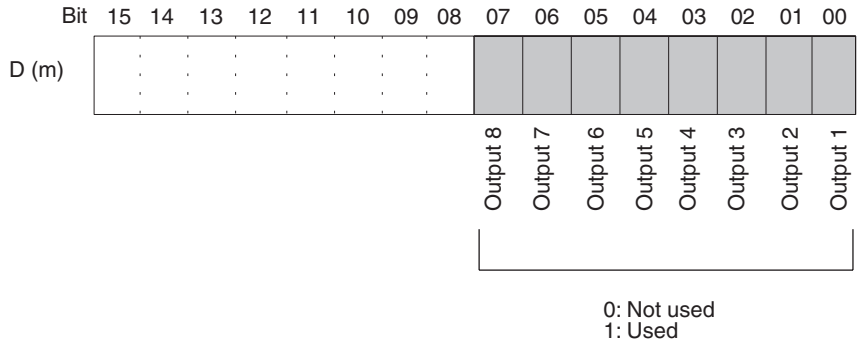

Note There are only four outputs (1 to 4) for the CS1W-DA041.

The analog output conversion cycle can be shortened by setting any unused output numbers to 0.

Conversion cycle = (1 ms) × (Number of outputs used)

Note
1. For the DM word addresses, m = D20000 + (unit number × 100).
2. Output numbers not used (set to 0) will be output at 0 V.

Output Signal Range

Any of four types of output signal range (–10 to 10 V, 0 to 10 V, 1 to 5 V/4 to 20 mA, and 0 to 5 V) can be selected for each of the outputs. To specify the output signal range for each output, use a Programming Device to set the D(m+1) bits in the DM Area shown in the following diagram.

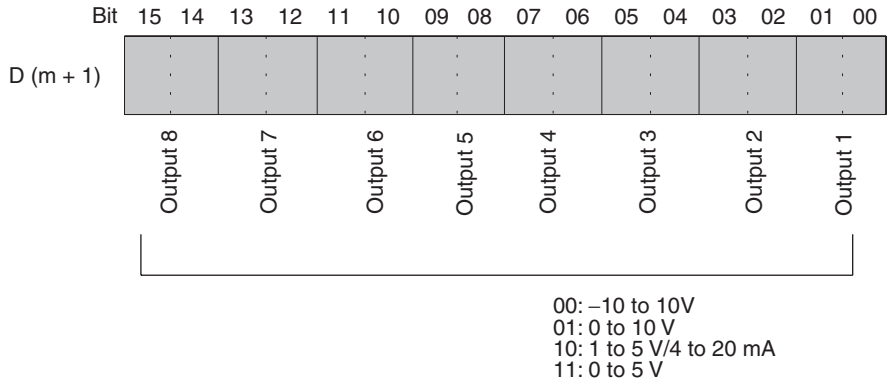

Note

1. For the DM word addresses, m = D20000 + (unit number × 100).
2. With the CS1W-DA041, the 1 to 5 V output range and the 4 to 20 mA output range are switched by changing the terminal connections.
3. There is no 4 to 20 mA output range for the CS1W-DA08V.
4. Output setting range settings for the CS1W-DA08C are invalid. The output signal range will be 4 to 20 mA, regardless of the settings.
5. When data memory settings have been carried out using a Programming Device, be sure to either cycle the power supply to the PLC, or turn ON the Special I/O Unit Restart Bit. The contents of the data memory settings will be transferred to the Special I/O Unit when the power is turned ON or the Special I/O Unit Restart Bit is ON.

Writing Set Values

Analog output set values are written to CIO words (n+1) to (n+8). For the CS1W-DA041, they are written to CIO words (n+1) to (n+4).

Word	Function	Stored value
n+1	Output 1 set value	16-bit binary data
n+2	Output 2 set value	
n+3	Output 3 set value	
n+4	Output 4 set value	
n+5	Output 5 set value	
n+6	Output 6 set value	
n+7	Output 7 set value	
n+8	Output 8 set value	

For the CIO word addresses, n = CIO 2000 + (unit number × 10).

Use MOV(021) or XFER(070) to write values in the user program.

Example 1

In this example, the set value from only one output is written. (The unit number is 0.)

The set value stored in D 00001 is written to CIO word 2001 (output number 1).

Example 2 In this example, multiple set values are written. (The unit number is #0.)

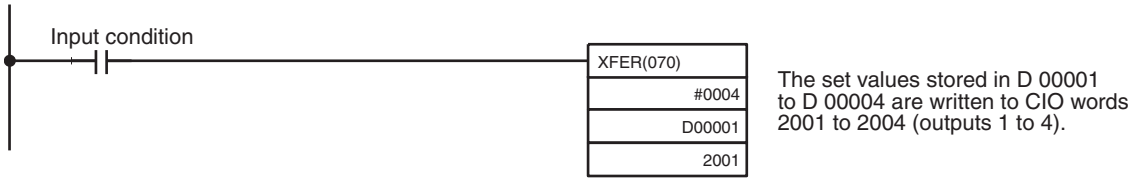

Note If the set value has been written outside the specified range, an output setting error will occur, and the value set by the output hold function will be output.

5-6-2 Starting and Stopping Conversion

To begin analog output conversion, turn ON the corresponding Conversion Enable Bit (word n, bits 00 to 07 for the CS1W-DA08V and CS1W-DA08C; word n, bits 00 to 03 for the CS1W-DA041) from the user's program.

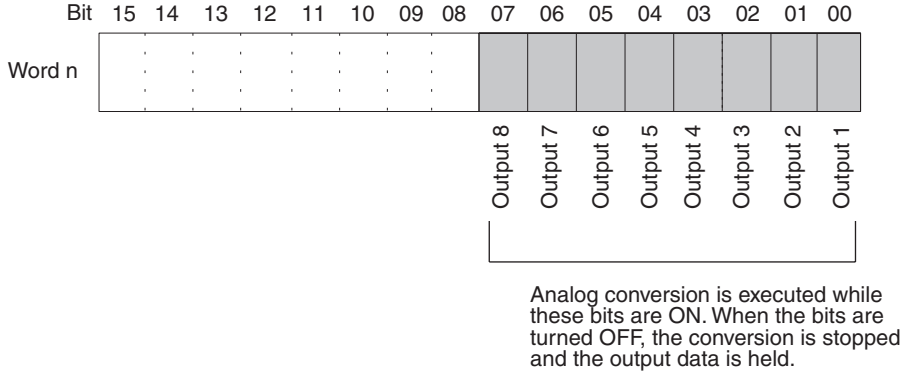

For the CIO word addresses, n = CIO 2000 + (unit number × 10).

The analog output when conversion is stopped will differ depending on the output signal range setting and output hold setting. Refer to *5-6-1 Output Settings and Conversions* and *5-6-3 Output Hold Function*.

Conversion will not begin under the following conditions even if the Conversion Enable Bit is turned ON. Refer to *5-6-3 Output Hold Function*.

1,2,3...

1. In adjustment mode, when something other than the output number is output during adjustment.
2. When there is an output setting error.
3. When a fatal error occurs at the PLC.

When the operation mode for the CPU Unit is changed from RUN mode or MONITOR mode to PROGRAM mode, the Conversion Enable Bits will all turn OFF. They will also turn OFF when the power supply to the PLC is turned ON. The output status at this time depends on the output hold function.

In this example, conversion is begun for analog output number 1. (The unit number is 0.)

5-6-3 Output Hold Function

The Analog Output Unit stops conversion under the following conditions and outputs the value set for the output hold function.

1,2,3...

1. When the Conversion Enable Bit is OFF. Refer to *Allocations for Normal Mode* on page 195 and *5-6-2 Starting and Stopping Conversion*.
2. In adjustment mode, when something other than the output number is output during adjustment. Refer to *Allocation for Adjustment Mode* on page 196.
3. When there is an output setting error. Refer to *Allocations for Normal Mode* on page 195 and *5-6-4 Output Setting Errors*.
4. When a fatal error occurs at the PLC.
5. When there is an I/O bus error.
6. When the CPU Unit is in LOAD OFF status.
7. When there is a WDT (watchdog timer) error in the CPU Unit.

CLR, HOLD, or MAX can be selected for the output status when conversion stops.

Output signal range	CLR	HOLD	MAX
0 to 10 V	–0.5 V (Min. –5% of full scale)	Voltage that was output just prior to stopping.	10.5 V (Max. +5% of full scale)
–10 to 10 V	0.0 V	Voltage that was output just prior to stopping.	11.0 V (Max. +5% of full scale)
1 to 5 V	0.8 V (Min. –5% of full scale)	Voltage that was output just prior to stopping.	5.2 V (Max. +5% of full scale)
0 to 5 V	–0.25 V (Min. –5% of full scale)	Voltage that was output just prior to stopping.	5.25 V (Max. +5% of full scale)
4 to 20 mA	3.2 mA (Min. –5% of full scale)	Current that was output just prior to stopping.	20.8 mA (Max. +5% of full scale)

The above values may fluctuate if offset/gain adjustment has been applied.

To specify the output hold function, use a Programming Device to set the DM Area words D(m+2) to D(m+9) as shown in the following table. (DM Area words D(m+2) to D(m+5) for the CS1W-DA041.)

DM word	Function	Set value
D(m+2)	Output 1: Output status when conversion stops	xx00:CLR Output 0 or minimum value of range (–5%). xx01:HOLD Hold output value prior to stop. xx02: MAX Output maximum value of range (105%). Set any value in the leftmost bytes (xx).
D(m+3)	Output 2: Output status when conversion stops	
D(m+4)	Output 3: Output status when conversion stops	
D(m+5)	Output 4: Output status when conversion stops	
D(m+6)	Output 5: Output status when conversion stops	
D(m+7)	Output 6: Output status when conversion stops	
D(m+8)	Output 7: Output status when conversion stops	
D(m+9)	Output 8: Output status when conversion stops	

For the DM word addresses, m = D20000 + (unit number × 100).

Note When DM Area settings have been carried out using a Programming Device, be sure to either cycle the power supply to the PLC, or turn ON the Special I/O Unit Restart Bit. The contents of the initial settings in the DM Area will be

transferred to the Special I/O Unit when the power is turned ON or the Special I/O Unit Restart Bit is turned ON.

5-6-4 Output Setting Errors

If the analog output set value is greater than the specified range, a setting error signal will be stored in CIO word n+9, bits 00 to 07. (Bits 00 to 03 for the CS1W-DA041.)

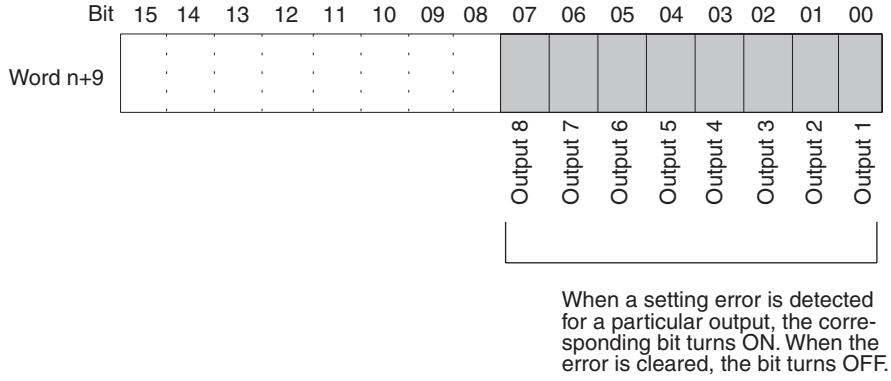

For the CIO word addresses, n = CIO 2000 + (unit number × 10).

The voltage for an output number at which a setting error has occurred will be output according to the output hold function.

5-7 Adjusting Offset and Gain

5-7-1 Adjustment Mode Operational Flow

The adjustment mode enables the output of the connected devices to be calibrated.

This function adjusts the output voltage according to the offset value and gain value at the input device, and sets the settings values at the Unit at that time to 0000 and 0FA0 (07D0 if the range is ±10 V) respectively.

For example, suppose that the specifications range for the external input device (e.g., indicator, etc.) is 100.0 to 500.0 when using in the range 1 to 5 V. Also, suppose that when voltage is output at the Analog Output Unit at a set value of 0000, the external input device actually displays 100.5 and not 100.0. It is possible to make settings to adjust the output voltage (making it smaller in this case) so that 100.0 is displayed and to make 0000 (not FFFB as in this case) the set value for which 100.0 is displayed.

Similarly for gain values, suppose that when voltage is output at the Analog Output Unit at a set value of 0FA0, the external input device actually displays 500.5 and not 500.0. It is possible to make settings to adjust the output voltage (make it smaller in this case) so that 500.0 is displayed and to make 0FA0 (not 0F9B as in this case) the set value for which 500.0 is displayed.

External input device display	Set value before adjustment (word n+8)	Set value after adjustment
100.0	FFFB	0000
500.0	0F9B	0FA0

The following diagram shows the flow of operations when using the adjustment mode for adjusting offset and gain.

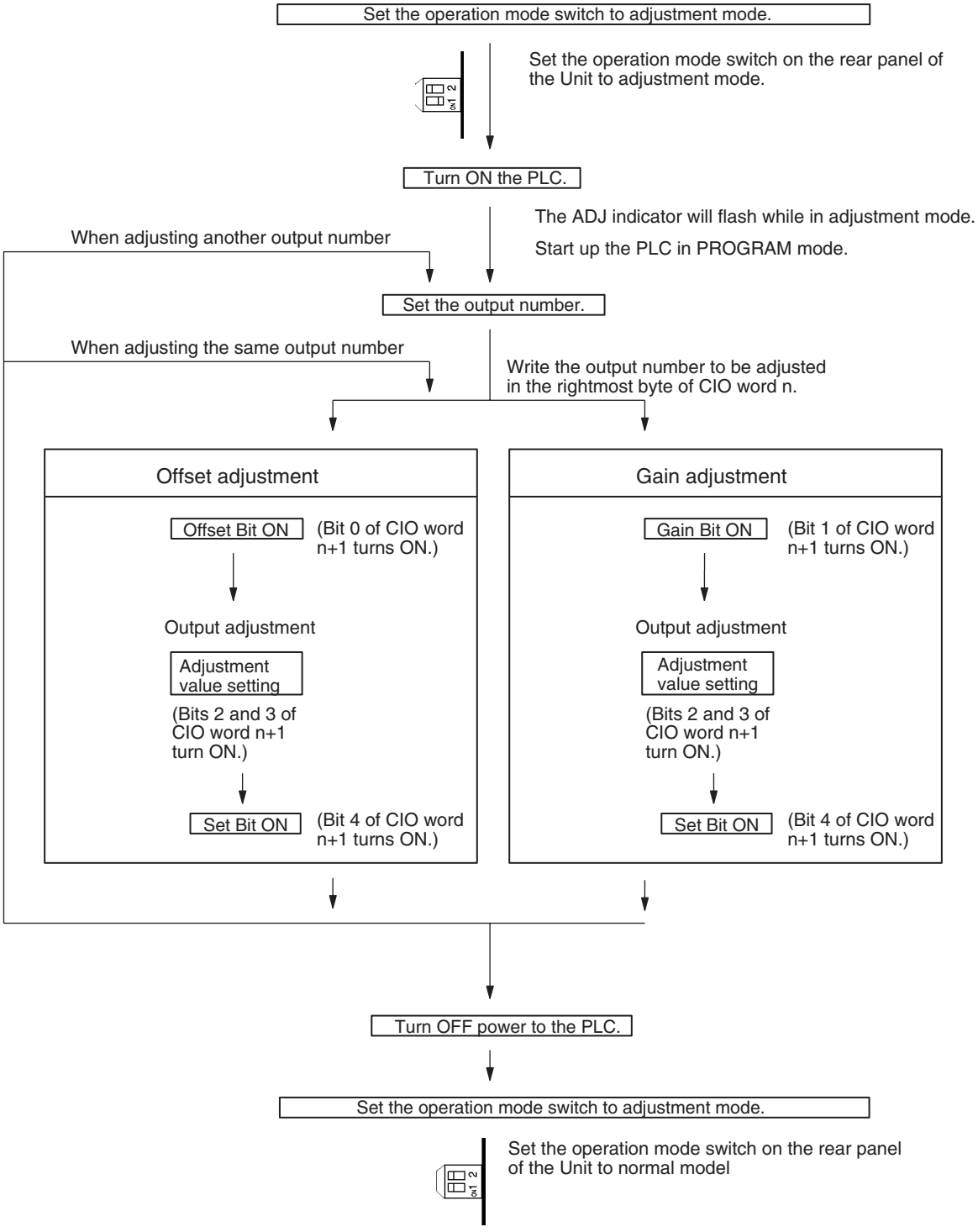

⚠ **Caution** Be sure to turn OFF the power to the PLC before changing the setting of the operation mode switch.

⚠ **Caution** Set the PLC to PROGRAM mode when using the Analog Output Unit in adjustment mode. If the PLC is in MONITOR mode or RUN mode, the Analog Output Unit will stop operating, and the output values that existed immediately before this stoppage will be retained.

⚠ **Caution** Always perform adjustments in conjunction with offset and gain adjustments.

5-7-2 Output Offset and Gain Adjustment Procedures

Specifying Output Number to be Adjusted

To specify the output number to be adjusted, write the value to the rightmost byte of CIO word n as shown in the following diagram.

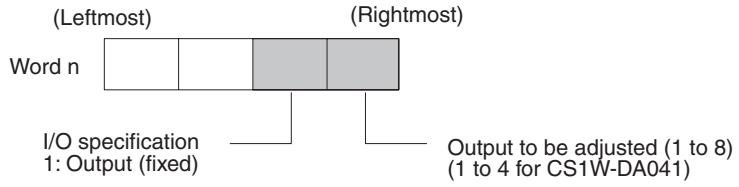

For the CIO word addresses, n = CIO 2000 + unit number x 10.

The following example uses output number 1 adjustment for illustration. (The unit number is 0.)

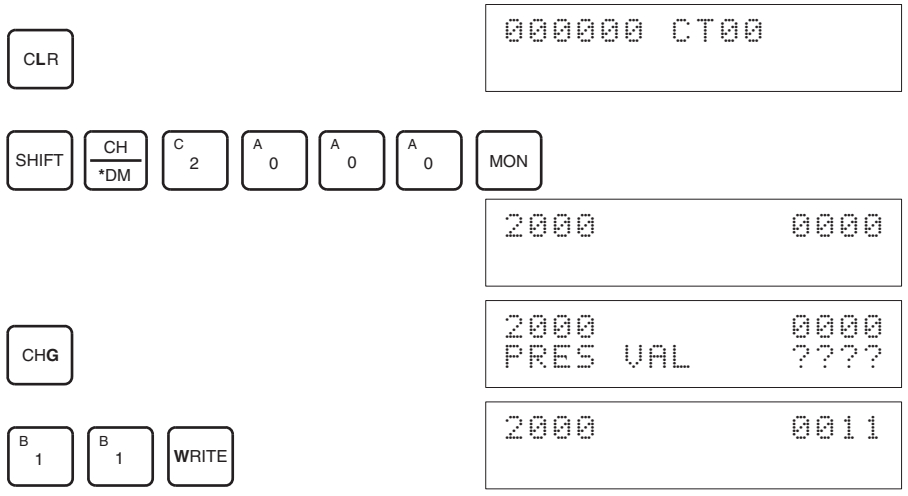

Bits Used for Adjusting Offset and Gain

The CIO word n+1 bits shown in the following diagram are used for adjusting offset and gain.

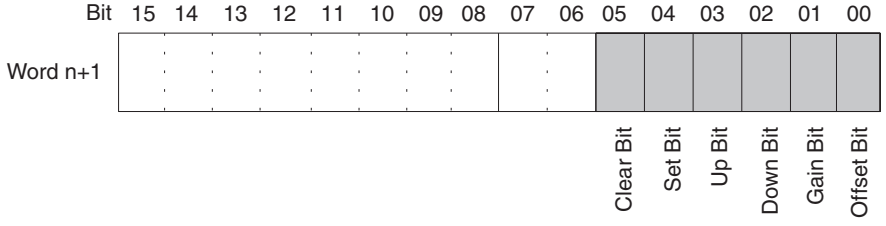

Offset Adjustment

The procedure for adjusting the analog output offset is explained below. As shown in the following diagram, the set value is adjusted so that the analog output reaches the standard value (0 V/1 V/4 mA).

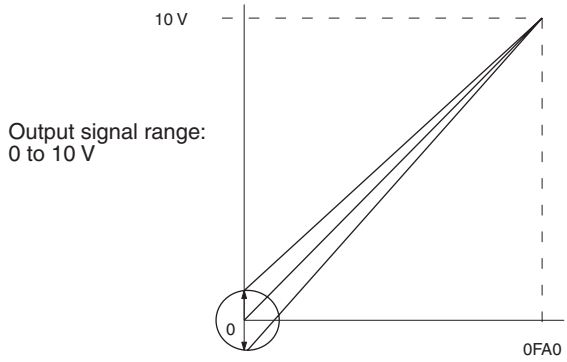

Offset adjustment output range

The following example uses output number 1 adjustment for illustration. (The unit number is 0.)

1,2,3...

1. Turn ON bit 00 (the Offset Bit) of CIO word n+1. (Hold the ON status.)

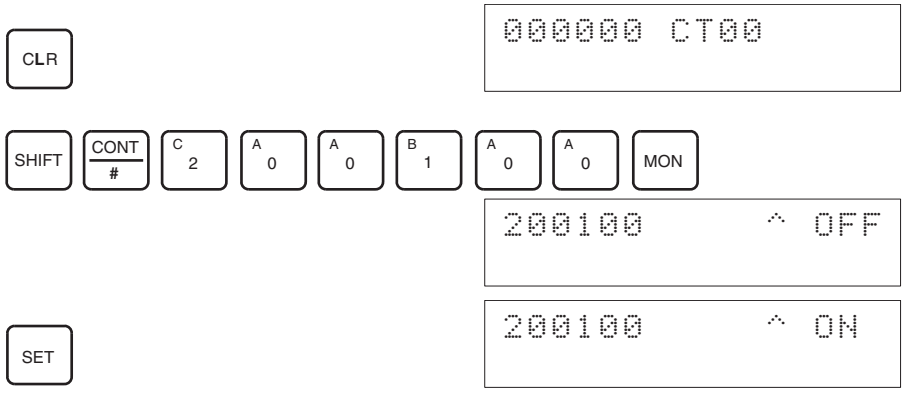

2. Check whether the output devices are connected.

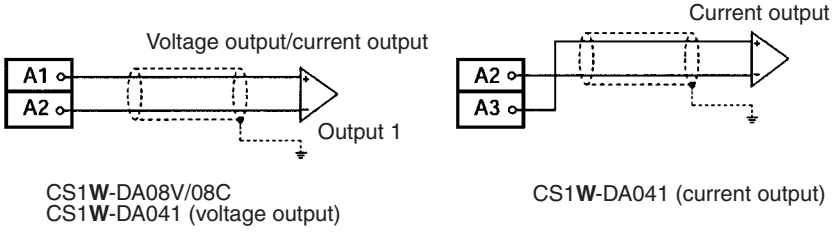

CS1**W**-DA08V/08C
CS1**W**-DA041 (voltage output)

CS1**W**-DA041 (current output)

3. Monitor CIO word n+8 and check the set value while the Offset Bit is ON.

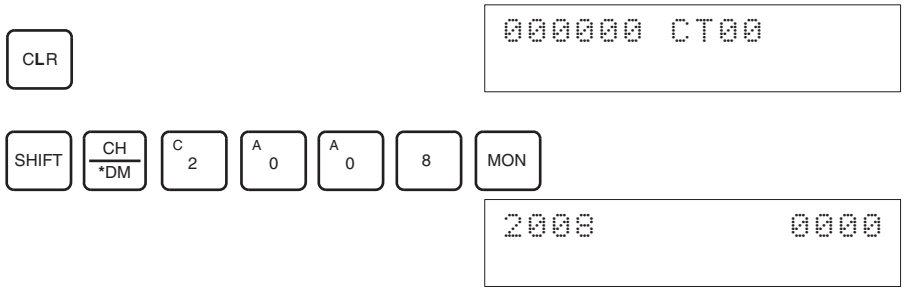

4. Change the set value so that the output voltage are as shown in the following table. The data can be set within the indicated ranges.

Output signal range	Possible output voltage/current adjustment	Output range
0 to 10 V	–0.5 to 0.5 V	FF38 to 00C8
–10 to 10 V	–1.0 to 1.0 V	
1 to 5 V	0.8 to 1.2 V	
0 to 5 V	–0.25 to 0.25 V	
4 to 20 mA	3.2 to 4.8 mA	

Change the set value, using the Up Bit (bit 03 of word n+1) and the Down Bit (bit 02 of word n+1).

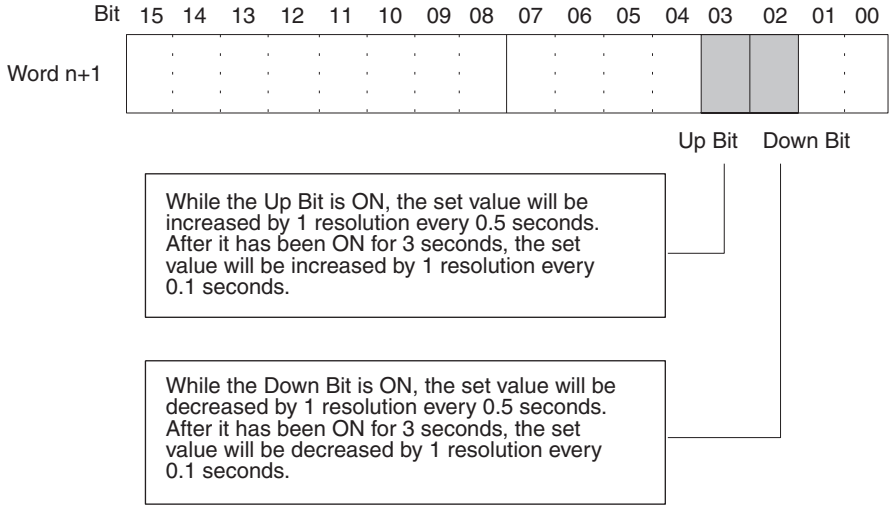

- The following example increases the output voltage.

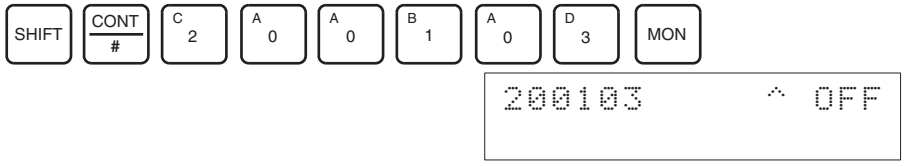

The bit will remain ON until the output becomes an appropriate value, at which time, it will turn OFF.

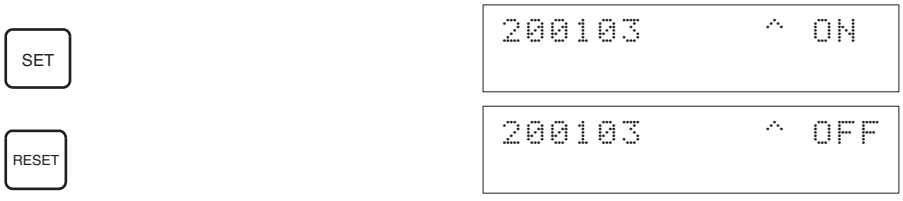

- The following example decreases the output voltage.

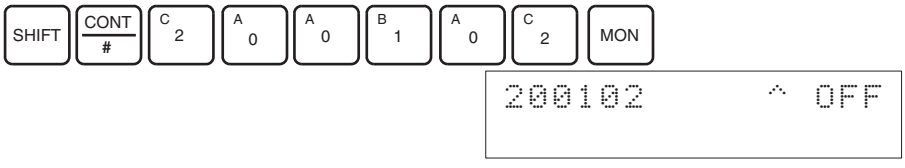

The bit will remain ON until the output becomes an appropriate value, at which time, it will turn OFF.

SET

```
200102      ^ ON
```

RESET

```
200102      ^ OFF
```

5. Check the 0-V/1-V/4-mA output, and then turn bit 04 (the Set Bit) of CIO word n+1 ON and then OFF again.

SHIFT CONT # C 2 A 0 A 0 B 1 A 0 E 4 MON

```
200104      ^ OFF
```

SET

```
200104      ^ ON
```

RESET

```
200104      ^ OFF
```

While the Offset Bit is ON, the offset value will be saved to the Unit's EEPROM when the Set Bit turns ON.

6. To finish the offset adjustment, turn OFF bit 00 (the Offset Bit) of CIO word n+1.

SHIFT CONT # C 2 A 0 A 0 B 1 A 0 A 0 MON

```
200100      ^ ON
```

SET

```
200100      ^ OFF
```

⚠ **Caution** Do not turn OFF the power supply or restart the Unit while the Set Bit is ON (data is being written to the EEPROM). Otherwise, illegal data may be written in the Unit's EEPROM and "EEPROM Errors" may occur when the power supply is turned ON or when the Unit is restarted, causing a malfunction.

⚠ **Caution** When making adjustments, be sure to perform both the offset adjustment and gain adjustment at the same time.

Note The EEPROM can be overwritten 50,000 times.

Gain Adjustment

The procedure for adjusting the analog output gain is explained below. As shown in the following diagram, the set value is adjusted so that the analog output is maximized (to 10 V/5 V/20 mA).

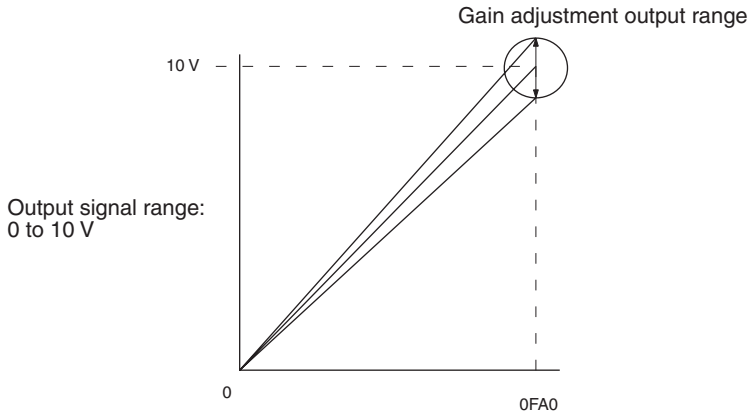

The following example uses output number 1 adjustment for illustration. (The unit number is 0.)

1,2,3... 1. Turn ON bit 01 (the Gain Bit) of CIO word n+1. (Hold the ON status.)

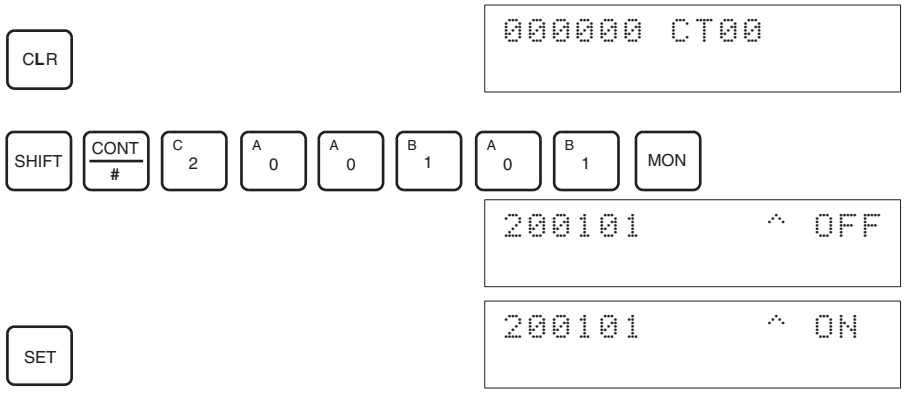

2. Check whether the output devices are connected.

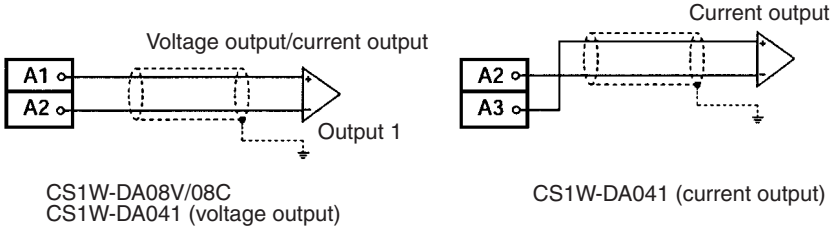

3. Monitor CIO word n+8 and check the set value while the Gain Bit is ON.

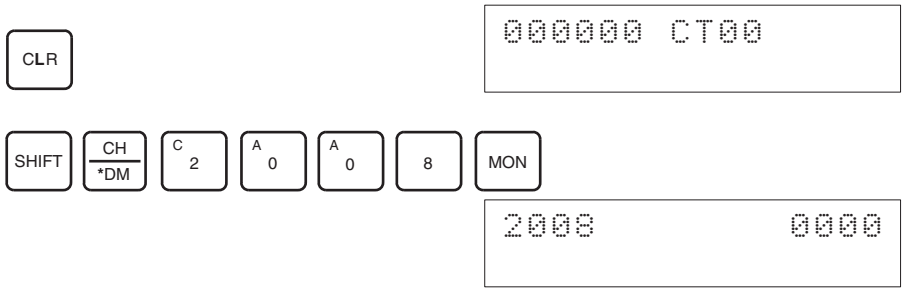

4. Change the set value so that the output voltage is as shown in the following table. The data can be set within the indicated ranges.

Output signal range	Possible output voltage/current adjustment	Output range
0 to 10 V	9.5 to 10.5 V	0ED8 to 1068
–10 to 10 V	9 to 11 V	0708 to 0898
1 to 5 V	4.8 to 5.2 V	0ED8 to 1068
0 to 5 V	4.75 to 5.25 V	0ED8 to 1068
4 to 20 mA	19.2 to 20.8 mA	0ED8 to 1068

Change the set value, using the Up Bit (bit 03 of word n+1) and the Down Bit (bit 02 of word n+1).

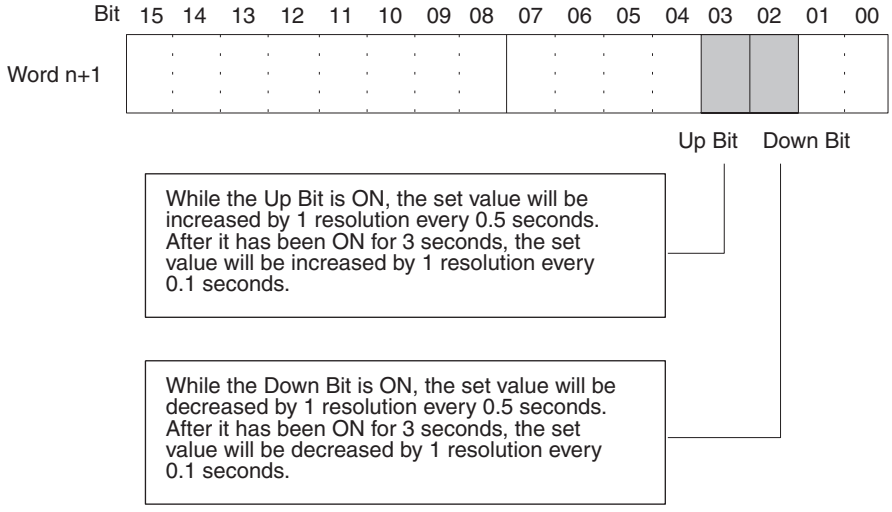

- The following example increases the output voltage.

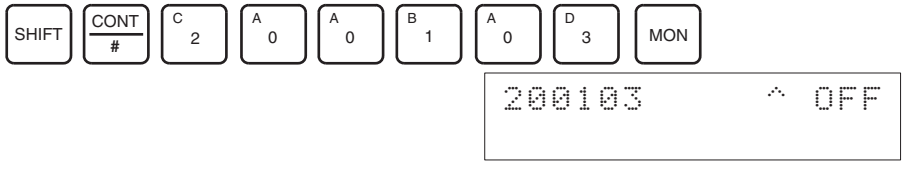

The bit will remain ON until the output voltage becomes an appropriate value, at which time, the output will turn OFF.

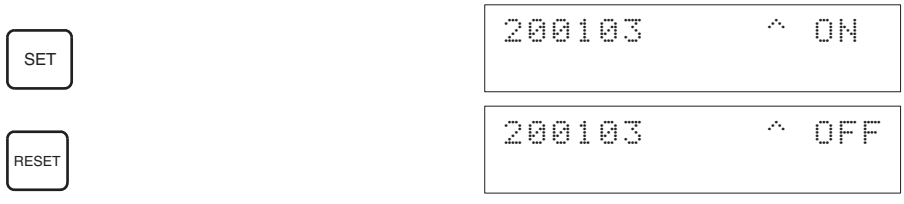

- The following example decreases the output voltage.

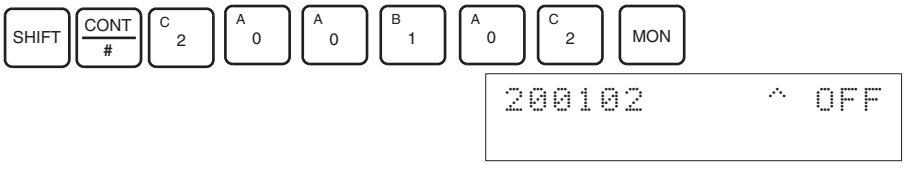

The bit will remain ON until the output voltage becomes an appropriate value, at which time, the output will turn OFF.

SET

```
200102      ^ ON
```

RESET

```
200102      ^ OFF
```

5. Check the 10V/5V/20 mA output, and then turn bit 04 (the Set Bit) of CIO word n+1 ON and then OFF again.

SHIFT CONT # C 2 A 0 A 0 B 1 A 0 E 4 MON

```
200104      ^ OFF
```

SET

```
200104      ^ ON
```

RESET

```
10104       ^ OFF
```

While the Gain Bit is ON, the gain value will be saved to the Unit's EEPROM when the Set Bit turns ON.

6. To finish the gain adjustment, turn OFF bit 01 (the Gain Bit) of CIO word n+1.

SHIFT CONT # C 2 A 0 A 0 B 1 A 0 B 1 MON

```
200101      ^ ON
```

RESET

```
200101      ^ OFF
```

⚠ **Caution** Do not turn OFF the power supply or restart the Unit while the Set Bit is ON (data is being written to the EEPROM). Otherwise, illegal data may be written in the Unit's EEPROM and "EEPROM Errors" may occur when the power supply is turned ON or when the Unit is restarted, causing a malfunction.

⚠ **Caution** When making adjustments, be sure to perform both the offset adjustment and gain adjustment at the same time.

Note The EEPROM can be overwritten 50,000 times.

Clearing Offset and Gain Adjusted Values

Follow the procedure outlined below to return the offset and gain adjusted values to their default settings.

The following example uses output number 1 adjustment for illustration. (The unit number is 0.)

1,2,3...

1. Turn ON bit 05 (the Clear Bit) of CIO word n+1. (Hold the ON status.) Regardless of the set value, 0000 will be monitored in CIO word n+8.

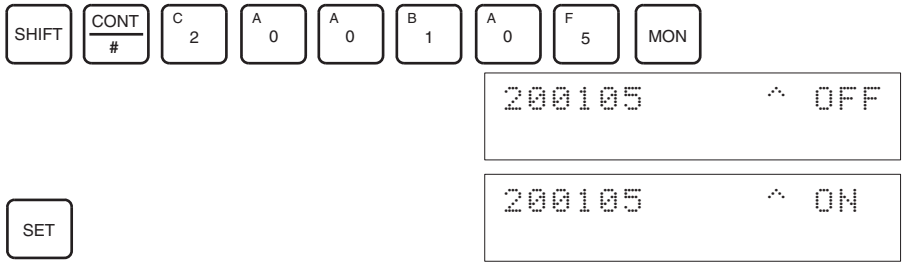

2. Turn bit 04 of CIO word n+1 ON and then OFF again.

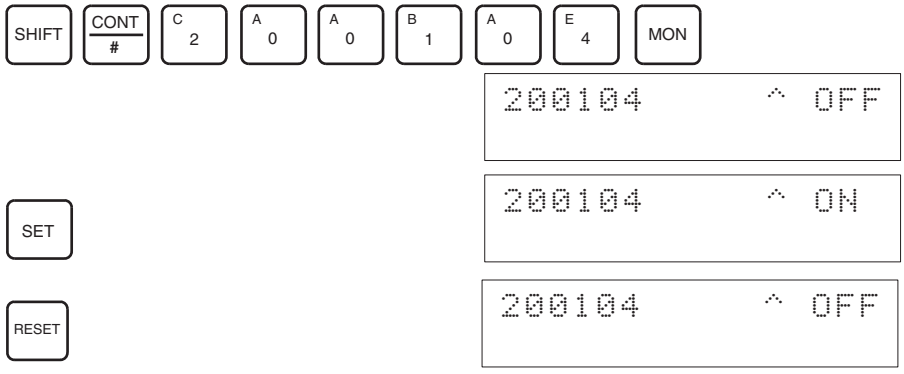

While the Clear Bit is ON, the adjusted value will be cleared and reset to the default offset and gain values when the Set Bit turns ON.

3. To finish the clearing of adjusted values, turn OFF bit 05 (the Clear Bit) of CIO word n+1.

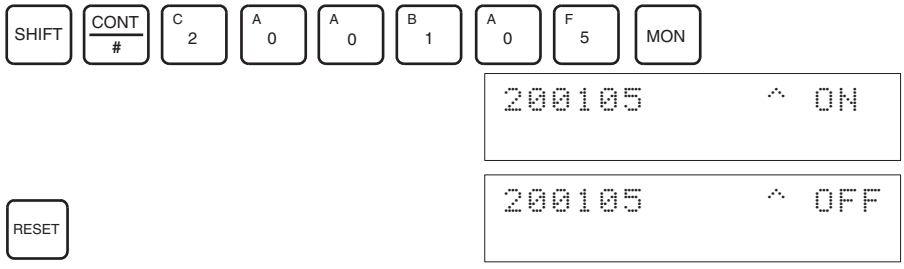

⚠ **Caution** Do not turn OFF the power supply or restart the Unit while the Set Bit is ON (data is being written to the EEPROM). Otherwise, illegal data may be written in the Unit's EEPROM and "EEPROM Errors" may occur when the power supply is turned ON or when the Unit is restarted, causing a malfunction.

Note The EEPROM can be overwritten 50,000 times.

5-8 Handling Errors and Alarms

5-8-1 Indicators and Error Flowchart

Indicators

If an alarm or error occurs in the Analog Output Unit, the ERC or ERH indicators on the front panel of the Unit will light.

Front panel of Unit

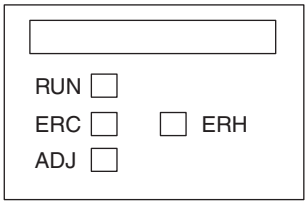

LED	Meaning	Indicator	Operating status
RUN (green)	Operating	Lit	Operating in normal mode.
		Not lit	Unit has stopped exchanging data with the CPU Unit.
ERC (red)	Error detected by Unit	Lit	Alarm has occurred (such as disconnection detection) or initial settings are incorrect.
		Not lit	Operating normally.
ADJ (yellow)	Adjusting	Flashing	Operating in offset/gain adjustment mode.
		Not lit	Other than the above.
ERH (red)	Error in the CPU Unit	Lit	Error has occurred during data exchange with the CPU Unit.
		Not lit	Operating normally.

Troubleshooting Procedure

Use the following procedure for troubleshooting Analog Output Unit errors.

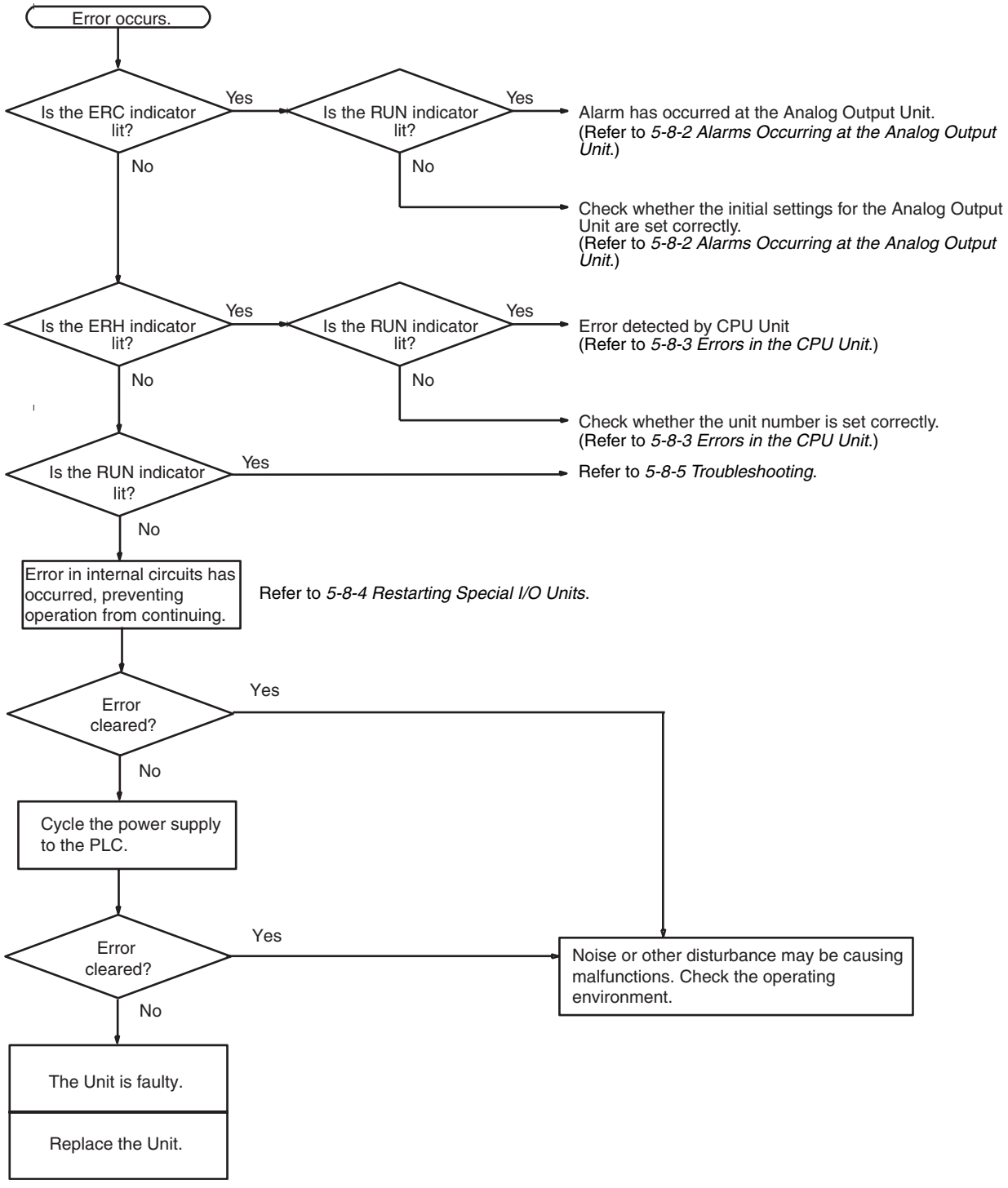

5-8-2 Alarms Occurring at the Analog Output Unit

The ERC indicator will light when the Analog Output Unit detects an alarm. The Alarm Flags in bits 08 to 15 of CIO word n+9 will turn ON.

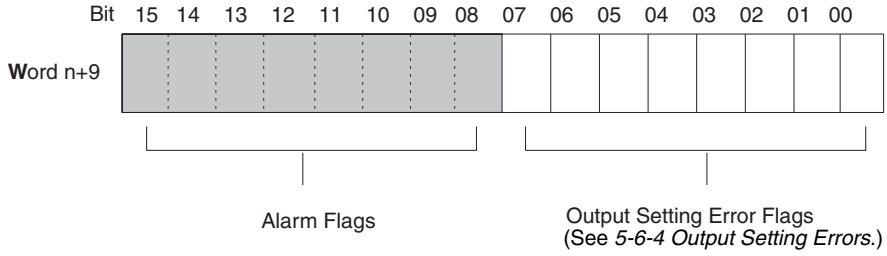

Note With the CS1W-DA041, the Output Setting Error Flags are bits 00 to 03.

For the CIO word addresses, n = CIO 2000 + (unit number × 10).

ERC and RUN Indicators: Lit

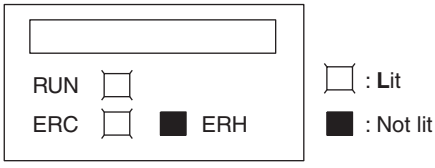

The ERC and RUN indicators will be lit if an error occurs while the Unit is operating normally. The following alarm flags will turn ON in CIO word n+9. These alarm flags will turn OFF automatically when the error is cleared.

Word n + 9	Alarm flag	Error contents	Output status	Countermeasure
Bits 00 to 07 (See note 1.)	Output Set Value Error	The output setting range has been exceeded.	Output value set by output hold function.	Correct the set value.
Bit 14	(Adjustment mode) EEPROM Writing Error	An EEPROM writing error has occurred while in adjustment mode.	Holds the output status immediately prior to the error.	Turn the Set Bit OFF, ON, and OFF again. If the error persists even after the reset, replace the Analog Output Unit.

Note
1. n = CIO 2000 + (unit number × 10).
2. The Output Setting Error Flags for the CS1W-DA041 are bits 00 to 03. Bits 04 to 07 are not used (always OFF).

ERC Indicator and RUN Indicator: Lit, ADJ Indicator: Flashing

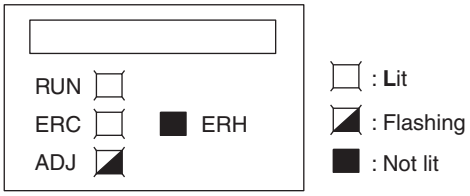

This alarm will occur in the case of incorrect operation while in the adjustment mode. In adjustment mode, the Adjustment Mode ON Flag will turn ON in bit 15 of CIO word n+9.

Word n + 9	Alarm flag	Error contents	Output status	Countermeasure
Bit 13	(Adjustment mode) Output Number Setting Error	In adjustment mode, adjustment cannot be performed because the specified output number is not set for use or because the wrong output number is specified.	The output voltage or current becomes 0 V or 0 mA.	Check whether the word n output number to be adjusted is set from 11 to 14. Check whether the output number to be adjusted is set for use by means of the DM setting.
Bit 15 only ON	(Adjustment Mode) PLC Error	The PLC is in either MONITOR or RUN mode while the Analog Output Unit is operating in adjustment mode.	The output voltage or current becomes 0 V or 0 mA.	Detach the Unit. Switch the rear panel DIP switch pin to OFF. Restart the Unit in normal mode.

Note When a PLC error occurs in the adjustment mode, Unit operations will stop operating. (The input and output values immediately prior to the error will be held.)

ERC Indicator: Lit, RUN Indicator: Not Lit

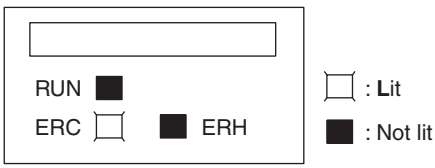

The ERC indicator will be lit when the initial settings for the Analog Output Unit are not set correctly. The alarm flags for the following errors will turn ON in CIO word n+9. These alarm flags will turn OFF when the error is cleared and the power to the PLC is cycled, or the Special I/O Unit Restart Bit is turned ON and then OFF again.

Word n + 9	Alarm flag	Error contents	Countermeasure
Bit 10	Output Hold Setting Error	The setting of the output status for when conversion is stopped is wrong.	Specify a number from 0000 to 0002.

Note Bit 15 is normally turned OFF (i.e., set to 0).

5-8-3 Errors in the CPU Unit

The ERH indicator will light if an error occurs in the CPU Unit or I/O bus and I/O refreshing with the Special I/O Units is not performed correctly, preventing the Analog Output Unit from operating.

ERH and RUN Indicators: Lit

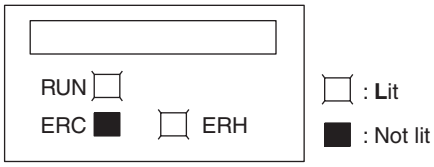

The ERH and RUN indicators will lIght if an error occurs in the I/O bus causing a WDT (watchdog timer) error in the CPU Unit, resulting in incorrect I/O refresh with the Analog Output Unit.

Turn ON the power supply again or restart the system.
For further details, refer to *CS-series CS1G/H-CPU□□-E Programmable Controllers Operation Manual* (W339).

Error	Error contents	Output condition
I/O bus error	Error has occurred during data exchange with the CPU Unit.	Output value set by output hold function.
CPU Unit monitoring error (See note.)	No response from CPU Unit for a specified period of time.	Maintains the status from before the error.
CPU Unit WDT error	Error has been generated in CPU Unit.	Output value set by output hold function.

Note No error will be detected by the CPU Unit or displayed on the Programming Console, because the CPU Unit is continuing operation.

ERH Indicator: Lit, RUN Indicator: Not Lit

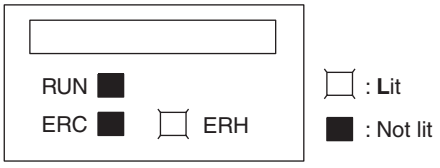

The unit number for the Analog Output Unit has not been set correctly.

Error	Error contents	Output condition
Duplicate Unit Number	The same unit number has been assigned to more than one Unit or the unit number was set to a value other than 00 to 95.	The output value will be 0 V.
Special I/O Unit Setting Error	The Special I/O Units registered in the I/O table are different from the ones actually mounted.	

5-8-4 Restarting Special I/O Units

To restart the Analog Output Unit after changing the contents of the DM Area or correcting an error, cycle the power to the PLC or turn ON the Special I/O Unit Restart Bit.

Special I/O Unit Restart Bits

Bits	Functions	
A50200	Unit #0 Restart Bit	Turning the Restart Bit for any Unit ON and then OFF again restarts that Unit.
A50201	Unit #1 Restart Bit	
to	to	
A50215	Unit #15 Restart Bit	
A50300	Unit #16 Restart Bit	
to	to	
A50715	Unit #95 Restart Bit	

The output becomes 0 V or 0 mA during restart.

Replace the Unit if the error is not cleared even though the power supply is cycled or the Restart Bit is turned ON.

5-8-5 Troubleshooting

The following tables list the probable causes of troubles that may occur, and the countermeasures for dealing with them.

Analog Output Does Not Change

Probable Cause	Countermeasure	Page
The output is not set for being used.	Set the output for being used.	197
The output hold function is in operation.	Turn ON the Output Conversion Enable Bit.	200
The conversion value is set outside of the permissible range.	Set the data within the range.	176

Value Does Not Change as Intended

Probable Cause	Countermeasure	Page
The output signal range setting is wrong.	Correct the output signal range setting.	198
The specifications of the output device do not match those of the Analog Output Unit (e.g., input signal range, input impedance).	Change the output device.	174
The offset or gain is not adjusted.	Adjust the offset or gain.	201

Outputs Are Inconsistent

Probable Cause	Countermeasure	Page
The output signals are being affected by external noise.	Try changing the shielded cable connection (e.g., the grounding at the output device).	190

SECTION 6
CJ-series Analog Output Unit (CJ1W-DA021/041/08V/08C)

This section explains how to use the CJ1W-DA021/041/08V/08C Analog Output Units.

6-1 Specifications 218
6-1-1 Specifications 218
6-1-2 Output Function Block Diagram 220
6-1-3 Output Specifications 220
6-2 Operating Procedure 222
6-2-1 Procedure Examples 224
6-3 Components and Switch Settings 230
6-3-1 Indicators 231
6-3-2 Unit Number Switches 231
6-3-3 Operation Mode Switch (DA021/041) 232
6-4 Wiring 232
6-4-1 Terminal Arrangement 232
6-4-2 Internal Circuitry 234
6-4-3 Output Wiring Example 235
6-4-4 Output Wiring Considerations 235
6-5 Exchanging Data with the CPU Unit 236
6-5-1 Outline of Data Exchange. 236
6-5-2 Unit Number Setting. 237
6-5-3 Special I/O Unit Restart Bits 237
6-5-4 Fixed Data Allocations 238
6-5-5 I/O Refresh Data Allocations 241
6-6 Analog Output Functions and Operating Procedures 245
6-6-1 Output Settings and Conversions 245
6-6-2 Conversion Time/Resolution Setting (CJ1W-DA08V/08C Only) . . 247
6-6-3 Starting and Stopping Conversion 247
6-6-4 Output Hold Function. 248
6-6-5 Output Scaling (CJ1W-DA08V/08C Only) 249
6-6-6 Output Setting Errors 251
6-7 Adjusting Offset and Gain 252
6-7-1 Adjustment Mode Operational Flow 252
6-7-2 Output Offset and Gain Adjustment Procedures 255
6-8 Handling Errors and Alarms 263
6-8-1 Indicators and Error Flowchart. 263
6-8-2 Alarms Occurring at the Analog Output Unit. 265
6-8-3 Errors in the CPU Unit 267
6-8-4 Restarting Special I/O Units. 268
6-8-5 Troubleshooting 268

6-1 Specifications

6-1-1 Specifications

Item	CJ1W-DA021	CJ1W-DA041	CJ1W-DA08V	CJ1W-DA08C
Unit type	CJ-series Special I/O Unit			
Isolation (See note 1.)	Between outputs and PLC signals: Photocoupler (No isolation between output signals.)			
External terminals	18-point detachable terminal block (M3 screws)			
Affect on CPU Unit cycle time	0.2 ms			
Current consumption	5 VDC, 120 mA max.		5 VDC, 140 mA max.	
External power supply	24 VDC +10%, −15% (inrush current: 20 A max., pulse width: 1 ms min.)			
	140 mA max.	200 mA max.	140 mA max.	170 mA max.
Dimensions (mm) (See note 2.)	31 × 90 × 65 (W × H × D)			
Weight	150 g max.			
General specifications	Conforms to general specifications for SYSMAC CJ-series Series.			
Mounting position	CJ-series CPU Rack or CJ-series Expansion Rack			
Maximum number of Units	Per CPU Rack or Expansion Rack (See note 3.)	**Power Supply Unit**	**No. of mountable Units**	
		CJ1W-PA205R CJ1W-PA205C CJ1W-PD025	CPU Rack: 10 Units/Rack Expansion Rack: 10 Units/Rack	
		CJ1W-PA202	CPU Rack: 10 Units/Rack Expansion Rack: 10 Units/Rack	
		CJ1W-PD022	CPU Rack: 10 Units/Rack Expansion Rack: 10 Units/Rack	
Data exchange with CPU Unit	Special I/O Unit Area CIO 200000 to CIO295915 (Words CIO 2000 to CIO 2959)			
	Internal Special I/O Unit DM Area (D20000 to D29599)			

Output Specifications and Functions

Item		CJ1W-DA021	CJ1W-DA041	CJ1W-DA08V	CJ1W-DA08C
Number of analog outputs		2	4	8	8
Output signal range (See note 4.)		1 to 5 V/4 to 20 mA 0 to 5 V 0 to 10 V −10 to +10 V		1 to 5 V 0 to 5 V 0 to 10 V −10 to +10 V	4 to 20 mA
Output impedance		0.5 Ω max. (for voltage output)			
Max. output current (for 1 point)		12 mA (for voltage output)		2.4 mA (for voltage output)	---
Maximum permissible load resistance		600 Ω (current output)		---	350 Ω
Resolution		4,000 (full scale)		4,000/8,000 (See note 9.)	
Set data		16-bit binary data			
Accuracy (See note 6.)	23±2°C	Voltage output: ±0.3% of full scale Current output: ±0.5% of full scale		±0.3% of full scale	±0.3% of full scale
	0°C to 55°C	Voltage output: ±0.5% of full scale Current output: ±0.8% of full scale		±0.5% of full scale	±0.6% of full scale
D/A conversion period (See note 7.)		1.0 ms/point max.		1.0 ms or 250 μs max. per point	

Item	CJ1W-DA021	CJ1W-DA041	CJ1W-DA08V	CJ1W-DA08C
Output hold function	Outputs the specified output status (CLR, HOLD, or MAX) under any of the following circumstances. When the Conversion Enable Bit is OFF. (See note 8.) In adjustment mode, when a value other than the output number is output during adjustment. When there is an output setting error or a fatal error occurs at the PLC. (See note 10.) When the Load is OFF.			
Scaling function	Setting values in any specified unit within a range of ±32,000 as the upper and lower limits allows D/A conversion to be executed and analog signals to be output with these values as full scale. (With the CJ1W-DA08V/DA08C, this function is enabled only for a conversion time of 1.0 s and a resolution of 4,000.)			

Note

1. Do not apply a voltage higher than 600 V to the terminal block when performing withstand voltage test on this Unit.
2. Refer to *Dimensions* on page 441 for details on the Unit's dimensions.
3. This is the maximum number of Units that can be mounted to a CJ2H-CPU6□ CPU Unit (no EtherNet/IP). The maximum number of Analog Input Units that can be mounted to one Rack varies depending on the current consumption of the other Units mounted to the Rack.

   Select a 24-VDC power supply based on the surge current. The following OMRON power supplies are recommended.

   S82K-05024: 100 VAC, 50 W
   S82K-10024: 100 VAC, 100 W
4. Data exchange methods with the CPU Unit are as follows:

Special I/O Unit Area in CIO Area CIO 2000 to CIO 2959 (CIO 200000 to CIO 295915	10 words per Unit Refreshed cyclically	CPU Unit to Analog I/O Unit	Analog output values Conversion enable bits
		Analog I/O Unit to CPU Unit	Alarm flags
Special I/O Unit Area in DM Area D20000 to D29599	100 words per Unit Refreshed at power ON and restarts	CPU Unit to Analog I/O Unit	Output signal conversion settings and signal ranges Output status when holding outputs

5. Output signal ranges can be set for each output.
6. The accuracy is given for full scale. For example, an accuracy of ±0.3% means a maximum error of ±12 (BCD) at a resolution of 4,000. For the CJ1W-DA021/041, the accuracy is at the factory setting for a current output. When using a voltage output, adjust the offset gain as required.
7. D/A conversion time is the time required for converting and outputting the PLC data. It takes at least one cycle for the data stored in the PLC to be read by the Analog Output Unit.
8. When the operation mode for the CPU Unit is changed from RUN mode or MONITOR mode to PROGRAM mode, or when the power is turned ON, the Output Conversion Enable Bit will turn OFF. The output status specified according to the output hold function will be output.
9. The CJ1W-DA08V/08C can be set to a conversion cycle of 250 μs and a resolution of 8,000 using the setting in D(m+18).

6-1-2 Output Function Block Diagram

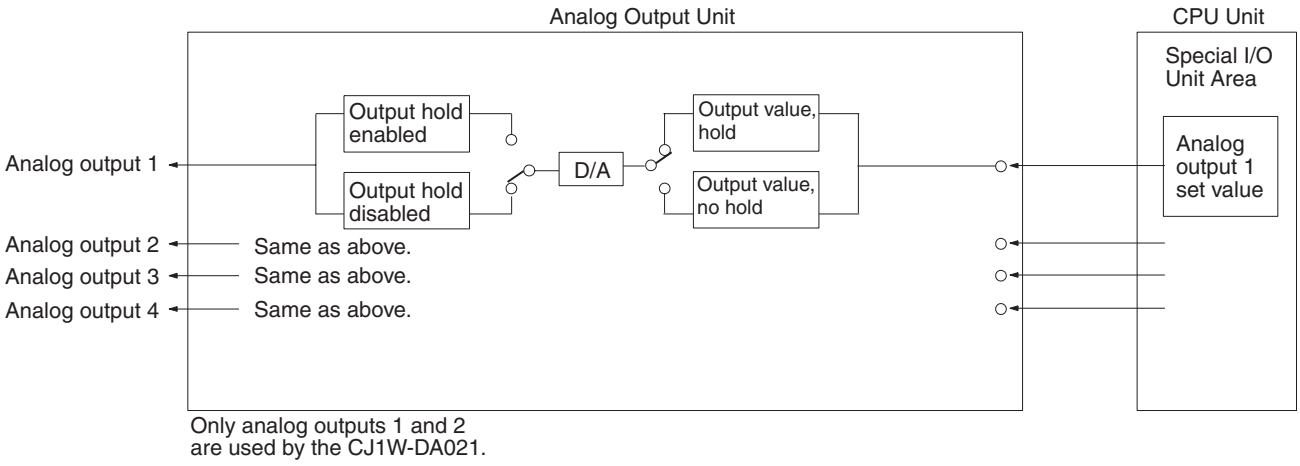

6-1-3 Output Specifications

If the set value is outside the specified range provided below, an output setting error will occur, and the output specified by the output hold function will be output.

Range: 1 to 5 V (4 to 20 mA)

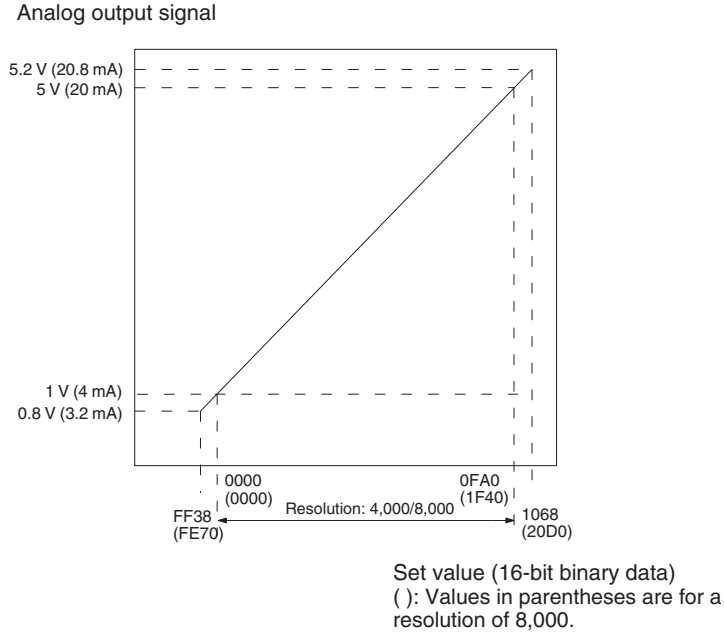

Range: 0 to 10 V

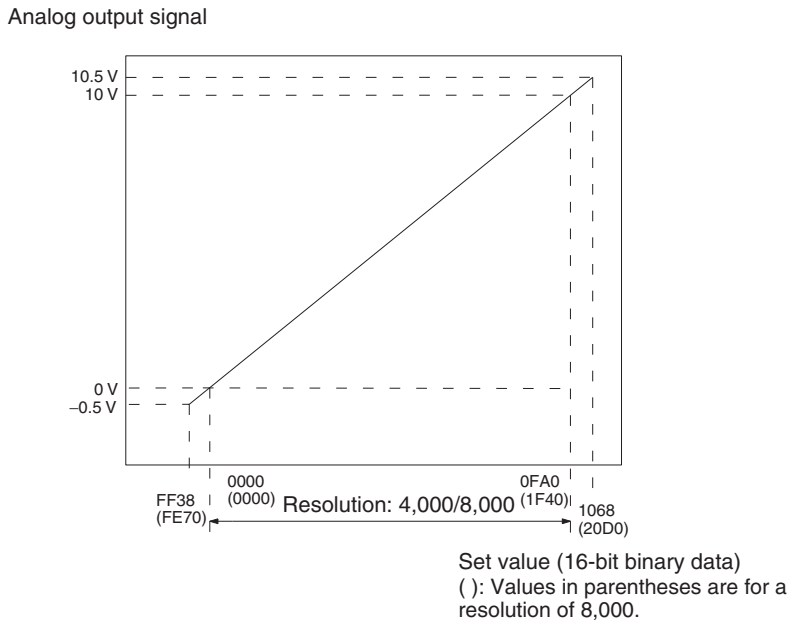

Range: 0 to 5 V

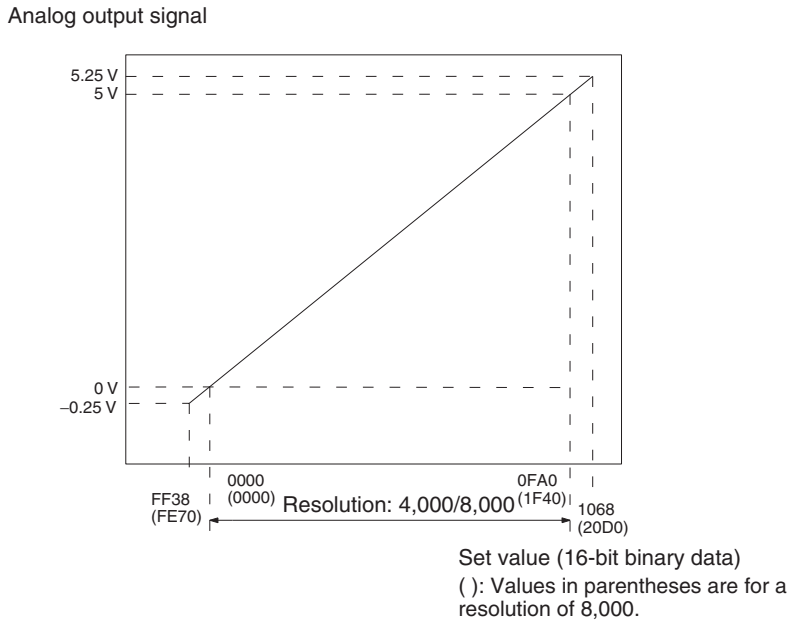

Range: –10 to 10 V

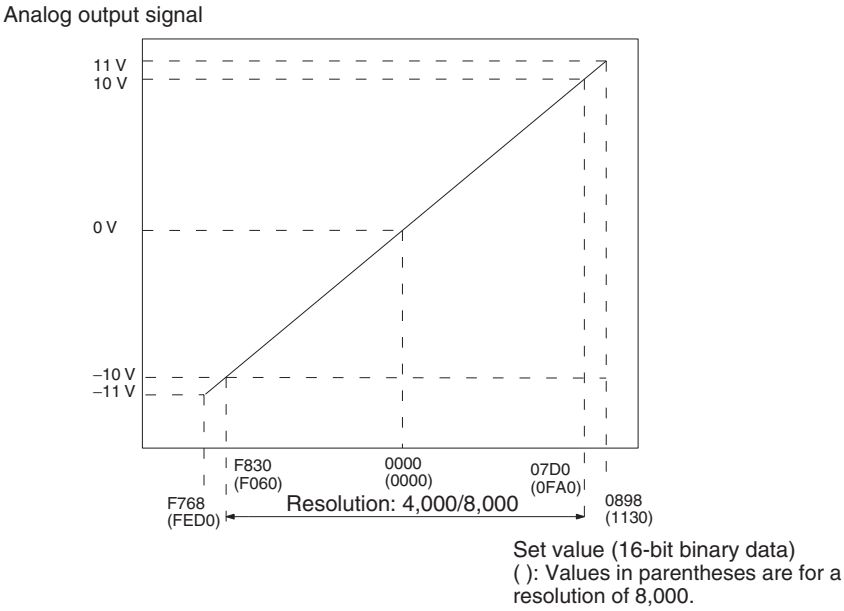

Note The set values for a range of –10 to 10 V will be as follows:

16-bit binary data (when resolution is 4,000)	BCD
F768	–2200
:	:
FFFF	–1
0000	0
0001	1
:	:
0898	2200

6-2 Operating Procedure

Follow the procedures outlined below when using CJ1W-DA021/041 and CJ1W-DA08V/08C Analog Output Units.

Installation and Settings

CJ1W-DA021/041

1,2,3...

1. Set the operation mode switch on the front panel of the Unit to normal mode.
2. Use the unit number switches on the front panel of the Unit to set the unit number.
3. Wire the Unit.
4. Turn ON the power to the PLC.
5. Turn ON the power to the external devices.
6. Create the I/O tables.
7. Make the Special I/O Unit DM Area settings.
   - Set the output numbers to be used.
   - Set the output signal ranges.

- Set the output hold function.

8. Turn the power to the PLC OFF and ON, or turn ON the Special I/O Unit Restart Bit.

When the output for the connected devices needs to be calibrated, follow the procedures in *Offset and Gain Adjustment* below. Otherwise, skip to *Operation* below.

Offset and Gain Adjustment

1,2,3...

1. Set the operation mode switch on the front panel of the Unit to adjustment mode.
2. Turn ON the power to the PLC.
   Be sure to set the PLC to PROGRAM mode.
3. Turn ON the power to the external devices.
4. Adjust the offset and gain.
5. Turn OFF the power to the external devices.
6. Turn OFF the power to the PLC.
7. Change the setting of the operation mode switch on the front panel of the Unit back to normal mode.

Operation

1,2,3...

1. Turn ON the power to the PLC.
2. Turn ON the power to the external devices.
3. Ladder program
   - Write set values by means of MOV(021) and XFER(070).
   - Start and stop conversion output.
   - Obtain error codes.

Note Turn the external power supply ON and OFF while power is supplied to the CPU Unit or simultaneously with the CPU Unit. Do not turn the external power supply ON or OFF when power is not supplied to the CPU Unit.

Installation and Settings

CJ1W-DA08V/08C

1,2,3...

1. Use the unit number switches on the front panel of the Unit to set the unit number.
2. Wire the Unit.
3. Turn ON the power to the PLC.
4. Turn ON the power to the external devices.
5. Create the I/O tables.
6. Make the Special I/O Unit DM Area settings.
   - Set the output numbers to be used.
   - Set the output signal ranges. (Not required for the CJ1W-DA08C.)
   - Set the output hold function.
   - Set the conversion time and resolution.
   - Set the scaling function
7. Turn the power to the PLC OFF and ON, or turn ON the Special I/O Unit Restart Bit.

When the output for the connected devices needs to be calibrated, follow the procedures in *Offset and Gain Adjustment* below. Otherwise, skip to *Operation* below.

Offset and Gain Adjustment

1,2,3...

1. Turn ON the power to the PLC.
   Be sure to set the PLC to PROGRAM mode.
2. Turn ON the power to the external devices.
3. Set the mode to adjustment mode in the Special I/O Unit DM Area.
4. Turn the power to the PLC OFF and ON, or turn ON the Special I/O Unit Restart Bit.
5. Adjust the offset and gain.
6. Set the mode to normal mode in the Special I/O Unit DM Area.
7. Restart the Analog Output Unit using its Special I/O Unit Restart Bit or turn the power supply to the PLC OFF and ON.

Operation

Ladder program

- Write set values by means of MOV(021) and XFER(070).
- Start and stop conversion output.
- Obtain error codes.

Note Turn the external power supply ON and OFF while power is supplied to the CPU Unit or simultaneously with the CPU Unit. Do not turn the external power supply ON or OFF when power is not supplied to the CPU Unit.

6-2-1 Procedure Examples

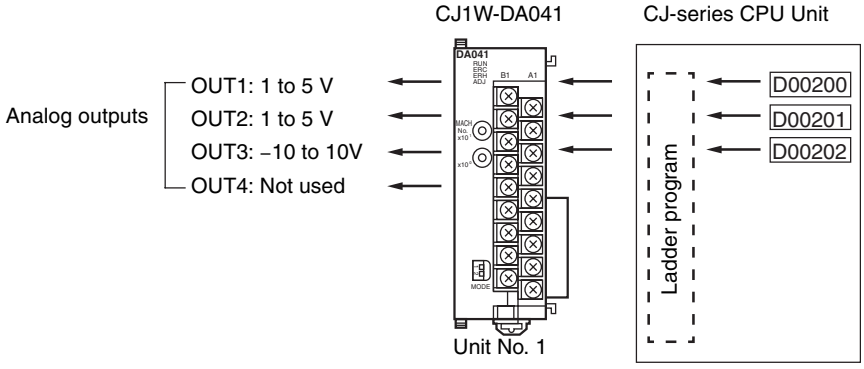

Setting the Analog Output Unit

1,2,3... 1. Set the operation mode switch on the front panel of the Unit. Refer to *6-3-3 Operation Mode Switch (DA021/041)* for further details.
The CJ1W-DA08V/08C does not have this switch. Change the mode by making the setting in D (m+18).

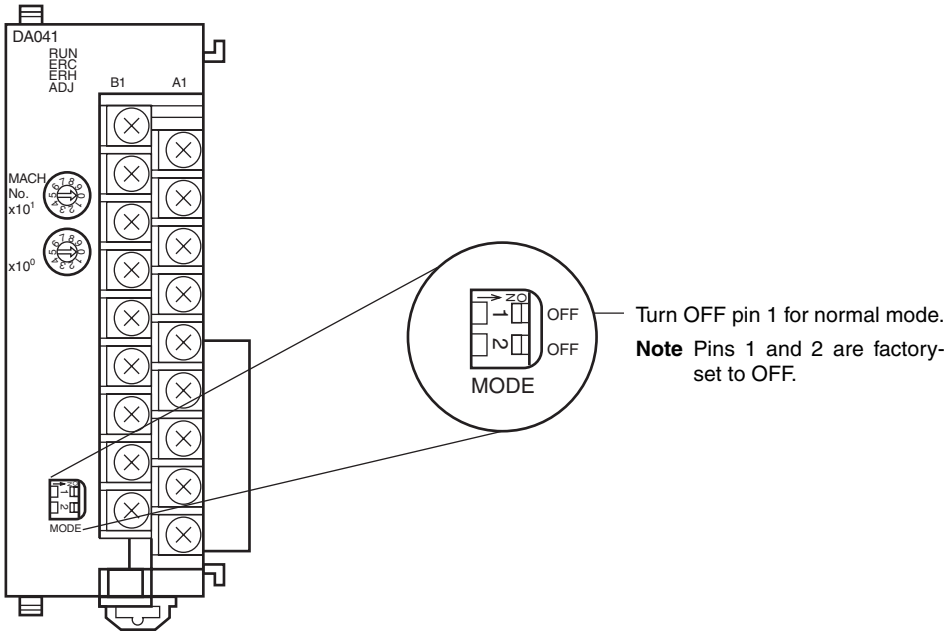

2. Set the unit number switches. Refer to *6-3-2 Unit Number Switches* for further details.

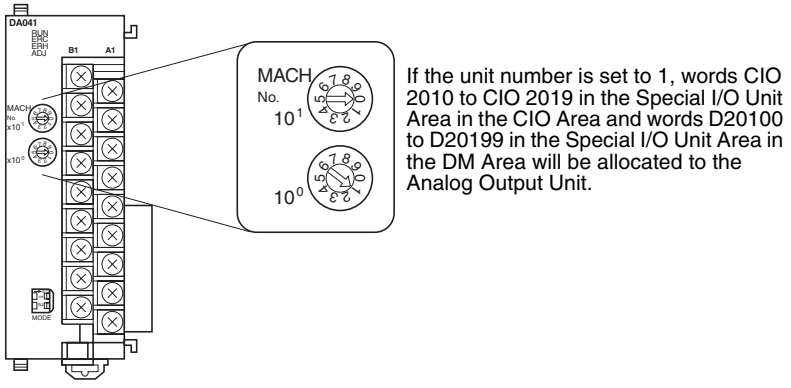

3. Connect and wire the Analog Output Unit. Refer to *1-2-1 Mounting Procedure*, *Note The CJ1W-DA08V/08C Analog Output Unit has a software setting for the operation mode in bits 00 to 07 of DM word m+18. The contents of DM word m+18 are shown below.* or *6-4-3 Output Wiring Example* for further details.

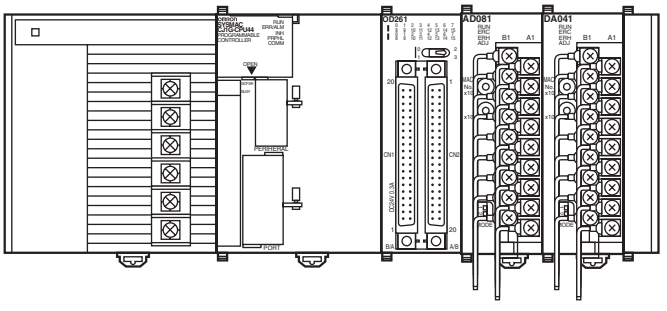

4. Turn ON the power to the PLC.
5. Turn ON the power to the external devices. (Can be turned ON at the same time as the PLC.)

Creating I/O Tables

After turning ON the power to the PLC, be sure to create the I/O tables.

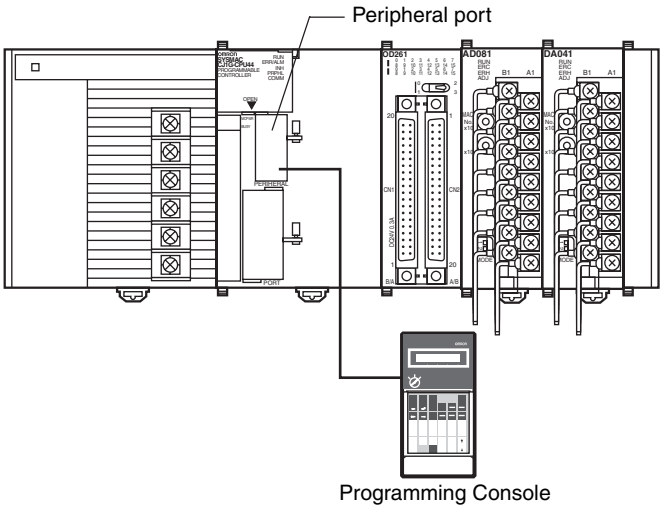

Initial Data Settings

1,2,3... 1. Specify the Special I/O Unit settings in the DM Area. Refer to *DM Allocation Contents* on page 238 for further details.

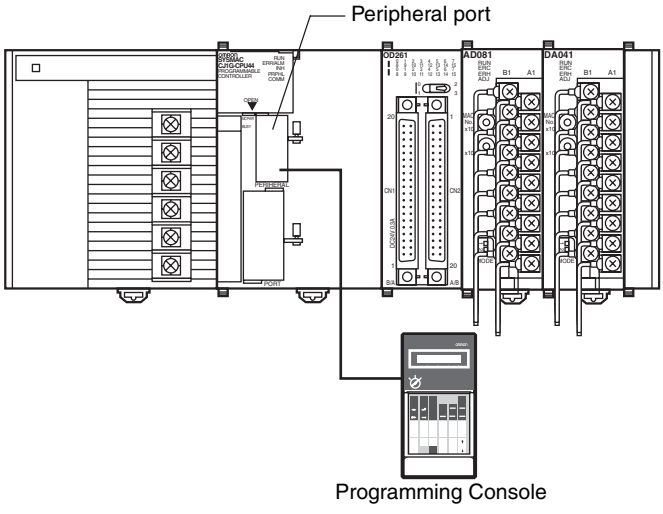

Conditions
Unit number: 1
Analog output 1: 1 to 5 V
Analog output 2: 1 to 5 V
Analog output 3: –10 to 10 V
Analog output 4: Not used

- The following diagram shows the output settings used. Refer to *6-6-1 Output Settings and Conversions* for more details.

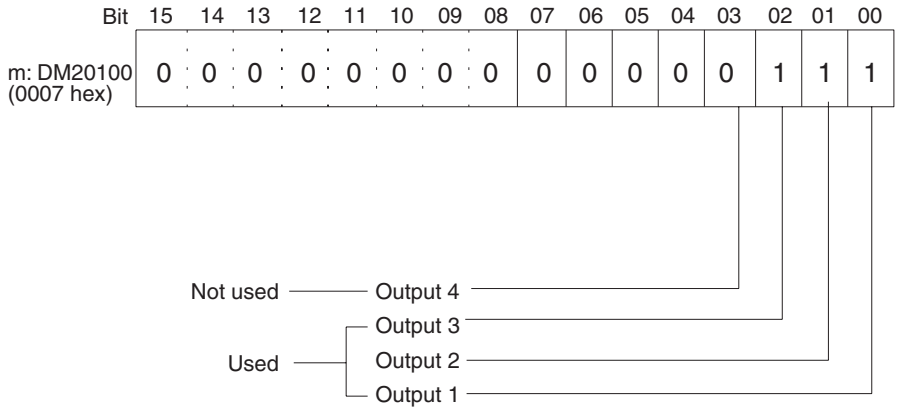

- The following diagram shows the output range settings. Refer to *6-6-1 Output Settings and Conversions* for more details.

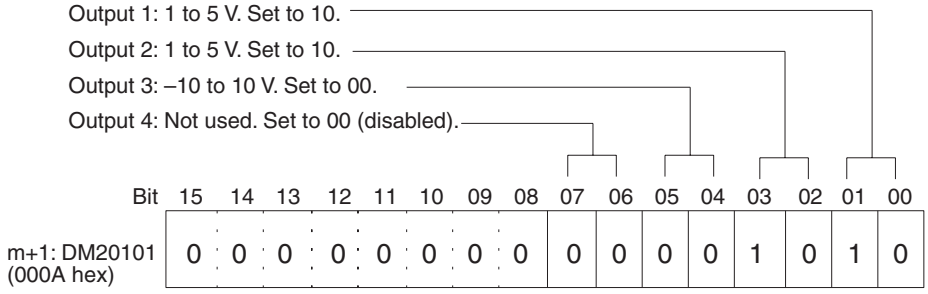

Note The output range setting is not required for the CJ1W-DA08C.

- The following diagram shows the conversion time/resolution setting for the DA08V. (Refer to *6-6-2 Conversion Time/Resolution Setting (CJ1W-DA08V/08C Only)*.)

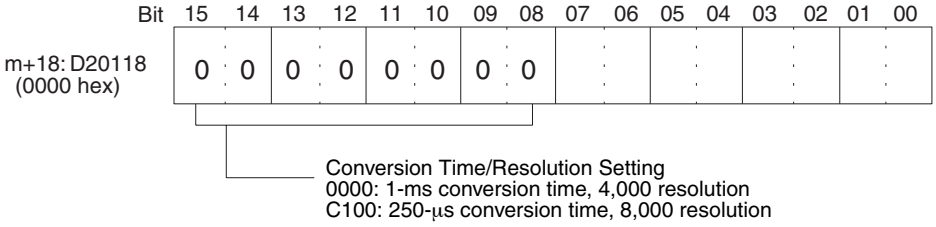

2. Turn OFF the external power supply.
3. Restart the CPU Unit.
4. Turn ON the external power supply.

Creating Ladder Programs

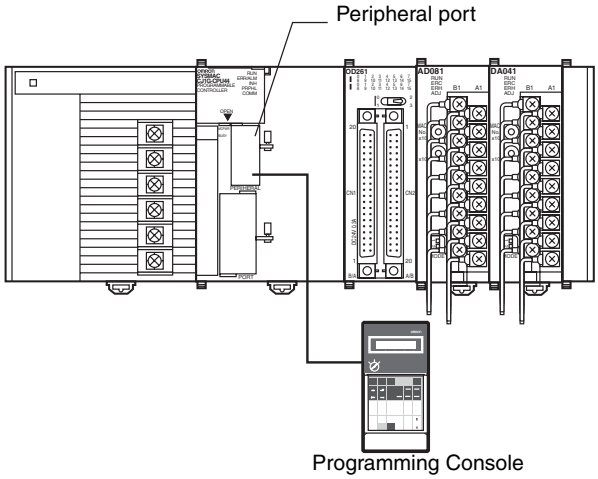

The setting address D00200 is stored in words (n + 1) to (n + 3) of the Special I/O Unit Area (CIO 2011 to CIO 2013) as a signed binary value between 0000 to 0FA0 hex.

The following table shows the addresses used for analog output.

Output number	Output signal range	Address of output set value (n = CIO 2010) See note 1.	Conversion source address
1	1 to 5 V	(n+1) = CIO 2011	D00200
2	0 to 10 V	(n+2) = CIO 2012	D00201
3	–10 to 10 V	(n+3) = CIO 2013	D00202
4	Not used.	---	---

Note 1. The addresses are determined by the unit number of the Special I/O Unit. Refer to *6-3-2 Unit Number Switches* for further details.

2. Set as required.

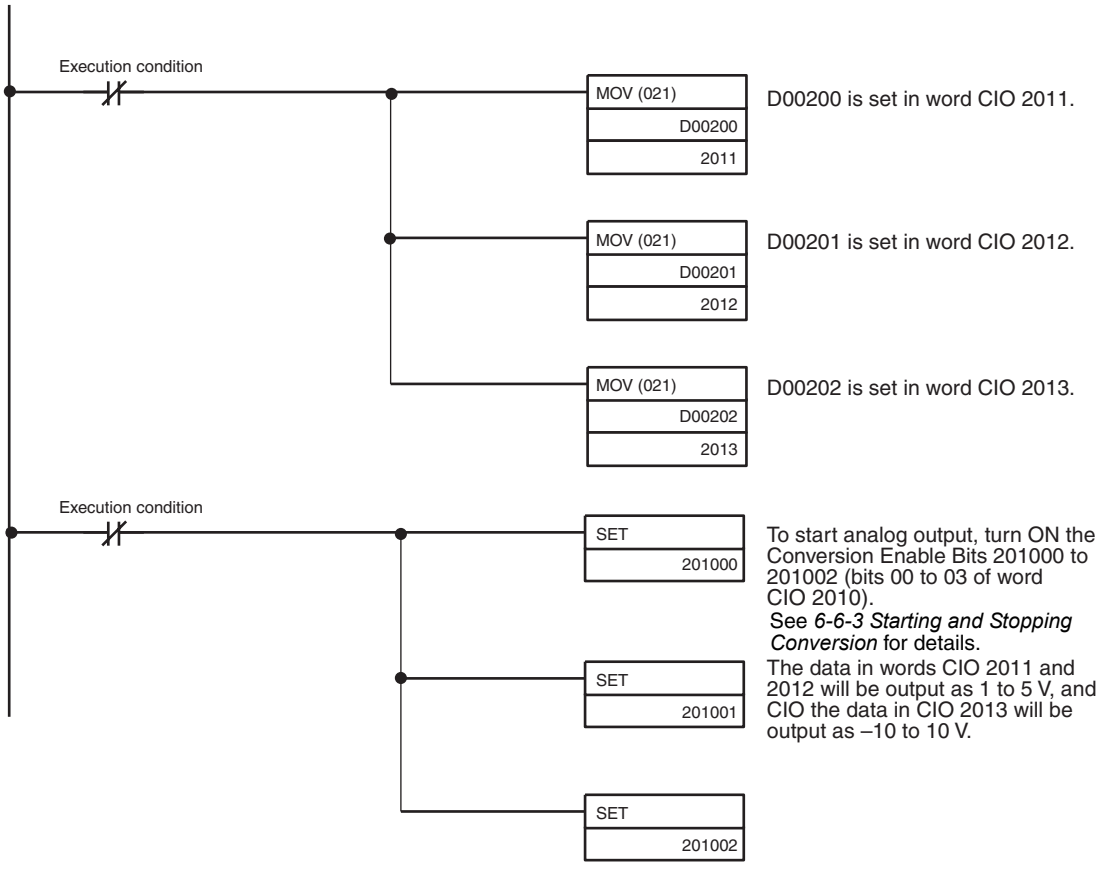

6-3 Components and Switch Settings

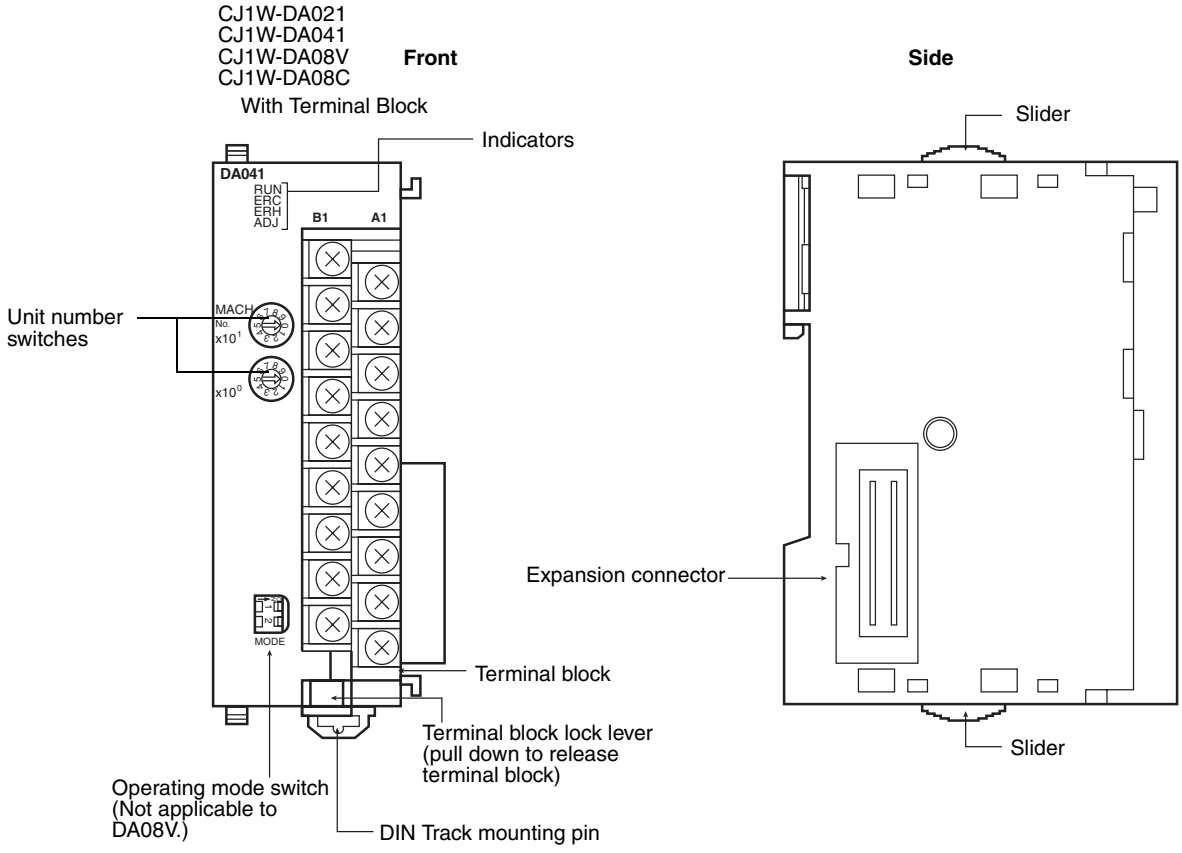

The terminal block is attached using a connector. It can be removed by pressing down on the lever at the bottom of the terminal block. The lever must normally be in the raised position. Confirm this before operation.

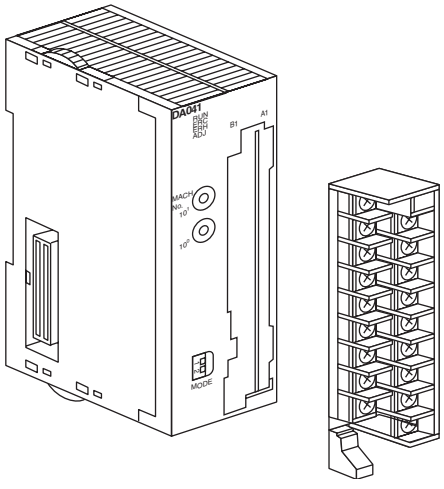

6-3-1 Indicators

The indicators show the operating status of the Unit. The following table shows the meanings of the indicators.

Indicator	Meaning	Indicator status	Operating status
RUN (green)	Operating	Lit	Operating in normal mode.
		Not lit	Unit has stopped exchanging data with the CPU Unit.
ERC (red)	Error detected by Unit	Lit	Alarm has occurred (such as disconnection detection) or initial settings are incorrect.
		Not lit	Operating normally.
ERH (red)	Error in the CPU Unit	Lit	Error has occurred during data exchange with the CPU Unit.
		Not lit	Operating normally.
ADJ (yellow)	Adjusting	Flashing	Operating in offset/gain adjustment mode.
		Not lit	Other than the above.

6-3-2 Unit Number Switches

The CPU Unit and Analog Output Unit exchange data via the Special I/O Unit Areas in the CIO Area and DM Area. The words that are allocated to each Analog Output Unit in the Special I/O Unit Areas in the CIO Area and DM Area are determined by the setting of the unit number switches on the front panel of the Unit.

Always turn OFF the power before setting the unit number. Use a flat-blade screwdriver, being careful not to damage the slot in the screw. Be sure not to leave the switch midway between settings.

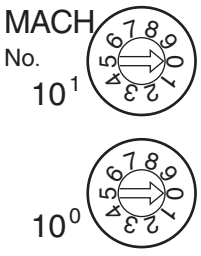

Switch setting	Unit number	Words allocated in Special I/O Unit Area in CIO Area	Words allocated in Special I/O Unit Area in DM Area
0	Unit #0	CIO 2000 to CIO 2009	D20000 to D20099
1	Unit #1	CIO 2010 to CIO 2019	D20100 to D20199
2	Unit #2	CIO 2020 to CIO 2029	D20200 to D20299
3	Unit #3	CIO 2030 to CIO 2039	D20300 to D20399
4	Unit #4	CIO 2040 to CIO 2049	D20400 to D20499
5	Unit #5	CIO 2050 to CIO 2059	D20500 to D20599
6	Unit #6	CIO 2060 to CIO 2069	D20600 to D20699
7	Unit #7	CIO 2070 to CIO 2079	D20700 to D20799
8	Unit #8	CIO 2080 to CIO 2089	D20800 to D20899
9	Unit #9	CIO 2090 to CIO 2099	D20900 to D20999
10	Unit #10	CIO 2100 to CIO 2109	D21000 to D21099
to	to	to	to
n	Unit #n	CIO 2000 + (n × 10) to CIO 2000 + (n × 10) + 9	D20000 + (n × 100) to D20000 + (n × 100) + 99
to	to	to	to
95	Unit #95	CIO 2950 to CIO 2959	D29500 to D29599

Note If two or more Special I/O Units are assigned the same unit number, a “UNIT No. DPL ERR” error (in the Programming Console) will be generated (A40113 will turn ON) and the PLC will not operate.

6-3-3 Operation Mode Switch (DA021/041)

The operation mode switch on the front panel of the Unit is used to set the operation mode to either normal mode or adjustment mode (for adjusting offset and gain).
(The CJ1W-DA08V/08C does not have this switch. Change the mode by making the setting in bits 00 to 07 of DM word m+18. Set 00 for adjustment mode or 01 for normal mode.)

MODE

Pin number		Mode
1	2	
OFF	OFF	Normal mode
ON	OFF	Adjustment mode

⚠ **Caution** Do not set the pins to any combination other than those shown in the above table. Be sure to set pin 2 to OFF.

⚠ **Caution** Be sure to turn OFF the power to the PLC before installing or removing the Unit.

Note The CJ1W-DA08V/08C Analog Output Unit has a software setting for the operation mode in bits 00 to 07 of DM word m+18. The contents of DM word m+18 are shown below.

Bit	15	14	13	12	11	10	09	08	07	06	05	04	03	02	01	00
D (m+18)	Conversion time/resolution setting 00: Conversion time of 1 ms and resolution of 4,000 C1: Conversion time of 250 μs and resolution of 8,000								Operation mode setting 00: Normal mode C1: Adjustment mode							

m = D20000 + (unit number × 100)

6-4 Wiring

6-4-1 Terminal Arrangement

The signal names corresponding to the connecting terminals are as shown in the following diagram.

CJ1W-DA021

Voltage output 2 (+)	B1	A1	Voltage output 1 (+)
Output 2 (–)	B2	A2	Output 1 (–)
Current output 2 (+)	B3	A3	Current output 1 (+)
N.C.	B4	A4	N.C.
N.C.	B5	A5	N.C.
N.C.	B6	A6	N.C.
N.C.	B7	A7	N.C.
N.C.	B8	A8	N.C.
0 V	B9	A9	24 V

CJ1W-DA041

Voltage output 2 (+)	B1	A1	Voltage output 1 (+)
Output 2 (–)	B2	A2	Output 1 (–)
Current output 2 (+)	B3	A3	Current output 1 (+)
Voltage output 4 (+)	B4	A4	Voltage output 3 (+)
Output 4 (–)	B5	A5	Output 3 (–)
Current output 4 (+)	B6	A6	Current output 3 (+)
N.C.	B7	A7	N.C.
N.C.	B8	A8	N.C.
0 V	B9	A9	24 V

CJ1W-DA08V (Voltage Output) and CJ1W-DA08C (Current Output)

Output 2 (+)	B1	A1	Output 1 (+)
Output 2 (–)	B2	A2	Output 1 (–)
Output 4 (+)	B3	A3	Output 3 (+)
Output 4 (–)	B4	A4	Output 3 (–)
Output 6 (+)	B5	A5	Output 5 (+)
Output 6 (–)	B6	A6	Output 5 (–)
Output 8 (+)	B7	A7	Output 7 (+)
Output 8 (–)	B8	A8	Output 7 (–)
0 V	B9	A9	24 V

1. The number of analog outputs that can be used is set in the DM Area.
2. The output signal ranges for individual outputs are set in the DM Area. The output signal range can be set separately for each output.
3. The N.C. terminals are not connected to internal circuitry.
4. We recommend the following external power supplies.

Maker	Model number	Specifications
OMRON	S82K-05024	100 VAC, 50 W
	S82K-10024	100 VAC, 100 W

⚠ **Caution** Use a separate power supply from the one used for Basic I/O Units. Faulty Unit operation may be caused by noise if power is supplied from the same source.

6-4-2 Internal Circuitry

The following diagrams show the internal circuitry of the analog output section.

Voltage Output Circuitry

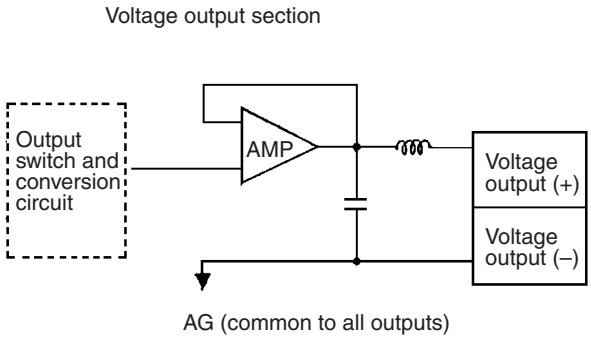

Current Output Circuitry

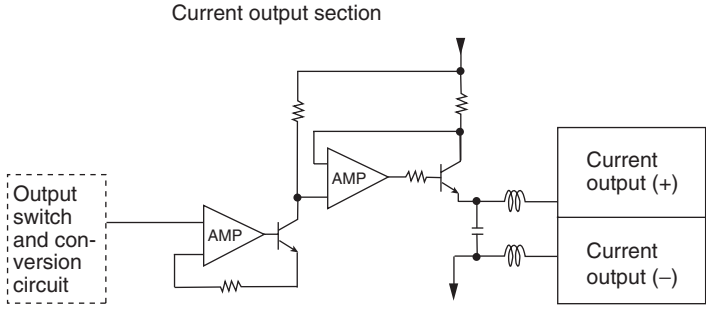

Internal Configuration

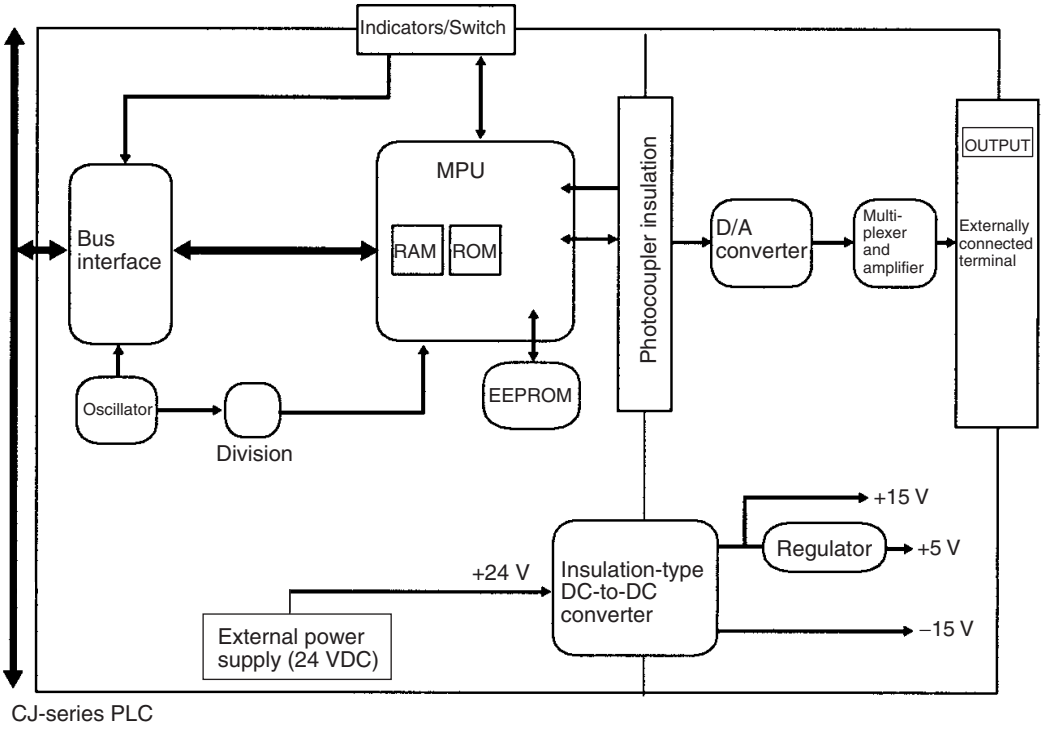

6-4-3 Output Wiring Example

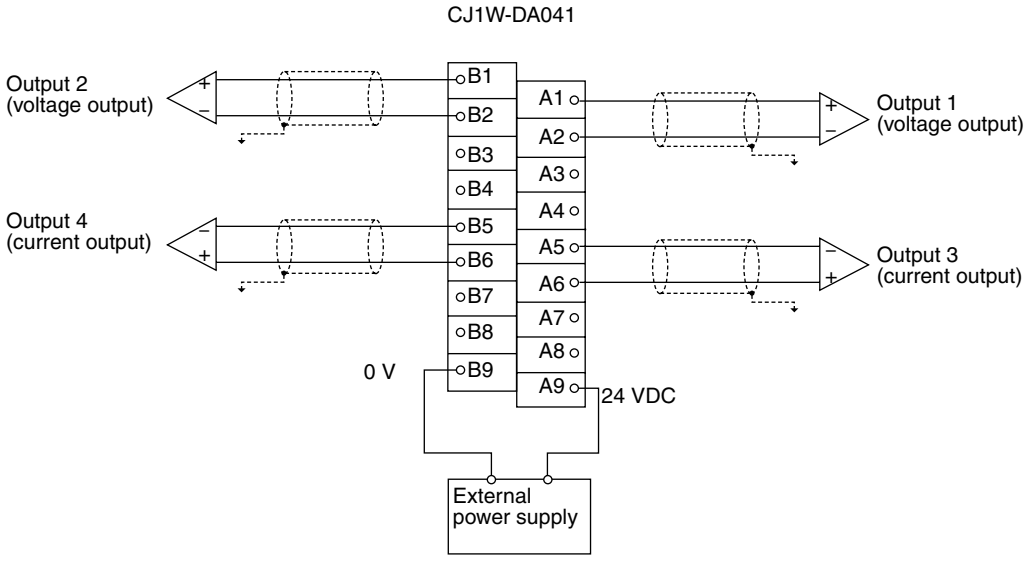

Note Crimp terminals must be used for terminal connections, and the screws must be tightened securely. M3 terminal screws are used. The applicable tightening torque is 0.5 N·m.

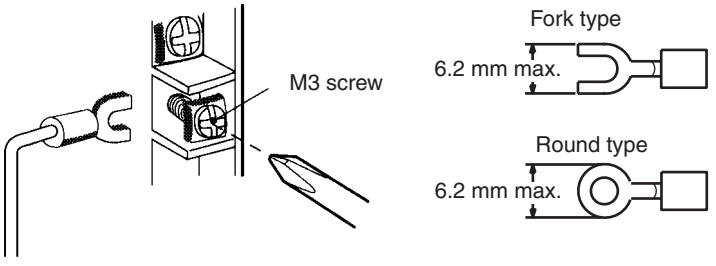

To minimize output wiring noise, ground the output signal line to the input device.

6-4-4 Output Wiring Considerations

When wiring outputs, apply the following points to avoid noise interference and optimize Analog Output Unit performance.

- Use two-core shielded twisted-pair cables for output connections.
- Route output cables separately from the AC cable, and do not run the Unit's cables near a main circuit cable or a high voltage cable. Do not insert output cables into the same duct.
- If there is noise interference from power lines (if, for example, the power supply is shared with electrical welding devices or electrical discharge machines, or if there is a high-frequency generation source nearby) install a noise filter at the power supply input area.
- Use a separate power supply for the external power supply from the one used for Basic I/O Units. If the same power supply is used, noise may cause Units to malfunction.

6-5 Exchanging Data with the CPU Unit

6-5-1 Outline of Data Exchange

Data is exchanged between the CPU Unit and the Analog Output Unit via the Special I/O Unit Area (for data used to operate the Unit) and the Special I/O Unit DM Area (for data used for initial settings).

I/O Refresh Data

Analog output setting values and other data used to operate the Unit are allocated in the Special I/O Unit Area of the CPU Unit according to the unit number, and are exchanged during I/O refreshing.

Fixed Data

The Unit's fixed data, such as the analog output signal ranges and the output status when conversion is stopped, is allocated in the Special I/O Unit DM Area of the CPU Unit according to the unit number, and is exchanged when the power is turned ON or the Unit is restarted.

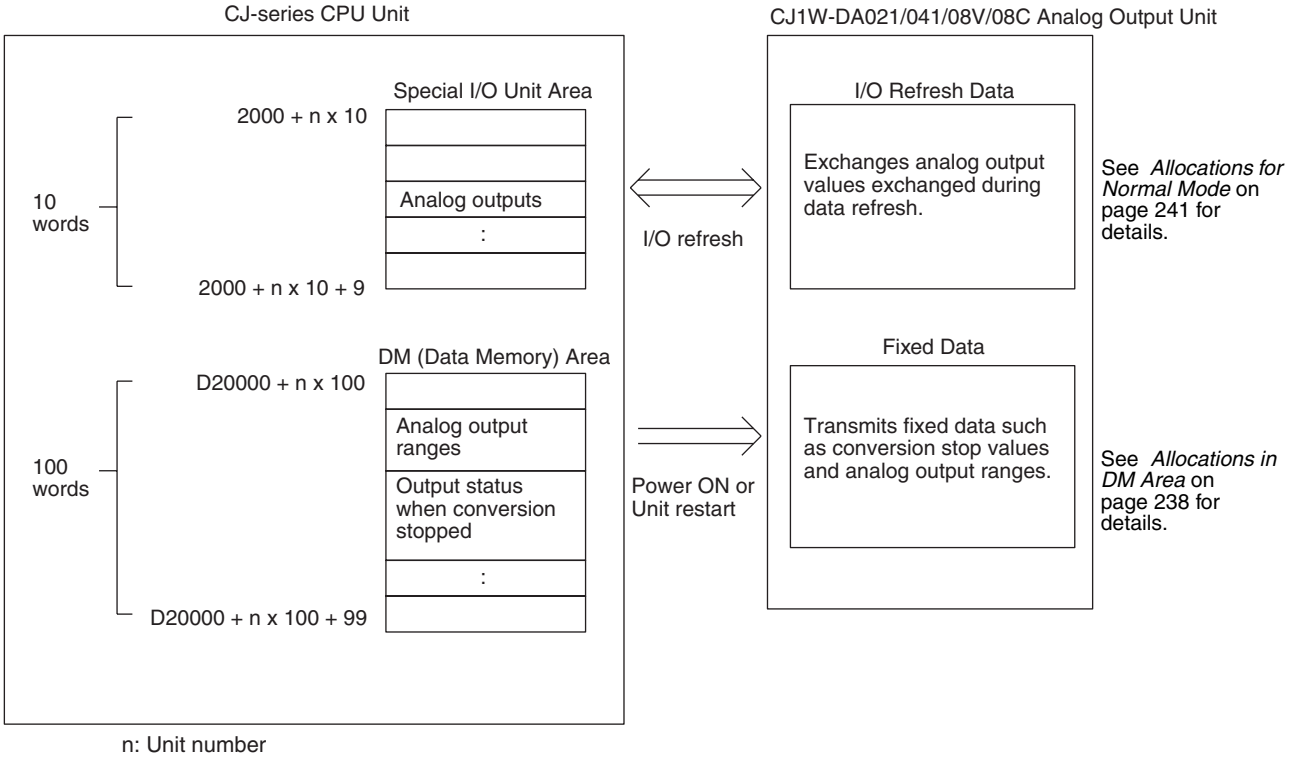

6-5-2 Unit Number Setting

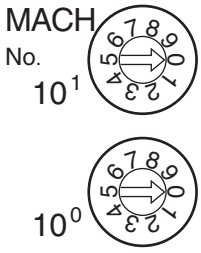

The words in the Special I/O Unit Areas in the CIO Area and DM Area that are allocated to each Analog Output Unit are determined by the setting of the unit number switches on the front panel of the Unit.

Switch setting	Unit number	Words allocated in Special I/O Unit Area in CIO Area	Words allocated in Special I/O Unit Area in DM Area
0	Unit #0	CIO 2000 to CIO 2009	D20000 to D20099
1	Unit #1	CIO 2010 to CIO 2019	D20100 to D20199
2	Unit #2	CIO 2020 to CIO 2029	D20200 to D20299
3	Unit #3	CIO 2030 to CIO 2039	D20300 to D20399
4	Unit #4	CIO 2040 to CIO 2049	D20400 to D20499
5	Unit #5	CIO 2050 to CIO 2059	D20500 to D20599
6	Unit #6	CIO 2060 to CIO 2069	D20600 to D20699
7	Unit #7	CIO 2070 to CIO 2079	D20700 to D20799
8	Unit #8	CIO 2080 to CIO 2089	D20800 to D20899
9	Unit #9	CIO 2090 to CIO 2099	D20900 to D20999
10	Unit #10	CIO 2100 to CIO 2109	D21000 to D21099
to	to	to	to
n	Unit #n	CIO 2000 + (n × 10) to CIO 2000 + (n × 10) + 9	D20000 + (n × 100) to D20000 + (n × 100) + 99
to	to	to	to
95	Unit #95	CIO 2950 to CIO 2959	D29500 to D29599

Note If two or more Special I/O Units are assigned the same unit number, a “UNIT No. DPL ERR” error (in the Programming Console) will be generated (A40113 will turn ON) and the PLC will not operate.

6-5-3 Special I/O Unit Restart Bits

To restart the Analog Output Unit after changing the contents of the DM Area or correcting an error, cycle the power to the PLC or turn ON the Special I/O Unit Restart Bit.

Special I/O Unit Area word address	Function	
A50200	Unit No. 0 Restart Bit	Restarts the Unit when turned ON.
A50201	Unit No. 1 Restart Bit	
to	to	
A50215	Unit No. 15 Restart Bit	
A50300	Unit No. 16 Restart Bit	
to	to	
A50715	Unit No. 95 Restart Bit	

Note Replace the Unit if the error is not cleared even though the power supply is cycled or the Restart Bit is turned ON.

6-5-4 Fixed Data Allocations

DM Area

The initial settings of the Analog Output Unit are set according to the data allocated in the Special I/O Unit Area in the DM Area. Settings, such as the outputs used, and the analog output signal ranges must be set in this area.

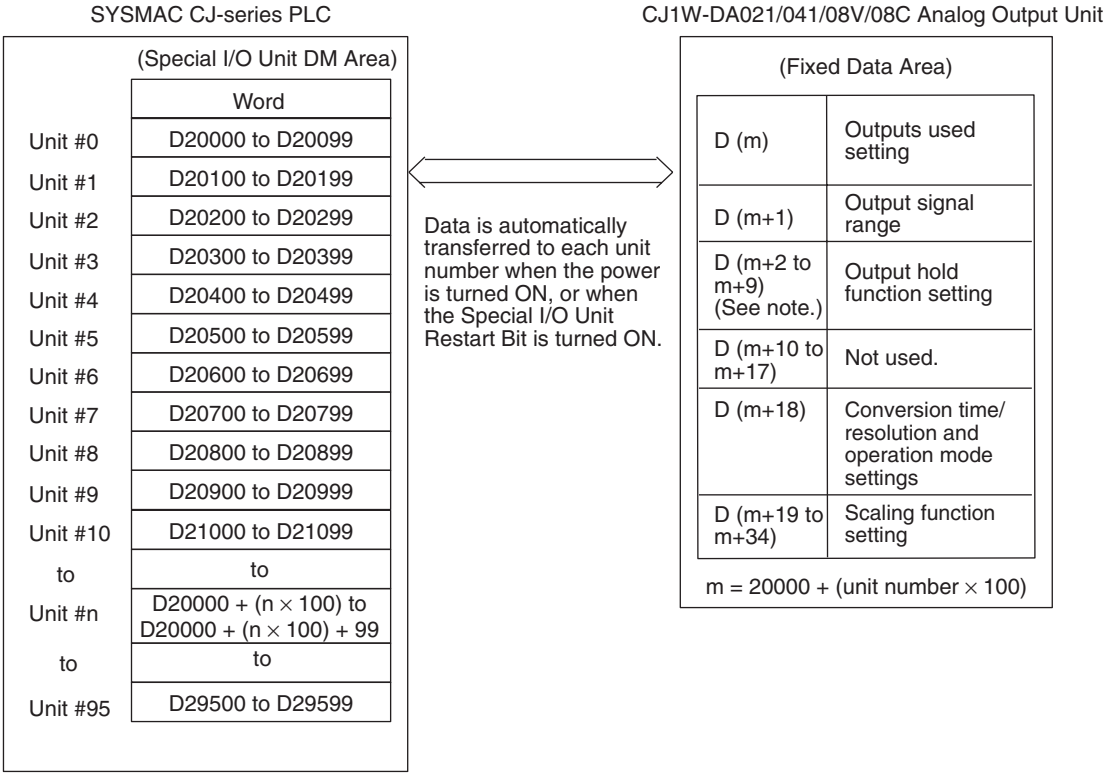

Note

1. The words in the Special I/O Unit Area in the DM Area that are allocated to the Analog Output Unit are set using the unit number switches on the front panel of the Unit. Refer to *6-3-2 Unit Number Switches* for details on the method used to set the unit number switches.
2. If two or more Special I/O Units are assigned the same unit number, a "UNIT No. DPL ERR" error (in the Programming Console) will be generated (A40113 will turn ON) and the PLC will not operate.

Allocations in DM Area

The following table shows the allocation of DM words and bits for both normal and adjustment mode.

CJ1W-DA021

DM Area word	Bits															
	15	14	13	12	11	10	9	8	7	6	5	4	3	2	1	0
D (m)	Not used.								Not used.						Output use setting	
															Output 2	Output 1
D (m+1)	Not used.								Not used.				Output signal range setting			
													Output 2		Output 1	
D (m+2)	Not used.								Output 1: Output status when conversion stopped							
D (m+3)	Not used.								Output 2: Output status when conversion stopped							

CJ1W-DA041

DM Area word	Bits															
	15	14	13	12	11	10	9	8	7	6	5	4	3	2	1	0
D (m)	Not used.								Not used.				Output use setting			
													Output 4	Output 3	Output 2	Output 1
D (m+1)	Not used.								Output signal range setting							
									Output 4		Output 3		Output 2		Output 1	
D (m+2)	Not used.								Output 1: Output status when conversion stopped							
D (m+3)	Not used.								Output 2: Output status when conversion stopped							
D (m+4)	Not used.								Output 3: Output status when conversion stopped							
D (m+5)	Not used.								Output 4: Output status when conversion stopped							

CJ1W-DA08V/08C

DM Area word	Bits															
	15	14	13	12	11	10	9	8	7	6	5	4	3	2	1	0
D (m)	Not used.								Output use setting							
									Output 8	Output 7	Output 6	Output 5	Output 4	Output 3	Output 2	Output 1
D (m+1)	Output signal range setting															
	Output 8		Output 7		Output 6		Output 5		Output 4		Output 3		Output 2		Output 1	
D (m+2)	Not used.								Output 1: Output status when conversion stopped							
D (m+3)	Not used.								Output 2: Output status when conversion stopped							
D (m+4)	Not used.								Output 3: Output status when conversion stopped							
D (m+5)	Not used.								Output 4: Output status when conversion stopped							
D (m+6)	Not used.								Output 5: Output status when conversion stopped							
D (m+7)	Not used.								Output 6: Output status when conversion stopped							
D (m+8)	Not used.								Output 7: Output status when conversion stopped							
D (m+9)	Not used.								Output 8: Output status when conversion stopped							
D (m+10 to m+17)	Not used.															
D (m+18)	Conversion time/resolution setting								Operation mode setting							
D (m+19)	Output 1 scaling lower limit															
D (m+20)	Output 1 scaling upper limit															
D (m+21)	Output 2 scaling lower limit															
D (m+22)	Output 2 scaling upper limit															
D (m+23)	Output 3 scaling lower limit															
D (m+24)	Output 3 scaling upper limit															
D (m+25)	Output 4 scaling lower limit															
D (m+26)	Output 4 scaling upper limit															
D (m+27)	Output 5 scaling lower limit															
D (m+28)	Output 5 scaling upper limit															
D (m+29)	Output 6 scaling lower limit															
D (m+30)	Output 6 scaling upper limit															
D (m+31)	Output 7 scaling lower limit															
D (m+32)	Output 7 scaling upper limit															
D (m+33)	Output 8 scaling lower limit															
D (m+34)	Output 8 scaling upper limit															

Note For the DM word addresses, m = D20000 + (unit number × 100).

Set Values and Stored Values

Item		Contents	Page
Output	Use setting	0: Not used. 1: Used.	238, 244
	Output signal range (See note 1.)	00: –10 to 10 V 01: 0 to 10 V 10: 1 to 5 V/4 to 20 mA (See note 2.) 11: 0 to 5 V	238, 244
	Output status when stopped	00: CLR Outputs 0 or minimum value of each range. (See note 3.) 01: HOLD Holds output just before stopping. 02: MAX Outputs maximum value of range.	247
	Conversion time/resolution setting	00: Conversion time: 1 ms; resolution: 4,000 01: Conversion time: 250 μs; resolution: 8,000	247
	Operation mode setting	00: Normal mode 01: Adjustment mode	232
	Scaling settings	Any value other than 0 within range of ±32,000 (8300 hex to 7D00 hex) as long as the upper limit is not equal to the lower limit.	249

Note

1. When using a CJ1W-DA08C, these output signal range settings are invalid and the contents will be ignored. The output signal range for the CJ1W-DA08C is fixed at 4 to 20 mA.
2. The output signal ranges 1 to 5 V and 4 to 20 mA are switched using the output terminal connections. For details, refer to *6-4 Wiring*. (The CJ1W-DA08V supports only voltage outputs.)
3. The values output for the signal ranges will be 0 V for the range of ±10 V, and the minimum value for the other ranges. For details, refer to *6-6-4 Output Hold Function*.

6-5-5 I/O Refresh Data Allocations

I/O refresh data for the Analog Output Unit is exchanged according to the allocations in the Special I/O Unit Area.

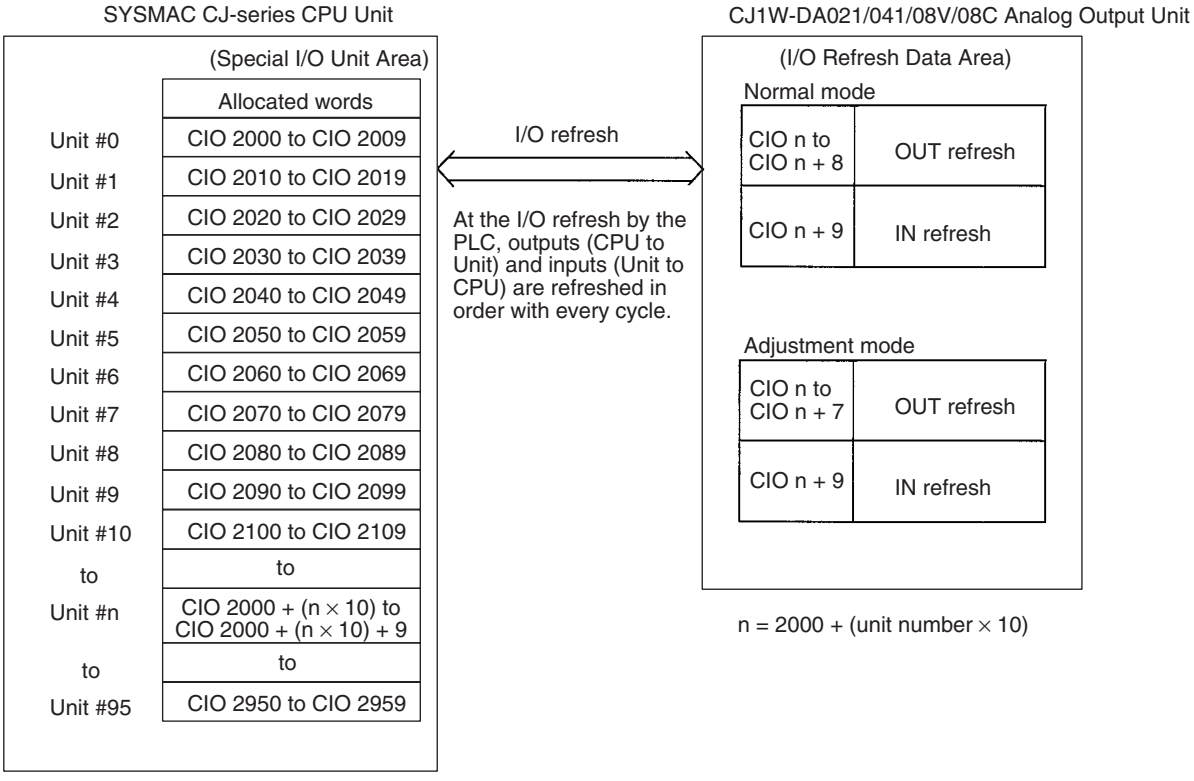

Note

1. The Special I/O Unit Area words that are occupied by the Analog Output Unit are set using the unit number switches on the front panel of the Unit. Refer to *6-3-2 Unit Number Switches* for details on the method used to set the unit number switches.
2. If two or more Special I/O Units are assigned the same unit number, a "UNIT No. DPL ERR" error (in the Programming Console) will be generated (A40113 will turn ON) and the PLC will not operate.

Allocations for Normal Mode

For normal mode, with CJ1W-DA021/041 Units, set the operation mode switch on the front panel of the Unit as shown in the following diagram. (The CJ1W-DA08V/08C does not have this switch. Change the mode by setting bits 00 to 07 in D(m+18) to 00 hex.)

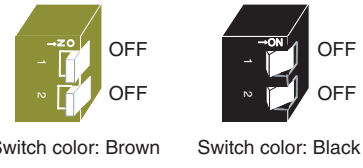

Note The pins are ON when set to the right and OFF when set to the left.

The allocation of words and bits in the CIO Area is shown in the following table.

CJ1W-DA021

I/O	Word	Bits															
		15	14	13	12	11	10	9	8	7	6	5	4	3	2	1	0
Output (CPU to Unit)	n	Not used.								Not used.				Conversion enable			
														---	---	Output 2	Output 1
	n + 1	Output 1 set value															
		16^3				16^2				16^1				16^0			
	n + 2	Output 2 set value															
	n + 3	Not used.															
	n + 4	Not used.															
	n + 5	Not used.															
	n + 6	Not used.															
	n + 7	Not used.															
	n + 8	Not used.															
Input (Unit to CPU)	n + 9	Alarm Flags								Not used.				Output setting error			
														---	---	Output 2	Output 1

CJ1W-DA041

I/O	Word	Bits															
		15	14	13	12	11	10	9	8	7	6	5	4	3	2	1	0
Output (CPU to Unit)	n	Not used.								Not used.				Conversion enable			
														Output 4	Output 3	Output 2	Output 1
	n + 1	Output 1 set value															
		16^3				16^2				16^1				16^0			
	n + 2	Output 2 set value															
	n + 3	Output 3 set value															
	n + 4	Output 4 set value															
	n + 5	Not used.															
	n + 6	Not used.															
	n + 7	Not used.															
	n + 8	Not used.															
Input (Unit to CPU)	n + 9	Alarm Flags								Not used.				Output setting error			
														Output 4	Output 3	Output 2	Output 1

CJ1W-DA08V/08C

I/O	Word	Bits															
		15	14	13	12	11	10	9	8	7	6	5	4	3	2	1	0
Output (CPU to Unit)	n	Not used.								Conversion enable							
		---								Output 8	Output 7	Output 6	Output 5	Output 4	Output 3	Output 2	Output 1
	n + 1	Output 1 set value															
		16^3				16^2				16^1				16^0			
	n + 2	Output 2 set value															
	n + 3	Output 3 set value															
	n + 4	Output 4 set value															
	n + 5	Output 5 set value															
	n + 6	Output 6 set value															
	n + 7	Output 7 set value															
	n + 8	Output 8 set value															
Input (Unit to CPU)	n + 9	Alarm Flags								Output setting error							
										Output 8	Output 7	Output 6	Output 5	Output 4	Output 3	Output 2	Output 1

Note For the CIO word addresses, n = CIO 2000 + unit number × 10.

Set Values and Stored Values

Item	Contents	Page
Conversion enable	0: Conversion output stopped. 1: Conversion output begun.	247
Set value	16-bit binary data	246
Output setting error	0: No error 1: Output setting error	251
Alarm Flags	Bits 00 to 07: Output setting error (CJ1W-DA021: bits 00 and 01, CJ1W-DA041: bits 00 to 03) Bit 08: Scaling data setting error Bit 09: Not used. Bit 10: Output hold setting error Bit 11: Not used. Bit 12: Conversion time/resolution or operation mode setting error Bit 15: Operating in adjustment mode (Always 0 in normal mode.)	241, 265

Allocation for Adjustment Mode

For adjustment mode, set the operation mode switch on the front panel of the Unit as shown in the following diagram. When the Unit is set for adjustment mode, the ADJ indicator on the front panel of the Unit will flash.
(The CJ1W-DA08V/08C does not have this switch. Change the mode by setting bits 00 to 07 in D (m+18) to C1 hex.)

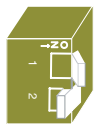

Switch color: Brown

Switch color: Black

Note The pins are ON when set to the right and OFF when set to the left.

The allocation of CIO words and bits is shown in the following table.

I/O	Word	Bits															
		15	14	13	12	11	10	9	8	7	6	5	4	3	2	1	0
Output (CPU to Unit)	n	Not used.								Outputs to be adjusted							
										1 (fixed)				1 to 8 (1 and 2 for CJ1W-DA021, 1 to 4 for CJ1W-DA041)			
	n + 1	Not used.								Not used.		Clr	Set	Up	Down	Gain	Off-set
	n + 2	Not used.															
	n + 3	Not used.															
	n + 4	Not used.															
	n + 5	Not used.															
	n + 6	Not used.															
	n + 7	Not used.															
Input (Unit to CPU)	n + 8	Conversion value or set value at time of adjustment															
		16^3				16^2				16^1				16^0			
	n + 9	Alarm Flags								Not used.							

Note For the CIO word addresses, n = CIO 2000 + (unit number × 10).

Set Values and Stored Values

Refer to *6-7 Adjusting Offset and Gain* or *6-8-2 Alarms Occurring at the Analog Output Unit* for further details.

Item	Contents
Output to be adjusted	Sets output to be adjusted. Leftmost digit: 1 (fixed) Rightmost digit: 1 to 8 (1 to 4 (DA041), 1 and 2 (DA021))
Offset (Offset Bit)	When ON, adjusts offset deviation.
Gain (Gain Bit)	When ON, adjusts gain deviation.
Down (Down Bit)	Decrements the adjustment value while ON.
Up (Up Bit)	Increments the adjustment value while ON.
Set (Set Bit)	Sets adjusted value and writes to EEPROM.
Clr (Clear Bit)	Clears adjusted value. (Returns to default status)
Conversion value for adjustment	The conversion value for adjustment is stored as 16 bits of binary data.
Alarm Flags	Bit 12: Not used Bit 13: Output number setting error (in adjustment mode) Bit 14: EEPROM write error (in adjustment mode) Bit 15: Operating in adjustment mode (always 1 in adjustment mode)

6-6 Analog Output Functions and Operating Procedures

6-6-1 Output Settings and Conversions

Output Numbers

The Analog Output Unit converts only analog outputs specified by output numbers 1 to 8 (1 to 4 for the CJ1W-DA041, and 1 and 2 for the CJ1W-DA021). To specify the analog outputs to be used, turn ON from a Programming Device the D(m) bits in the DM Area shown in the following diagram.

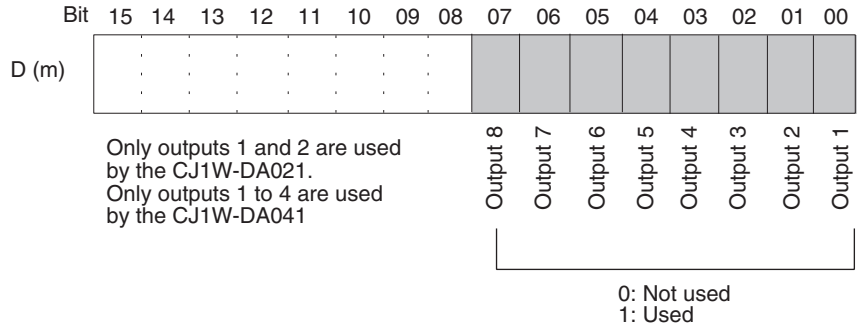

The analog output conversion cycle can be shortened by setting any unused output numbers to 0.

Conversion cycle = (1 ms) (See note 3.) × (Number of outputs used)

Note

1. For the DM word addresses, m = D20000 + (unit number × 100).
2. Output numbers not used (set to 0) will be output at 0 V.
3. With the CJ1W-DA08V, the value will be 250 μs when set for a conversion time of 250 μs and a resolution of 8,000.

Output Signal Range

Any of four types of output signal range (–10 to 10 V, 0 to 10 V, 1 to 5 V, 4 to 20 mA, and 0 to 5 V) can be selected for each of the outputs (only voltage output for the CJ1W-DA08V). (The output signal range for the CJ1W-DA08C is 4 to 20 mA only.) To specify the output signal range for each output, use a Programming Device to set the D (m+1) bits in the DM Area as shown in the following diagram.

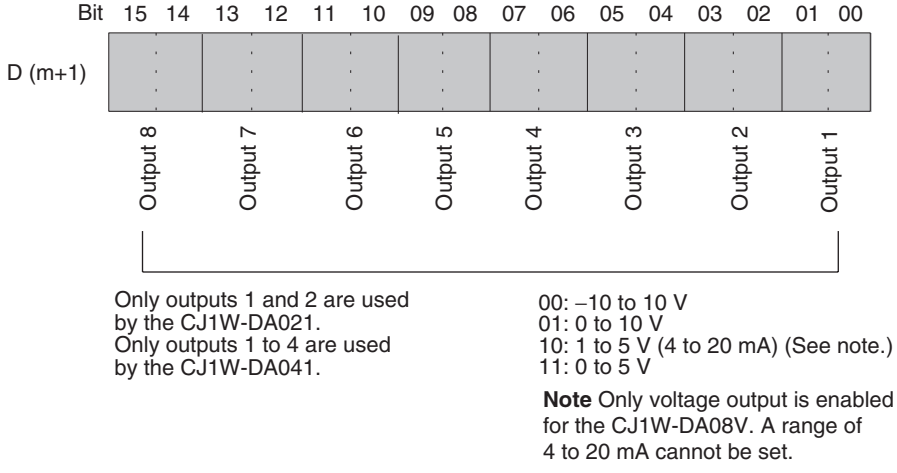

Note

1. For the DM word addresses, m = D20000 + (unit number × 100).
2. The 1 to 5 V output range and the 4 to 20 mA output range are switched by changing the terminal connections.
3. When data memory settings have been carried out using a Programming Device, be sure to either cycle the power supply to the PLC, or turn ON the

Special I/O Unit Restart Bit. The contents of the data memory settings will be transferred to the Special I/O Unit when the power is turned ON or the Special I/O Unit Restart Bit is ON.

4. The CJ1W-DA08C provides current output (4 to 20 mA) only. The CJ1W-DA08C cannot be used for voltage output.

Writing Set Values

Analog output set values are written to CIO words n+1 to n+8 (CIO words n+1 to n+4 for the CJ1W-DA041, n+1 and n+2 for the CJ1W-DA021).

Word	Function	Stored value
n+1	Output 1 set value	16-bit binary data
n+2	Output 2 set value	
n+3	Output 3 set value	
n+4	Output 4 set value	
n+5	Output 5 set value	
n+6	Output 6 set value	
n+7	Output 7 set value	
n+8	Output 8 set value	

For the CIO word addresses, n = CIO 2000 + (unit number × 10).

Use MOV(021) or XFER(070) to write values in the user program.

Example 1

In this example, the set value from only one output is written. (The unit number is 0.)

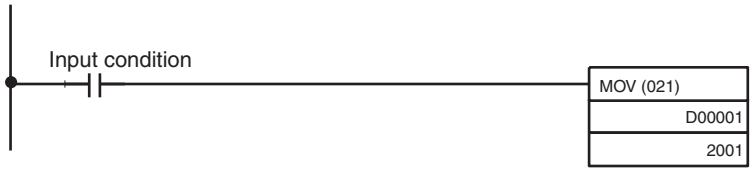

The set value stored in D 00001 is written to CIO word 2001 (output number 1).

Example 2

In this example, multiple set values are written. (The unit number is #0.)

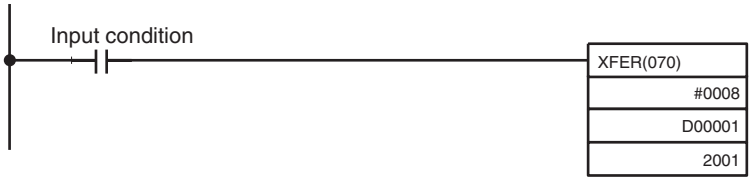

The set values stored in D 00001 to D 00008 are written to CIO words 2001 to 2008 (outputs 1 to 8).

Note If the set value has been written outside the specified range, an output setting error will occur, and the value set by the output hold function will be output.

6-6-2 Conversion Time/Resolution Setting (CJ1W-DA08V/08C Only)

This setting is supported only by version-1 Units.

Bits 08 to 15 in DM word m+18 can be used to set the conversion time and resolution for the CJ1W-AD08V/08C to increase speed and accuracy.

This setting applies to analog outputs 1 to 8, i.e., there are not individual settings for each input.

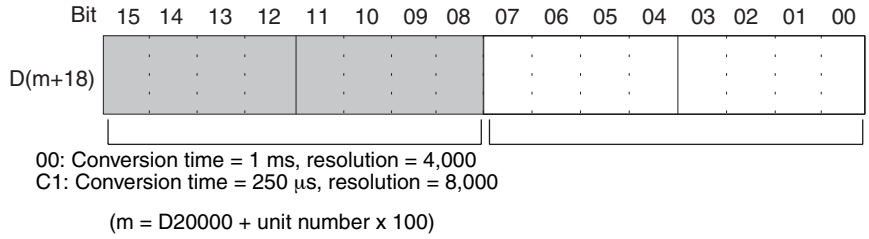

Note After making the DM settings from a Programming Device, it will be necessary to either turn the power to the PLC OFF and ON, or turn ON the Special I/O Unit Restart Bit in order to transfer the contents of the DM settings to the Special I/O Unit.

6-6-3 Starting and Stopping Conversion

To begin analog output conversion, turn ON the corresponding Conversion Enable Bit (word n, bits 00 to 03) from the user's program.

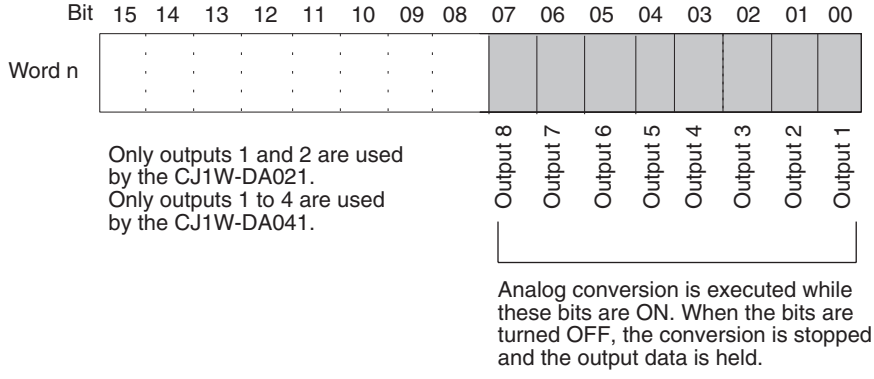

Note

1. For the CIO word addresses, n = CIO 2000 + (unit number × 10).
2. The analog output when conversion is stopped will depends on the output signal range setting and output hold setting. Refer to *6-6-1 Output Settings and Conversions* and *6-6-4 Output Hold Function*.
3. Conversion will not begin under the following conditions even if the Conversion Enable Bit is turned ON. Refer to *6-6-4 Output Hold Function*.
   - In adjustment mode, when something other than the output number is output during adjustment.
   - When there is an output setting error.
   - When a fatal error occurs at the PLC.
4. When the operation mode for the CPU Unit is changed from RUN mode or MONITOR mode to PROGRAM mode, the Conversion Enable Bits will all turn OFF. They will also turn OFF when the power supply to the PLC is turned ON. The output status at this time depends on the output hold function.

In this example, conversion is begun for analog output number 1. (The unit number is 0.)

6-6-4 Output Hold Function

The Analog Output Unit stops conversion under the following conditions and outputs the value set for the output hold function.

1,2,3...

1. When the Conversion Enable Bit is OFF. Refer to *Allocations for Normal Mode* on page 241 and *6-6-3 Starting and Stopping Conversion*.
2. In adjustment mode, when something other than the output number is output during adjustment. Refer to *Allocation for Adjustment Mode* on page 243.
3. When there is an output setting error. Refer to *Allocations for Normal Mode* on page 241 and page 252.
4. When a fatal error occurs at the PLC.
5. When there is an I/O bus error.
6. When the CPU Unit is in LOAD OFF status.
7. When there is a WDT (watchdog timer) error in the CPU Unit.

CLR, HOLD, or MAX can be selected for the output status when conversion stops.

Output signal range	CLR	HOLD	MAX
0 to 10 V	–0.5 V (Min. –5% of full scale)	Voltage that was output just prior to stopping.	10.5 V (Max. +5% of full scale)
–10 to 10 V	0.0 V	Voltage that was output just prior to stopping.	11.0 V (Max. +5% of full scale)
1 to 5 V	0.8 V (Min. –5% of full scale)	Voltage that was output just prior to stopping.	5.2 V (Max. +5% of full scale)
0 to 5 V	–0.25 V (Min. –5% of full scale)	Voltage that was output just prior to stopping.	5.25 V (Max. +5% of full scale)
4 to 20 mA	3.2 mA (Min. –5% of full scale)	Current that was output just prior to stopping.	20.8 mA (Max. +5% of full scale)

The above values may fluctuate if offset/gain adjustment has been applied.

To set the output hold function, use a Programming Device to set the DM Area words D(m+2) to D(m+9) as shown in the following table. (See note.)

DM Area word	Function	Set value
D (m+2)	Output 1: Output status when conversion stops	xx00:CLR Output 0 or minimum value of range (–5%). xx01:HOLD Hold output value prior to stop. xx02: MAX Output maximum value of range (105%). Set any value in the left-most bytes (xx).
D (m+3)	Output 2: Output status when conversion stops	
D (m+4)	Output 3: Output status when conversion stops	
D (m+5)	Output 4: Output status when conversion stops	
D (m+6)	Output 5: Output status when conversion stops	
D (m+7)	Output 6: Output status when conversion stops	
D (m+8)	Output 7: Output status when conversion stops	
D (m+9)	Output 8: Output status when conversion stops	

Note

1. Only D (m+2) and D (m+3) are used by the CJ1W-DA021, and only D (m+2) to D (m+5) are used by the CJ1W-DA041.
2. For the DM word addresses, m = D20000 + (unit number × 100).
3. When DM Area settings have been carried out using a Programming Device, be sure to either cycle the power supply to the PLC, or turn ON the Special I/O Unit Restart Bit. The contents of the initial settings in the DM Area will be transferred to the Special I/O Unit when the power is turned ON or the Special I/O Unit Restart Bit is turned ON.

6-6-5 Output Scaling (CJ1W-DA08V/08C Only)

When upper and lower limits have been preset in 16-bit binary data in the CPU Unit's DM Area within a range of –32,000 to 32,000 decimal (from 8300 to 7D00 hex), analog output set values with the upper and lower limits taken as full scale and are converted from digital to analog. (See notes 1 and 2.) This scaling function eliminates the previous necessity of providing programs for numeric conversion from specified units. It is only enabled, however, for a conversion time of 1 ms and a resolution of 4,000 (and not for a conversion time of 250 μs and a resolution of 8,000).

Note

1. To set the upper or lower limit to a negative number, use two's complement. (Set 8300 to FFF for –32,000 to –1.)
2. Addresses m = D20000 + unit number × 100 are allocated in the DM Area.
3. The upper limit is normally set to be greater than the lower limit, but it is also possible to set lower limit to be greater than the upper limit for reverse scaling.
4. Actual D/A conversion is executed at up to –5% to +105% of full scale. If values exceeding this range are set, an output setting value error will occur and the output hold function will operate.
5. When setting upper and lower limits in the DM Area in the specified units, be sure to make the settings in 16-bit binary data (with negative values set as two's complement).
6. The scaling function is enabled for only a conversion time of 1 ms and a resolution of 4,000 (and not for a conversion time of 250 μs and a resolution of 8,000).
7. If the scaling upper limit equals the lower limit, or if the scaling upper limit or lower limit is outside the range of ±32,000, a scaling data setting error is

generated and scaling cannot be executed. Operation starts normally when both the upper and lower limits are set to 0000 (the default values).

Setting Upper and Lower Limits for Output Scaling

Set the upper and lower limits for scaling for outputs 1 and 2 in words D (m+19) to D (m+22) of the DM Area, as shown below.

Note For decimal numbers –32,000 to +32,000, set 16-bit binary data (8300 to 7D00).

DM word	Bits															
	15	14	13	12	11	10	9	8	7	6	5	4	3	2	1	0
D (m+19)	Output 1 scaling lower limit															
D (m+20)	Output 1 scaling upper limit															
D (m+21)	Output 2 scaling lower limit															
D (m+22)	Output 2 scaling upper limit															

Example Setting 1

Set the following conditions in D (m+19) to D (m+22). (The values shown in parentheses are binary data.)

Setting condition	Set value
Output signal range	0 to 10 V
Scaling lower limit	0000 (0000)
Scaling upper limit	10,000 (2710)

When Output Signal Range is 0 V to 10 V

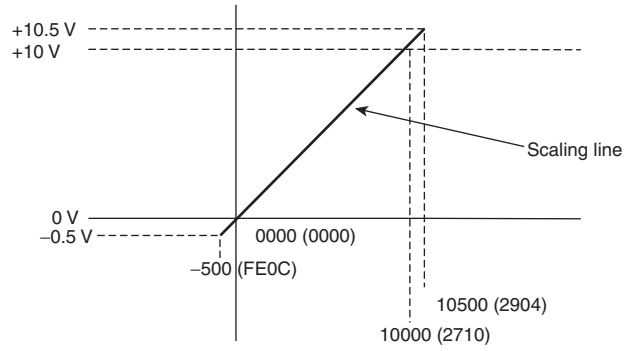

The following table shows the correspondence between output signals and converted scaling values. (The values shown in parentheses are 16-bit binary data.)

Output set value	Output signal
0000 (0000)	0 V
10,000 (2710)	10 V
–500 (FE0C)	–0.5 V
10,500 (2904)	10.5 V

Example Setting 2 (Reverse Scaling)

Set the following conditions in D (m+27) to D (m+34). (The values shown in parentheses are binary data.)

Setting condition	Set value
Output signal range	0 to 10 V
Scaling lower limit	10,000 (2710)
Scaling upper limit	0000 (0000)

When Output Signal Range is 0 V to 10 V (Reverse Scaling)

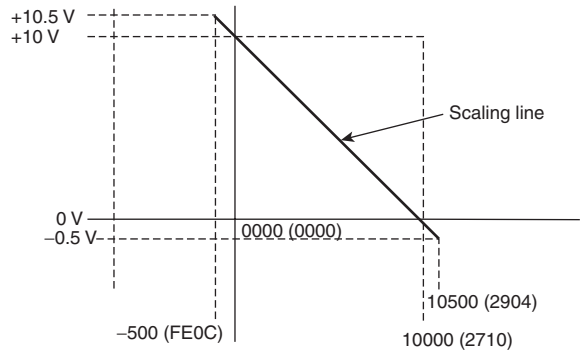

The following table shows the correspondence between output signals and converted scaling values. (The values shown in parentheses are 16-bit binary data.)

Conversion result	Output signal
10,000 (2710)	0 V
0000 (0000)	10 V
10,500 (2904)	–0.5 V
–500 (FE0C)	10.5 V

6-6-6 Output Setting Errors

If the analog output set value is greater than the specified range, a setting error signal will be stored in CIO word n+9, bits 00 to 07.

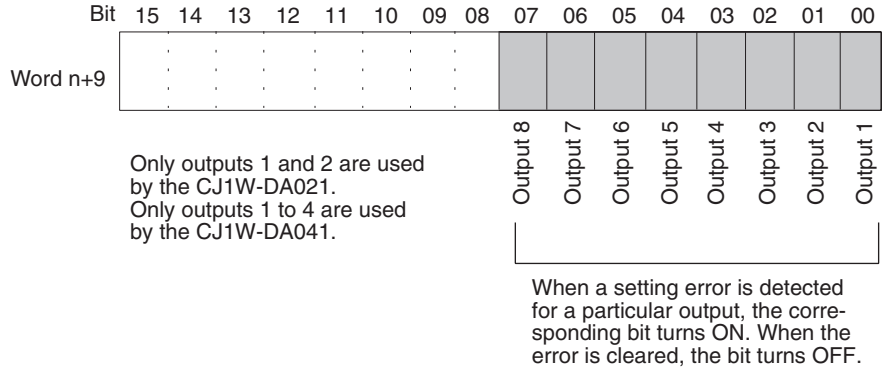

Note
1. For the CIO word addresses, n = CIO 2000 + (unit number × 10).
2. The voltage for an output number at which a setting error has occurred will be output according to the output hold function.

6-7 Adjusting Offset and Gain

6-7-1 Adjustment Mode Operational Flow

The adjustment mode enables the output of the connected devices to be calibrated.

This function adjusts the output voltage according to the offset value and gain value at the input device, and sets the settings values at the Unit at that time to 0000 and 0FA0 (07D0 if the range is ±10 V) respectively.

For example, suppose that the specifications range for the external input device (e.g., indicator, etc.) is 100.0 to 500.0 when using in the range 1 to 5 V. Also, suppose that when voltage is output at the Analog Output Unit at a set value of 0000, the external input device actually displays 100.5 and not 100.0. It is possible to make settings to adjust the output voltage (making it smaller in this case) so that 100.0 is displayed and to make 0000 (not FFFB as in this case) the set value for which 100.0 is displayed.

Similarly for gain values, suppose that when voltage is output at the Analog Output Unit at a set value of 0FA0, the external input device actually displays 500.5 and not 500.0. It is possible to make settings to adjust the output voltage (make it smaller in this case) so that 500.0 is displayed and to make 0FA0 (not 0F9B as in this case) the set value for which 500.0 is displayed.

External input device display	Set value before adjustment (word n+8)	Set value after adjustment
100.0	FFFB (FFF0)	0000 (0000)
500.0	0F9B (1F36)	0FA0 (1F40)

(Values in parentheses are for a resolution of 8,000.)

CJ1W-DA021/041

The following diagram shows the flow of operations when using the adjustment mode for adjusting offset and gain.

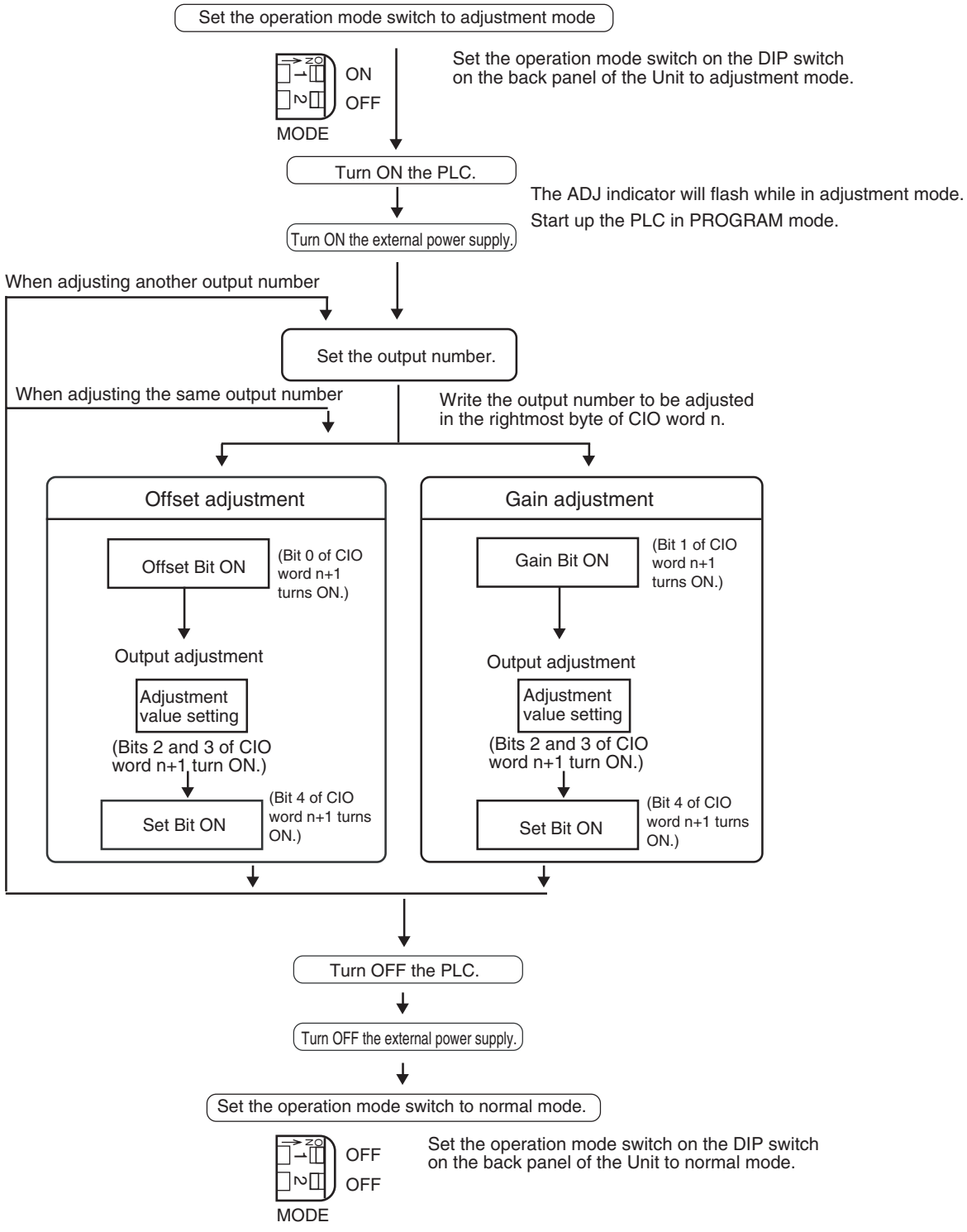

⚠ **Caution** Be sure to turn OFF the power to the PLC before changing the setting of the operation mode switch.

⚠ **Caution** Set the PLC to PROGRAM mode when using the Analog Output Unit in adjustment mode. If the PLC is in MONITOR mode or RUN mode, the Analog Output Unit will stop operating, and the output values that existed immediately before this stoppage will be retained.

⚠ **Caution** Always perform adjustments in conjunction with offset and gain adjustments.

CJ1W-DA08V/08C

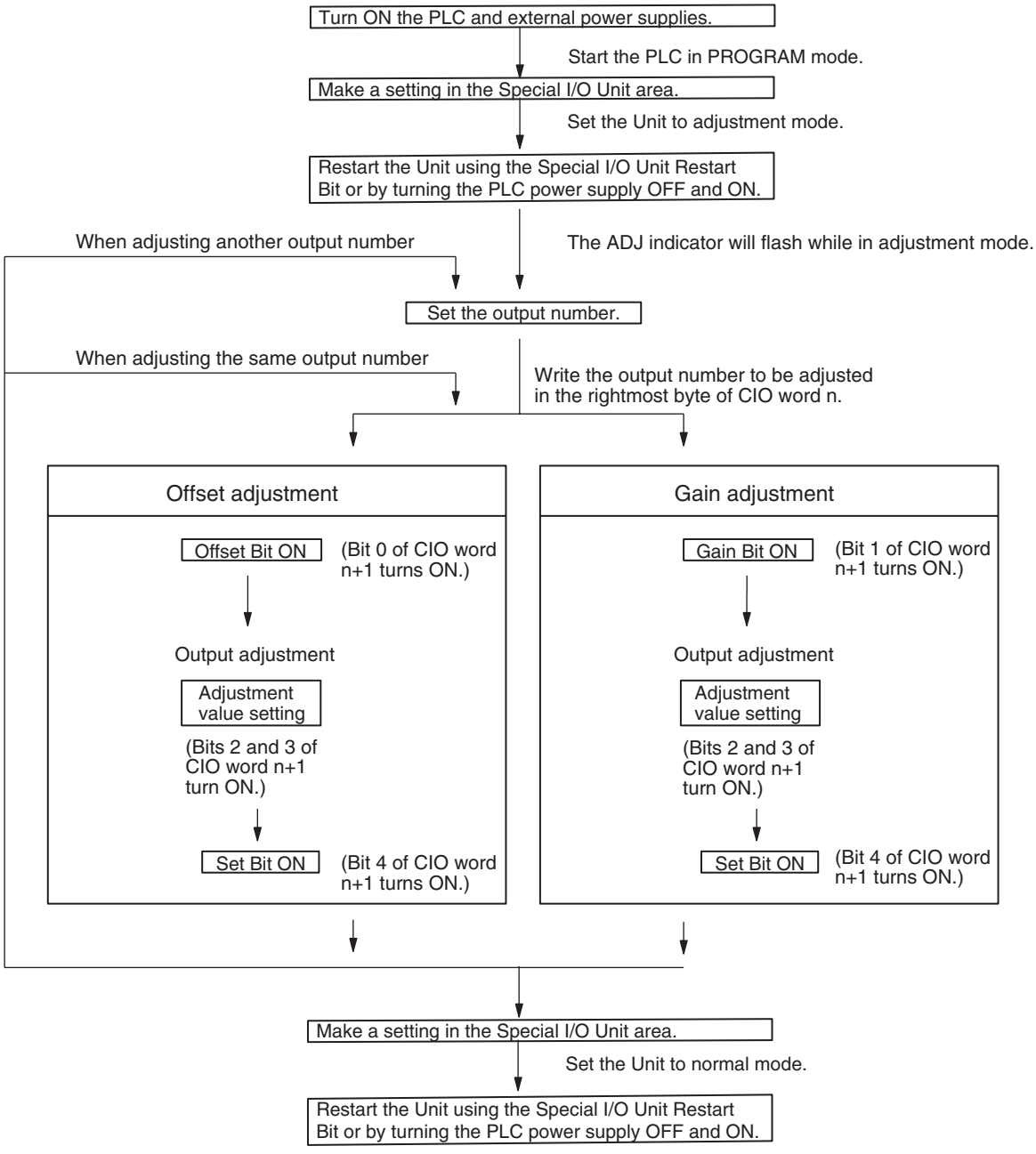

⚠ **Caution** Set the PLC to PROGRAM mode when using the Analog Output Unit in adjustment mode. If the PLC is in MONITOR mode or RUN mode, the Analog Output Unit will stop operating, and the output values that existed immediately before this stoppage will be retained.

⚠ **Caution** Always perform adjustments in conjunction with offset and gain adjustments.

6-7-2 Output Offset and Gain Adjustment Procedures

Specifying Output Number to be Adjusted

To specify the output number to be adjusted, write the value to the rightmost byte of CIO word n as shown in the following diagram.

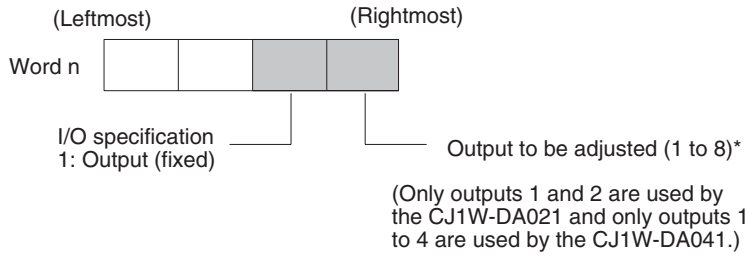

For the CIO word addresses, n = CIO 2000 + unit number × 10.

The following example uses output number 1 adjustment for illustration. (The unit number is 0.)

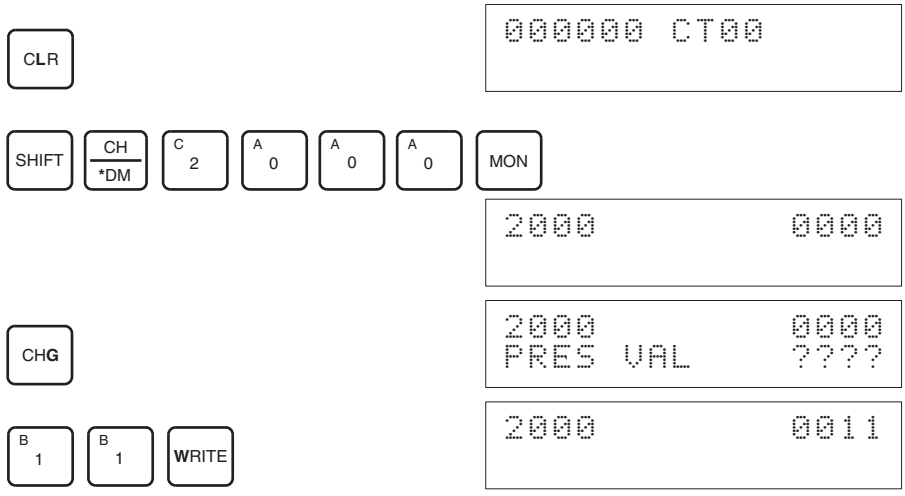

Bits Used for Adjusting Offset and Gain

The CIO word n+1 bits shown in the following diagram are used for adjusting offset and gain.

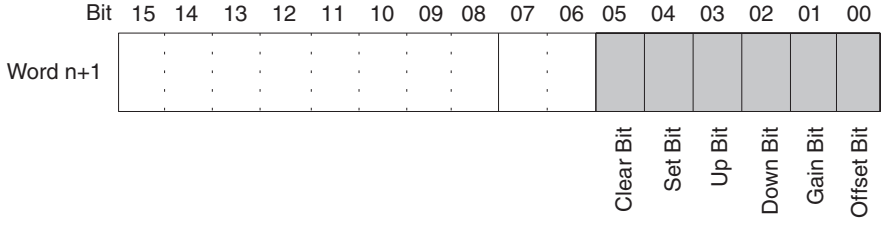

Offset Adjustment

The procedure for adjusting the analog output offset is explained below. As shown in the following diagram, the set value is adjusted so that the analog output reaches the standard value (0 V/1 V/4 mA).

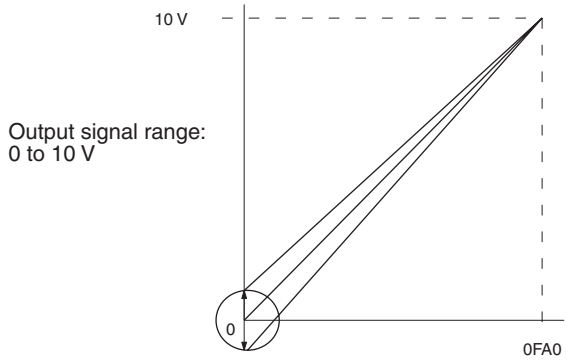

Offset adjustment output range

The following example uses output number 1 adjustment for illustration. (The unit number is 0.)

1,2,3...

1. Turn ON bit 00 (the Offset Bit) of CIO word n+1. (Hold the ON status.)

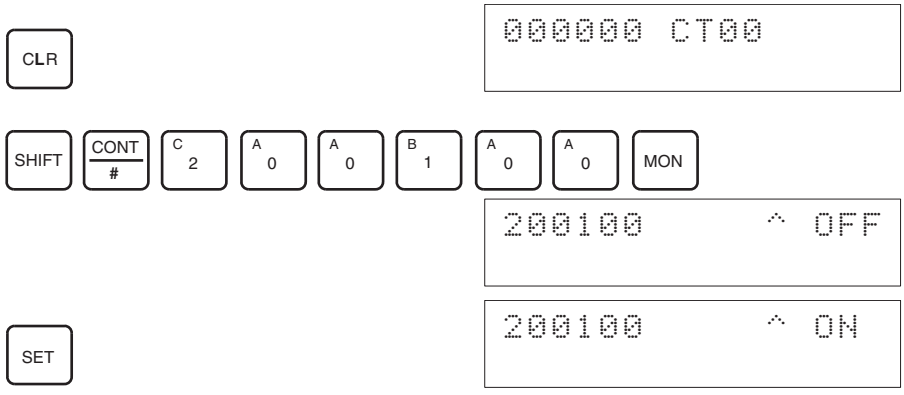

2. Check whether the output devices are connected.

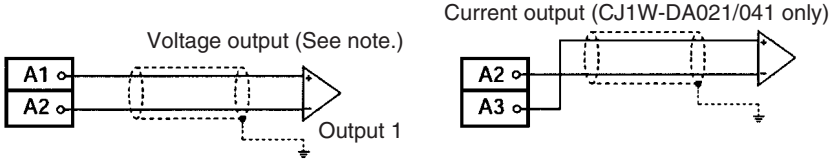

Note The output is current output when using a CJ1W-DA08C.

3. Monitor CIO word n+8 and check the set value while the Offset Bit is ON.

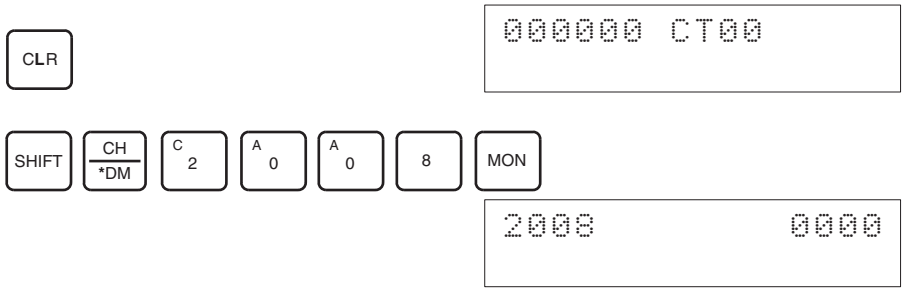

4. Change the set value so that the output voltage are as shown in the following table. The data can be set within the indicated ranges.

Output signal range	Possible output voltage/current adjustment	Output range
0 to 10 V	–0.5 to 0.5 V	FF38 to 00C8 (FE70 to 0190)
–10 to 10 V	–1.0 to 1.0 V	
1 to 5 V	0.8 to 1.2 V	
0 to 5 V	–0.25 to 0.25 V	
4 to 20 mA	3.2 to 4.8 mA	

(Values in parentheses are for a resolution of 8,000.)

Change the set value, using the Up Bit (bit 03 of word n+1) and the Down Bit (bit 02 of word n+1).

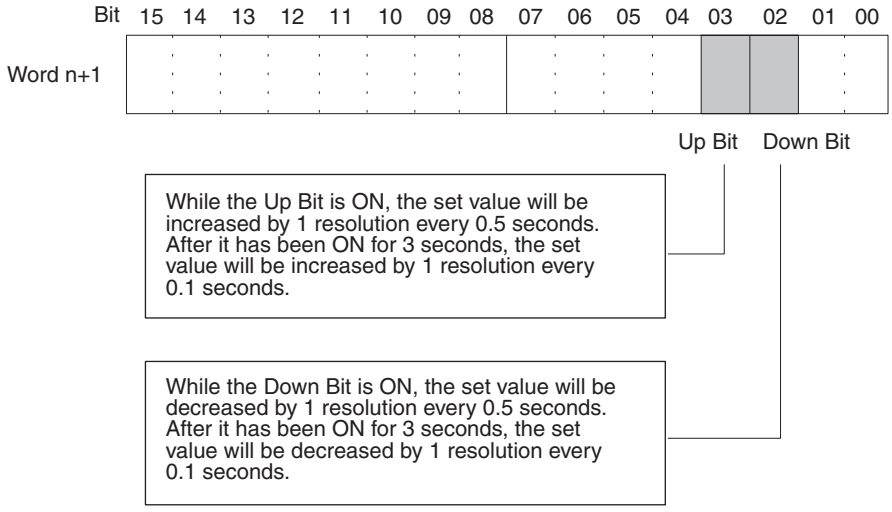

- The following example increases the output voltage.

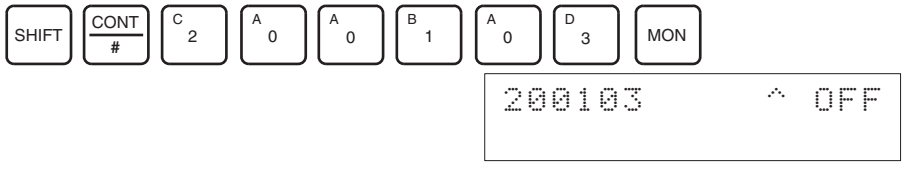

The bit will remain ON until the output becomes an appropriate value, at which time, it will turn OFF.

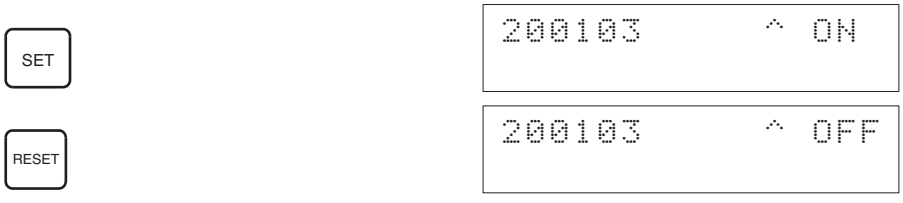

- The following example decreases the output voltage.

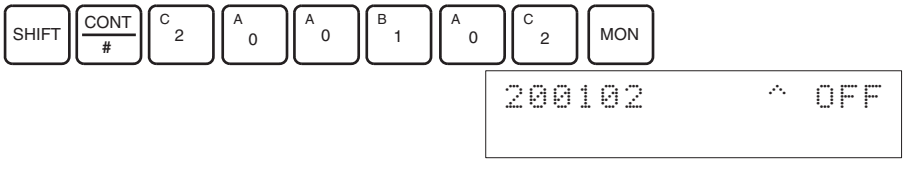

The bit will remain ON until the output becomes an appropriate value, at which time, it will turn OFF.

SET

```
200102      ^ ON
```

RESET

```
200102      ^ OFF
```

5. Check the 0-V/1-V/4 mA output, and then turn bit 04 (the Set Bit) of CIO word n+1 ON and then OFF again.

SHIFT CONT # C 2 A 0 A 0 B 1 A 0 E 4 MON

```
200104      ^ OFF
```

SET

```
200104      ^ ON
```

RESET

```
200104      ^ OFF
```

While the Offset Bit is ON, the offset value will be saved to the Unit's EEPROM when the Set Bit turns ON.

6. To finish the offset adjustment, turn OFF bit 00 (the Offset Bit) of CIO word n+1.

SHIFT CONT # C 2 A 0 A 0 B 1 A 0 A 0 MON

```
200100      ^ ON
```

SET

```
200100      ^ OFF
```

⚠ **Caution** Do not turn OFF the power supply or restart the Unit while the Set Bit is ON (data is being written to the EEPROM). Otherwise, illegal data may be written in the Unit's EEPROM and "EEPROM Errors" may occur when the power supply is turned ON or when the Unit is restarted, causing a malfunction.

⚠ **Caution** When making adjustments, be sure to perform both the offset adjustment and gain adjustment at the same time.

Note The EEPROM can be overwritten 50,000 times.

Gain Adjustment

The procedure for adjusting the analog output gain is explained below. As shown in the following diagram, the set value is adjusted so that the analog output is maximized (to 10 V/5 V/20 mA).

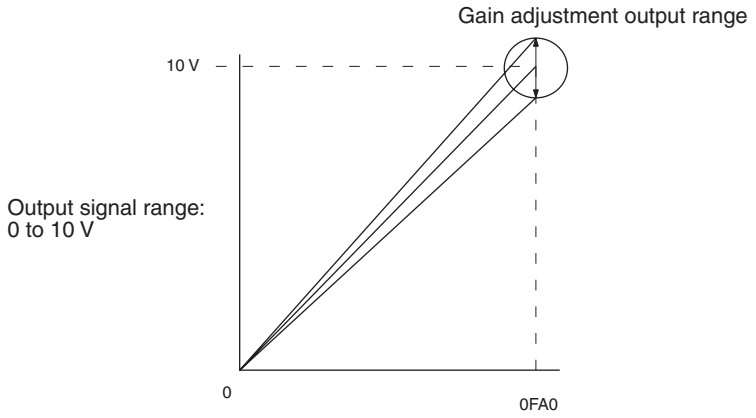

The following example uses output number 1 adjustment for illustration. (The unit number is 0.)

1,2,3... 1. Turn ON bit 01 (the Gain Bit) of CIO word n+1. (Hold the ON status.)

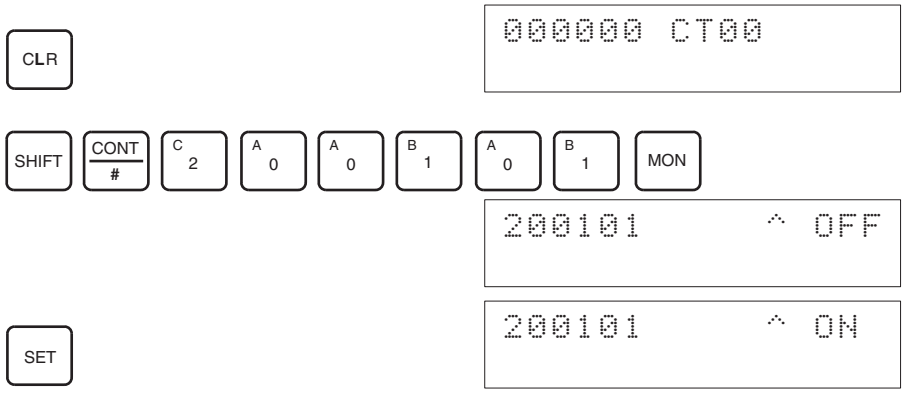

2. Check whether the output devices are connected.

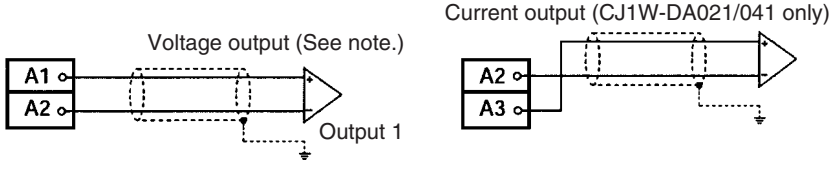

Note The output is current output when using a CJ1W-DA08C.

3. Monitor CIO word n+8 and check the set value while the Gain Bit is ON.

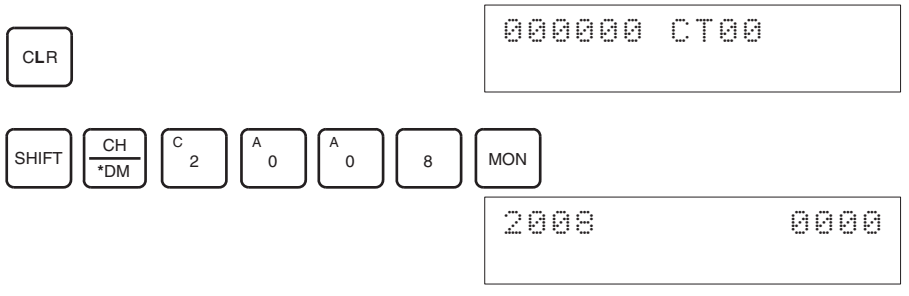

4. Change the set value so that the output voltage is as shown in the following table. The data can be set within the indicated ranges.

Output signal range	Possible output voltage/current adjustment	Output range
0 to 10 V	9.5 to 10.5 V	0ED8 to 1068 (1DB0 to 20D0)
–10 to 10 V	9 to 11 V	0708 to 0898 (0E10 to 1130)
1 to 5 V	4.8 to 5.2 V	0ED8 to 1068 (1DB0 to 20D0)
0 to 5 V	4.75 to 5.25 V	0ED8 to 1068 (1DB0 to 20D0)
4 to 20 mA	19.2 to 20.8 mA	0ED8 to 1068 (1DB0 to 20D0)

(Values in parentheses are for a resolution of 8,000.)

Change the set value, using the Up Bit (bit 03 of word n+1) and the Down Bit (bit 02 of word n+1).

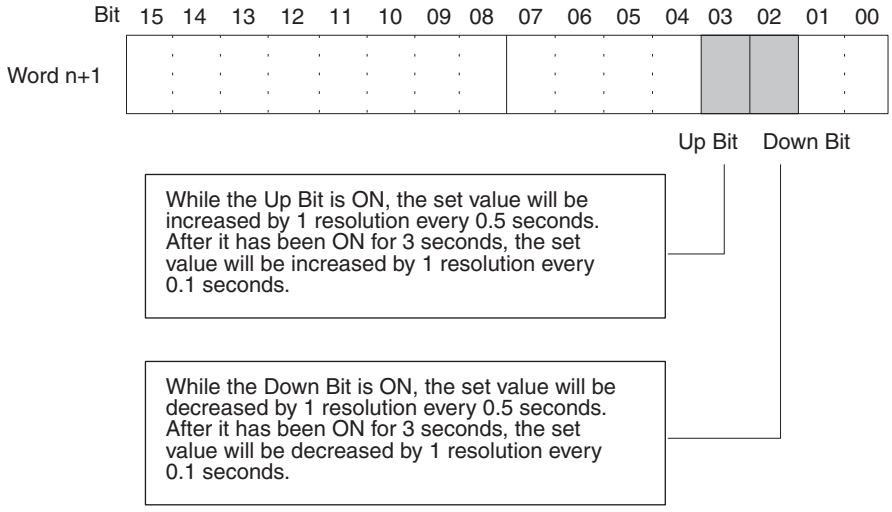

- The following example increases the output voltage.

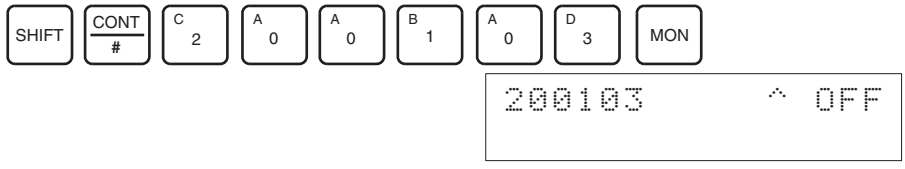

The bit will remain ON until the output voltage becomes an appropriate value, at which time, the output will turn OFF.

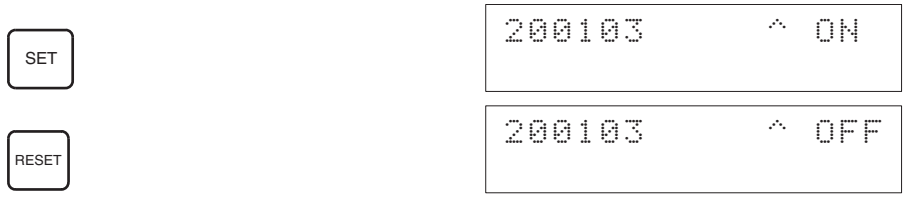

- The following example decreases the output voltage.

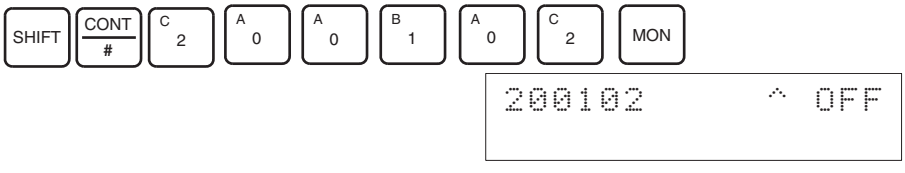

The bit will remain ON until the output voltage becomes an appropriate value, at which time, the output will turn OFF.

SET

```
200102      ^ ON
```

RESET

```
200102      ^ OFF
```

5. Check the 10V/5V/20 mA output, and then turn bit 04 (the Set Bit) of CIO word n+1 ON and then OFF again.

SHIFT CONT # C 2 A 0 A 0 B 1 A 0 E 4 MON

```
200104      ^ OFF
```

SET

```
200104      ^ ON
```

RESET

```
210104      ^ OFF
```

While the Gain Bit is ON, the gain value will be saved to the Unit's EEPROM when the Set Bit turns ON.

6. To finish the gain adjustment, turn OFF bit 01 (the Gain Bit) of CIO word n+1.

SHIFT CONT # C 2 A 0 A 0 B 1 A 0 B 1 MON

```
200101      ^ ON
```

RESET

```
200101      ^ OFF
```

⚠ **Caution** Do not turn OFF the power supply or restart the Unit while the Set Bit is ON (data is being written to the EEPROM). Otherwise, illegal data may be written in the Unit's EEPROM and "EEPROM Errors" may occur when the power supply is turned ON or when the Unit is restarted, causing a malfunction.

⚠ **Caution** When making adjustments, be sure to perform both the offset adjustment and gain adjustment at the same time.

Note The EEPROM can be overwritten 50,000 times.

Clearing Offset and Gain Adjusted Values

Follow the procedure outlined below to return the offset and gain adjusted values to their default settings.

The following example uses output number 1 adjustment for illustration. (The unit number is 0.)

1,2,3...

1. Turn ON bit 05 (the Clear Bit) of CIO word n+1. (Hold the ON status.) Regardless of the set value, 0000 will be monitored in CIO word n+8.

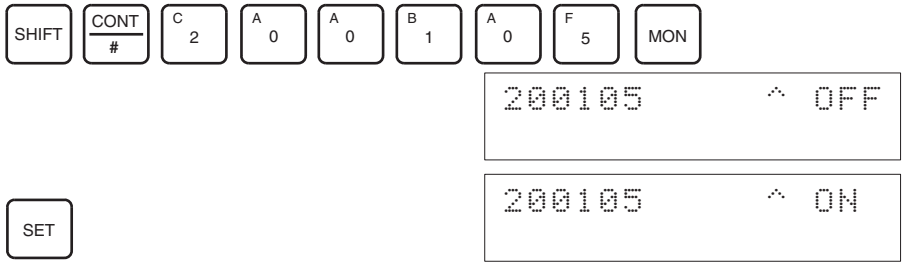

2. Turn bit 04 of CIO word n+1 ON and then OFF again.

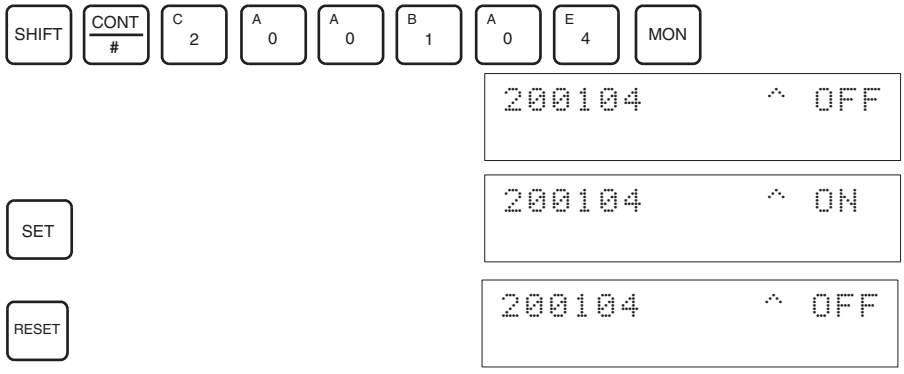

While the Clear Bit is ON, the adjusted value will be cleared and reset to the default offset and gain values when the Set Bit turns ON.

3. To finish the clearing of adjusted values, turn OFF bit 05 (the Clear Bit) of CIO word n+1.

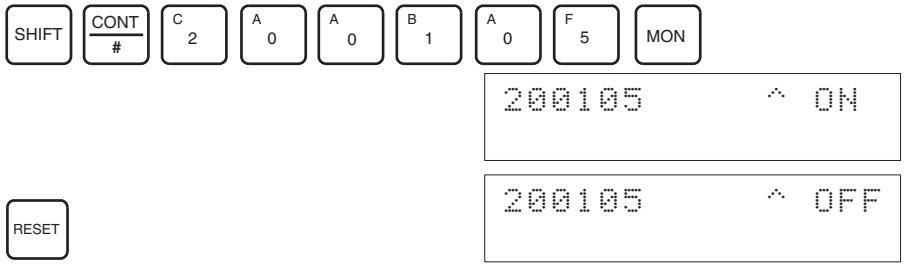

⚠ **Caution** Do not turn OFF the power supply or restart the Unit while the Set Bit is ON (data is being written to the EEPROM). Otherwise, illegal data may be written in the Unit's EEPROM and "EEPROM Errors" may occur when the power supply is turned ON or when the Unit is restarted, causing a malfunction.

Note The EEPROM can be overwritten 50,000 times.

6-8 Handling Errors and Alarms

6-8-1 Indicators and Error Flowchart

Indicators

If an alarm or error occurs in the Analog Output Unit, the ERC or ERH indicators on the front panel of the Unit will light.

Front panel of Unit

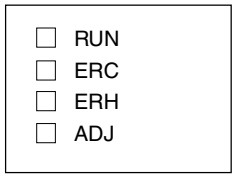

LED	Meaning	Indicator	Operating status
RUN (green)	Operating	Lit	Operating in normal mode.
		Not lit	Unit has stopped exchanging data with the CPU Unit.
ERC (red)	Error detected by Unit	Lit	Alarm has occurred or initial settings are incorrect.
		Not lit	Operating normally.
ERH (red)	Error in the CPU Unit	Lit	Error has occurred during data exchange with the CPU Unit.
		Not lit	Operating normally.
ADJ (yellow)	Adjusting	Flashing	Operating in offset/gain adjustment mode.
		Not lit	Other than the above.

Troubleshooting Procedure

Use the following procedure for troubleshooting Analog Output Unit errors.

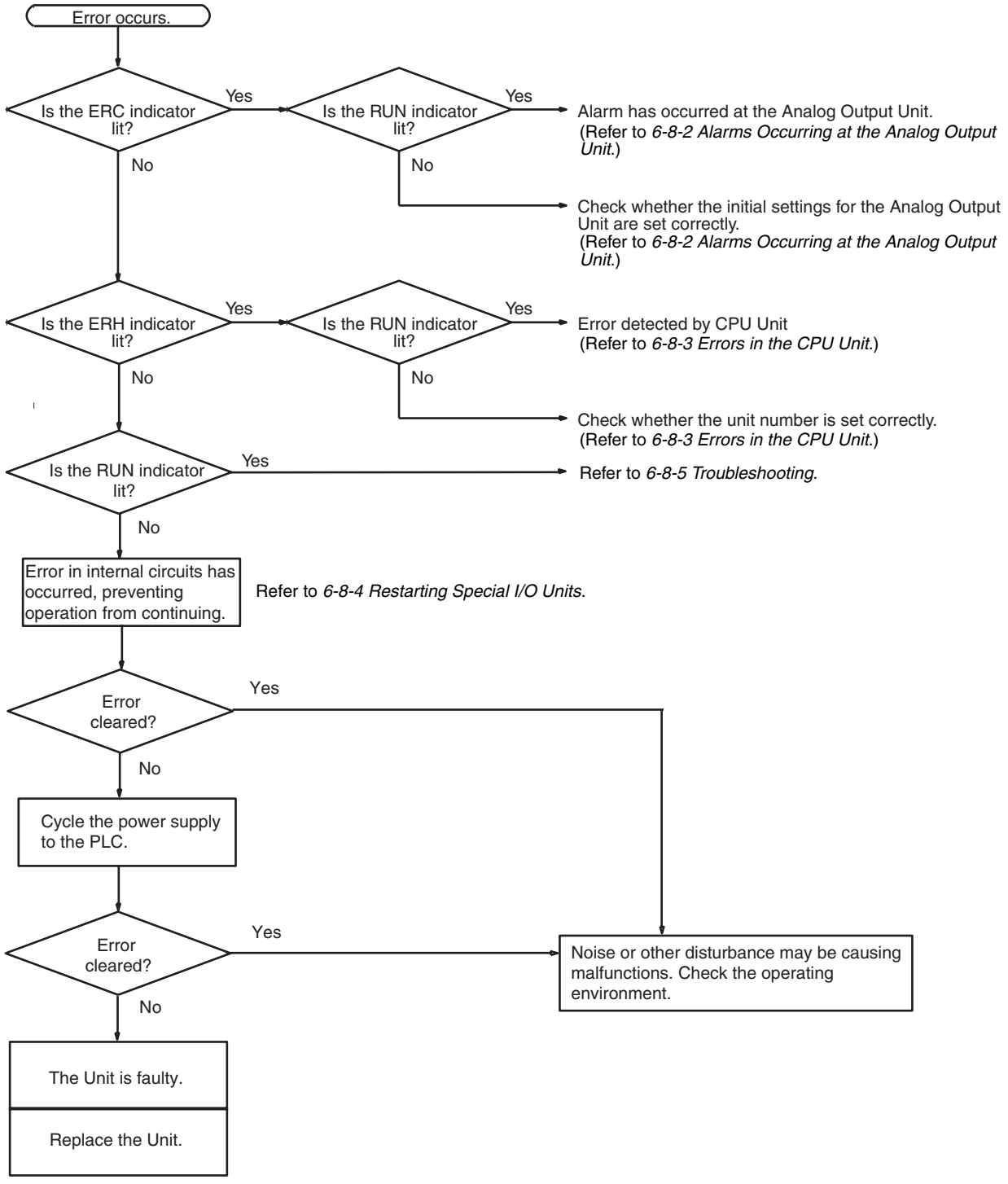

6-8-2 Alarms Occurring at the Analog Output Unit

The ERC indicator will light when the Analog Output Unit detects an alarm. The Alarm Flags in bits 08 to 15 of CIO word n+9 will turn ON.

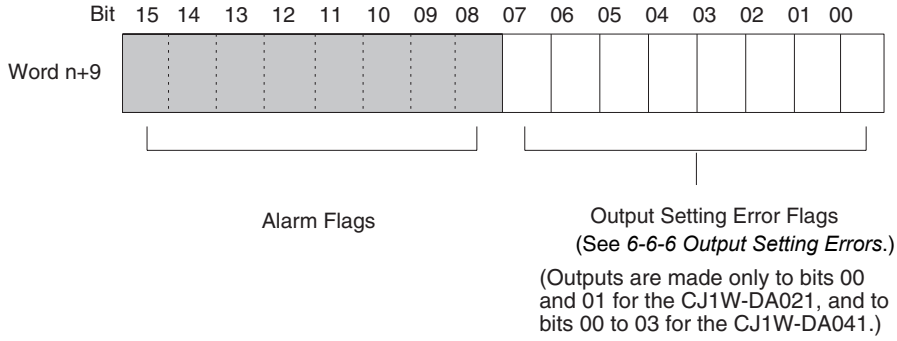

For the CIO word addresses, n = CIO 2000 + (unit number × 10).

ERC and RUN Indicators: Lit

The ERC and RUN indicators will be lit if an error occurs while the Unit is operating normally. The following alarm flags will turn ON in CIO word n+9. These alarm flags will turn OFF automatically when the error is cleared.

Word n + 9	Alarm flag	Error contents	Output status	Countermeasure
Bits 00 to 07 (See note 2.)	Output Set Value Error	The output setting range has been exceeded.	Output value set by output hold function.	Correct the set value.
Bit 14	(Adjustment mode) EEPROM Writing Error	An EEPROM writing error has occurred while in adjustment mode.	Holds the output status immediately prior to the error.	Turn the Set Bit OFF, ON, and OFF again. If the error persists even after the reset, replace the Analog Output Unit.

Note
1. n = CIO 2000 + (unit number × 10)
2. Only bits 00 and 01 are used for the CJ1W-DA021 and only bits 00 to 03 are used for the CJ1-DA041.

ERC Indicator and RUN Indicator: Lit, ADJ Indicator: Flashing

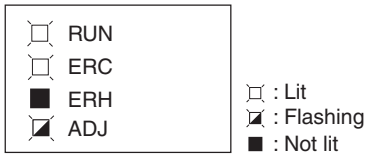

This alarm will occur in the case of incorrect operation while in the adjustment mode. In adjustment mode, the Adjustment Mode ON Flag will turn ON in bit 15 of CIO word n+9.

Word n + 9	Alarm flag	Error contents	Output status	Countermeasure
Bit 13	(Adjustment mode) Output Number Setting Error	In adjustment mode, adjustment cannot be performed because the specified output number is not set for use or because the wrong output number is specified.	The output voltage or current becomes 0 V or 0 mA.	Check whether the word n output number to be adjusted is set from 11 to 14. Check whether the output number to be adjusted is set for use by means of the DM setting.
Bit 15 only ON	(Adjustment Mode) PLC Error	The PLC is in either MONITOR or RUN mode while the Analog Output Unit is operating in adjustment mode.	The output voltage or current becomes 0 V or 0 mA.	For the CJ1W-DA021 or CJ1W-DA041, set the operation mode to normal mode and restart. For the CJ1W-DA08V/08C, set bits 00 to 07 of D(m+18) to 00 hex. Then either power up again or turn the Special I/O Unit Restart Bit ON and then OFF again.

Note When a PLC error occurs in the adjustment mode, Unit operations will stop operating. (The input and output values immediately prior to the error will be held.)

ERC Indicator: Lit, RUN Indicator: Not Lit

The ERC indicator will be lit when the initial settings for the Analog Output Unit are not set correctly. The alarm flags for the following errors will turn ON in CIO word n+9. These alarm flags will turn OFF when the error is cleared and the power to the PLC is cycled, or the Special I/O Unit Restart Bit is turned ON and then OFF again.

Word n + 9	Alarm flag	Error contents	Countermeasure
Bit 08	Scaling Data Setting Error	There is a mistake in the upper or lower limit setting when scaling is used. The setting range has been exceeded. The upper limit equals the lower limit (not 0000).	Correct the settings.
Bit 10	Output Hold Setting Error	The settings of the output status for when conversion is stopped is wrong.	Specify a number from 0000 to 0002.
Bit 12	Conversion Time/Resolution, Operation Mode Setting Error	The conversion time/resolution setting or operation mode setting is incorrect.	Set 00 hex or 01 hex.

Note Bit 15 is normally turned OFF (i.e., set to 0).

6-8-3 Errors in the CPU Unit

The ERH indicator will light if an error occurs in the CPU Unit or I/O bus and I/O refreshing with the Special I/O Units is not performed correctly, preventing the Analog Output Unit from operating.

ERH and RUN Indicators: Lit

The ERH and RUN indicators will light if an error occurs in the I/O bus causing a WDT (watchdog timer) error in the CPU Unit, resulting in incorrect I/O refresh with the Analog Output Unit.

Turn ON the power supply again or restart the system.
For further details, refer to *CJ-series CJ1G-CPU□□, CJ1G/H CPU□□H Programmable Controllers Operation Manual* (W393).

Error	Error contents	Output condition
I/O bus error	Error has occurred during data exchange with the CPU Unit.	Output value set by output hold function.
CPU Unit monitoring error (see note)	No response from CPU Unit for specified period of time.	Maintains the status from before the error.
CPU Unit WDT error	Error has been generated in CPU Unit.	Output value set by output hold function.

Note No error will be detected by the CPU Unit or displayed on the Programming Console, because the CPU Unit is continuing operation.

ERH Indicator: Lit, RUN Indicator: Not Lit

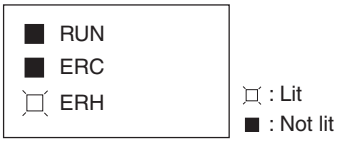

The unit number for the Analog Output Unit has not been set correctly.

Error	Error contents	Output condition
Duplicate Unit Number	The same unit number has been assigned to more than one Unit or the unit number was set to a value other than 00 to 95.	The output value will be 0 V.
Special I/O Unit Setting Error	The Special I/O Units registered in the I/O table are different from the ones actually mounted.	

6-8-4 Restarting Special I/O Units

To restart the Analog Output Unit after changing the contents of the DM Area or correcting an error, cycle the power to the PLC or turn ON the Special I/O Unit Restart Bit.

Special I/O Unit Restart Bits

Bit	Function	
A50200	Unit #0 Restart Bit	Turning the Restart Bit for any Unit ON and then OFF again restarts that Unit.
A50201	Unit #1 Restart Bit	
to	to	
A50215	Unit #15 Restart Bit	
A50300	Unit #16 Restart Bit	
to	to	
A50715	Unit #95 Restart Bit	

The output becomes 0 V or 0 mA during restart.

Replace the Unit if the error is not cleared even though the power supply is cycled or the Restart Bit is turned ON.

6-8-5 Troubleshooting

The following tables list the probable causes of troubles that may occur, and the countermeasures for dealing with them.

Analog Output Does Not Change

Probable Cause	Countermeasure	Page
The output is not set for being used.	Set the output for being used.	244
The output hold function is in operation.	Turn ON the Output Conversion Enable Bit.	248
The conversion value is set outside of the permissible range.	Set the data within the range.	220

Value Does Not Change as Intended

Probable Cause	Countermeasure	Page
The output signal range setting is wrong.	Correct the output signal range setting.	245
The specifications of the output device do not match those of the Analog Output Unit (e.g., input signal range, input impedance).	Change the output device.	219
The offset or gain is not adjusted.	Adjust the offset or gain.	252

Outputs Are Inconsistent

Probable Cause	Countermeasure	Page
The output signals are being affected by external noise.	Try changing the shielded cable connection (e.g., the grounding at the output device).	235

SECTION 7
CJ-series Analog Output Unit (CJ1W-DA042V)

This section explains how to use the CJ1W-DA042V Analog Output Units.

7-1 Specifications 270
7-1-1 Specifications 270
7-1-2 Output Function Block Diagram 271
7-1-3 Output Specifications 272
7-2 Operating Procedure 274
7-3 Components and Switch Settings 278
7-3-1 Component Names 278
7-3-2 Indicators 279
7-3-3 Unit Number Switches 279
7-4 Wiring 280
7-4-1 Terminal Arrangement 280
7-4-2 Internal Circuitry 280
7-4-3 Output Wiring Example 281
7-4-4 Output Wiring Considerations 282
7-5 Exchanging Data with the CPU Unit 283
7-5-1 Outline of Data Exchange. 283
7-5-2 Allocations for Initial Settings Data 285
7-5-3 I/O Refresh Data Allocations 287
7-6 Analog Output Functions and Operating Procedures 289
7-6-1 Output Settings and Conversion Values 289
7-6-2 Conversion Mode Setting 291
7-6-3 Output Hold Function. 292
7-6-4 Output Scaling 293
7-6-5 Output Setting Errors 295
7-7 Handling Errors and Alarms 296
7-7-1 Indicators and Error Flowchart. 296
7-7-2 Alarms Occurring at the Analog Output Unit. 298
7-7-3 Errors in the CPU Unit 299
7-7-4 Restarting Special I/O Units. 300
7-7-5 Troubleshooting 300

7-1 Specifications

7-1-1 Specifications

Unit model			**CJ1W-DA042V**	
Unit type			CJ-series Special I/O Unit	
Isolation			Between outputs and PLC signals: Digital isolator (No isolation between output signals.) (See note 1.)	
External terminals			18-point detachable terminal block (M3 screws)	
Affect on CPU Unit cycle time			CJ2H CPU Unit	0.05 ms
			CJ2M/CJ3M CPU Unit	0.07 ms
			CJ1 CPU Unit	0.2 ms
Current consumption			400 mA max. at 5 VDC	
Dimensions (mm) (See note 2.)			31 × 90 × 65 (W × H × D)	
Weight			150 g max.	
General specifications			Conforms to general specifications for SYSMAC CJ-series Series.	
Mounting position			CJ-series CPU Rack or CJ-series Expansion Rack	
Maximum number of Units			Per CPU Rack or Expansion Rack (See note 3.)	Power Supply Unit / No. of mountable Units
				CJ1W-PA205R CJ1W-PA205C CJ1W-PD025 / CPU Rack: 10 Units/Rack Expansion Rack: 10 Units/Rack
				CJ1W-PA202 / CPU Rack: 5 Units/Rack Expansion Rack: 6 Units/Rack
				CJ1W-PD022 / CPU Rack: 3 Units/Rack Expansion Rack: 4 Units/Rack
Data exchange with the CPU Unit (See note 4.)			Special I/O Unit Area in CIO Area (CIO 2000 to CIO 2959): 10 words/Unit Special I/O Unit Area in DM Area (D20000 to D29599): 100 words/Unit	
Output specifications	Number of analog outputs		4	
	Output signal range (See note 5.)		1 to 5 V 0 to 10 V −10 to 10 V	
	Output impedance		0.5 Ω max.	
	Maximum permissible load resistance		5 kΩ min. (per output)	
	Resolution		1 to 5 V	1/10,000 (full scale)
			0 to 10 V	1/20,000(full scale)
			−10 to 10 V	1/40,000(full scale)
	Set data		16-bit binary data	
	Accuracy	25°C	±0.3% (full scale)	
		0 to 55°C	±0.5% (full scale)	
	Conversion period (See note 6.)		20 μs for 1 point, 25 μs for 2 points, 30 μs for 3 points, 35 μs for 4 points	
Output functions	Output hold function		Outputs the specified output status (CLR, HOLD, or MAX) under any of the following circumstances. • When the Conversion Enable Bit is OFF. (See note 7.) • When there is an output setting error or a fatal error occurs at the PLC. • When all loads are turned OFF.	
	Scaling		Setting values in any specified unit within a range of ±32,000 as the upper and lower limits allows D/A conversion to be executed and analog signals to be output with these values as full scale.	
	Direct conversion		The output set value refreshed and D/A conversion is performed immediately when the ANALOG OUTPUT DIRECT CONVERSION (AODC) instruction is executed. A CJ2H-CPU□□(-EIP) CPU Unit with unit version 1.1 or later and CJ2M/CJ3M-CPU□□ are required to use direct conversion.	

Note 1. Do not apply a voltage higher than 600 V to the terminal block when per-

forming withstand voltage test on this Unit. Otherwise, internal elements may deteriorate.

2. Refer to page 441 for Unit dimensions.
3. This is the maximum number of Units that can be mounted to a CJ2H-CPU6□ CPU Unit (no EtherNet/IP). The maximum number of Analog Output Units that can be mounted to one Rack varies depending on the current consumption of the other Units mounted to the Rack.
4. Data exchange methods with the CPU Unit are as follows:

Special I/O Unit Area in CIO Area CIO 2000 to CIO 2959 (2000.00 to 2959.15)	10 words transferred per Unit	CPU Unit to Analog Output Unit	• Set value • Conversion enable bits
		Analog Output Unit to CPU Unit	• Alarm Flags
Special I/O Unit Area in DM Area (D20000 to D29599)	100 words per Unit refreshed at power ON and restarts	CPU Unit to Analog Output Unit	• Number of analog outputs used • Conversion mode setting • Output signal range setting • Output status when conversion stops • Scaling lower and upper limits

5. Output signal range can be set for each output.
6. D/A conversion time is the time required for converting and outputting the PLC data. With direct conversion, data can be exchanged with the PLC and D/A conversion can be performed within the processing time of the ANALOG OUTPUT DIRECTION CONVERSION (AODC) instruction. It takes at least one cycle for the data stored in the PLC to be transferred to the Analog Output Unit in Cyclic Conversion Mode.
7. When the operation mode for the CPU Unit is changed from RUN mode or MONITOR mode to PROGRAM mode, or when the power is turned ON, the Output Conversion Enable Bit will turn OFF. The output status specified for the output hold function will be output. In Direct Conversion Mode, the set value specified with the ANALOG OUTPUT DIRECT CONVERSIONS (AODC) instruction will be output in RUN or MONITOR mode even if the Output Conversion Enable Bit is OFF.

7-1-2 Output Function Block Diagram

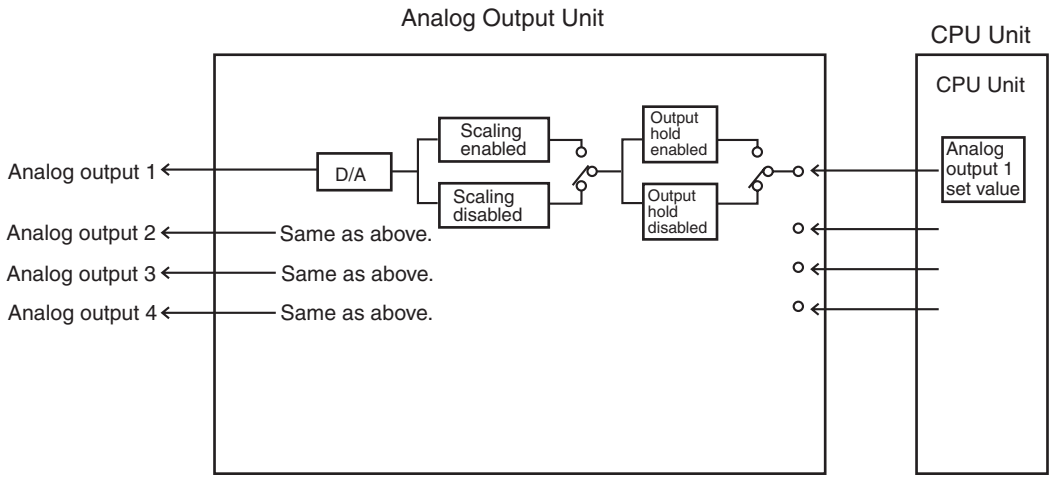

7-1-3 Output Specifications

If the set value is outside the specified range given below, an output setting error will occur, and the output specified by the output hold function will be output.

Range: 1 to 5 V

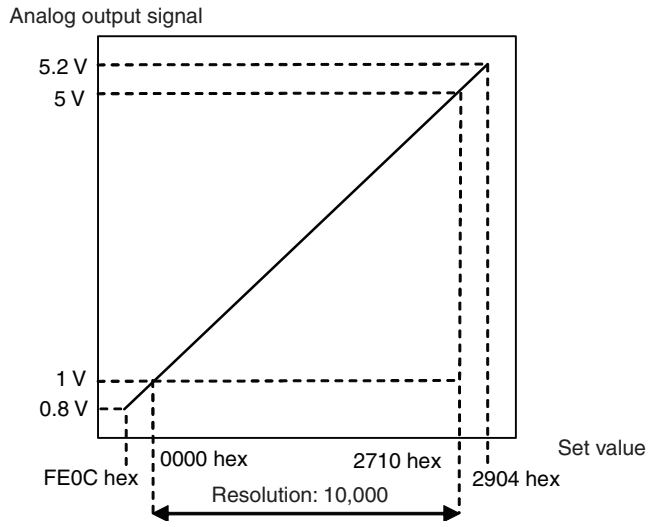

Range: 0 to 10 V

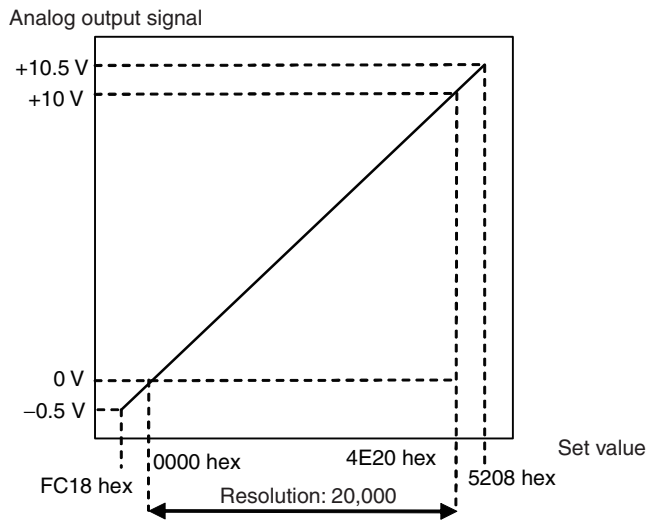

Range: –10 to 10 V

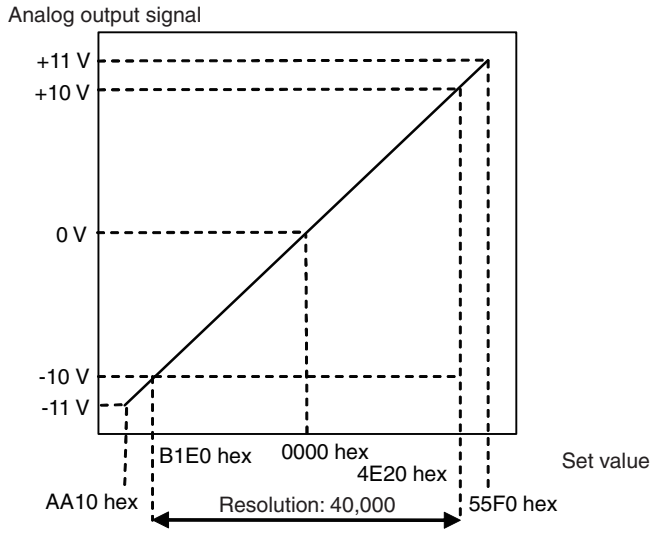

Note The conversion values for a range of –10 to 10 V will be as follows (for a resolution of 40,000):

16-bit binary data	BCD
AA10	–22,000
:	:
FFFF	–1
0000	0
0001	1
:	:
55F0	22,000

7-2 Operating Procedure

Follow the procedures outlined below when using the Analog Output Unit.

Installation and Settings

1,2,3...

1. Use the unit number switches on the front panel of the Unit to set the unit number.
2. Wire the Unit.
3. Turn ON the power to the PLC.
4. Create the I/O tables.
5. Make the Special I/O Unit settings in the DM Area.
   - Set the number of analog outputs to be used.
   - Set the conversion mode.
   - Set the output signal ranges.
   - Set the output hold function.
   - Set upper and lower limits for scaling.
6. Turn the power to the PLC OFF and ON, or turn ON the Special I/O Unit Restart Bit.

Operation

1,2,3...

1. Ladder program
   - Write set values by means of MOV(021) and XFER(070).
   - Start and stop conversion outputs.
   - Obtain error flags.

Procedure Example

An example application procedure is given below.

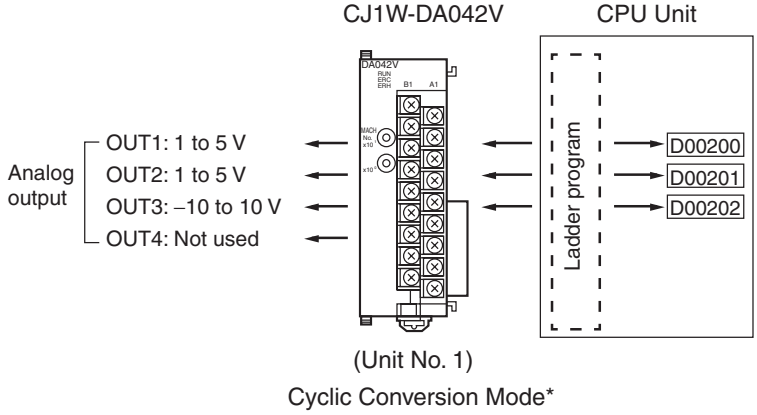

* In Cyclic Conversion Mode, D/A conversion is performed once each conversion cycle, the same way as it is for the CJ1W-DA021/-DA041/-DA08V/-DA08C.

Setting the Analog Output Unit

1,2,3... 1. Set the unit number switches. (Refer to page 277.)

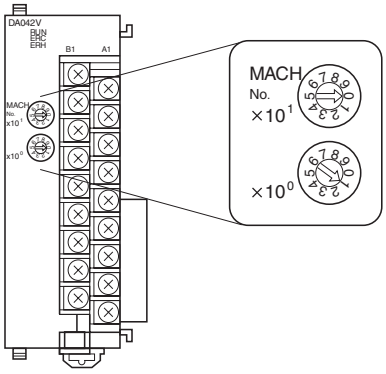

If the unit number is set to 1, words CIO 2010 to CIO 2019 in the Special I/O Unit Area in the CIO Area and words D20100 to D20199 in the Special I/O Unit Area in the DM Area will be allocated to the Analog Output Unit.

2. Connect and wire the Analog Output Unit. (Refer to pages 12, 280, and 281.)

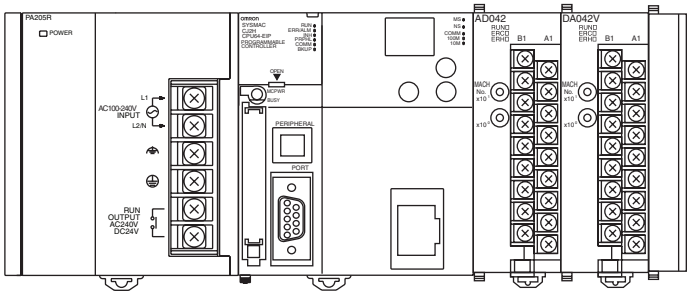

3. Turn ON the power to the PLC.

Creating I/O Tables

After turning ON the power to the PLC, be sure to create the I/O tables.

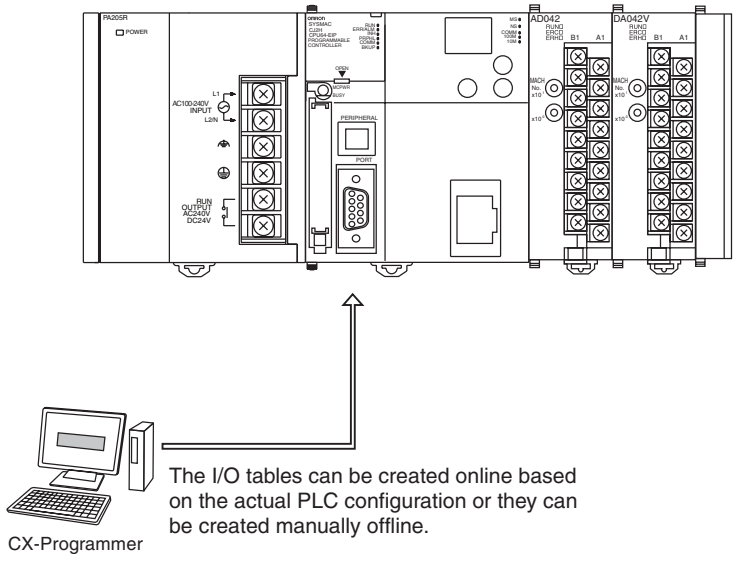

The I/O tables can be created online based on the actual PLC configuration or they can be created manually offline.

Initial Data Settings

1,2,3... 1. Specify the Special I/O Unit settings in the DM Area. (Refer to page 285.)

Setting Examples

- Unit number: 1
- Cyclic Conversion Mode
- Analog output 1: 1 to 5 V
  Analog output 2: 1 to 5 V
  Analog output 3: –10 to –10 V
  Analog output 4: Not used.

a) Set the number of analog outputs to use. (Refer to page 289.)

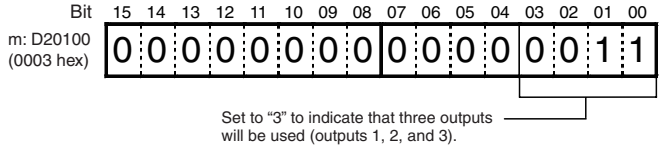

b) Set the conversion mode. (Refer to page 291.)

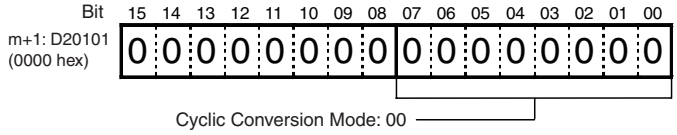

c) Output Signal Range Settings (Refer to page 289.)

1. Output Signal Range Setting for Output 1

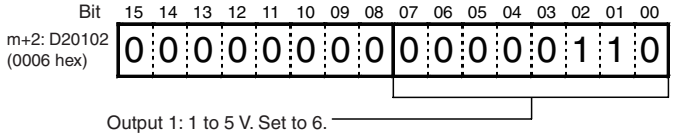

2. Output Signal Range Setting for Output 2

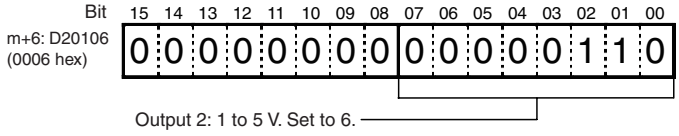

3. Output Signal Range Setting for Output 3

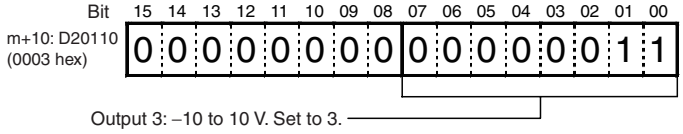

2. Cycle the power to the PLC.

Creating Ladder Programs

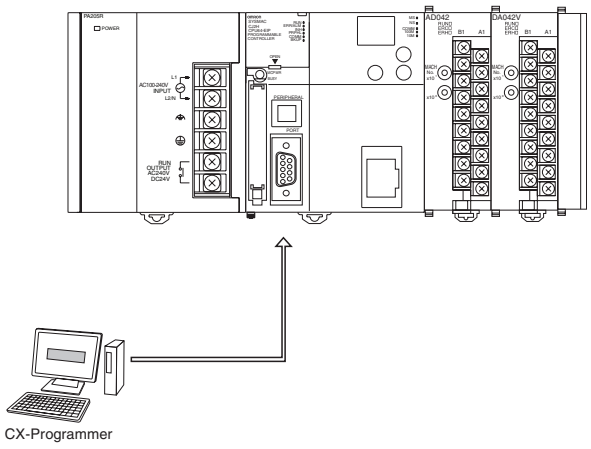

The contents of the specified address, D00200, is stored in words (n + 1) to (n + 3) of the Special I/O Unit Area (CIO 2011 to CIO 2013) as a signed binary value.

■ Analog Outputs

Output number	Output signal range	Address of output set value (n = CIO 2010) (See note 1.)	Conversion source address (See note 2.)
1	1 to 5 V	n+1 = CIO 2011	D00200
2	1 to 5 V	n+2 = CIO 2012	D00201
3	–10 to 10 V	n+3 = CIO 2013	D00202
4	Not used.	---	---

Note 1. The addresses are determined by the unit number of the Special I/O Unit. (Refer to page 279.)

2. Set as required.

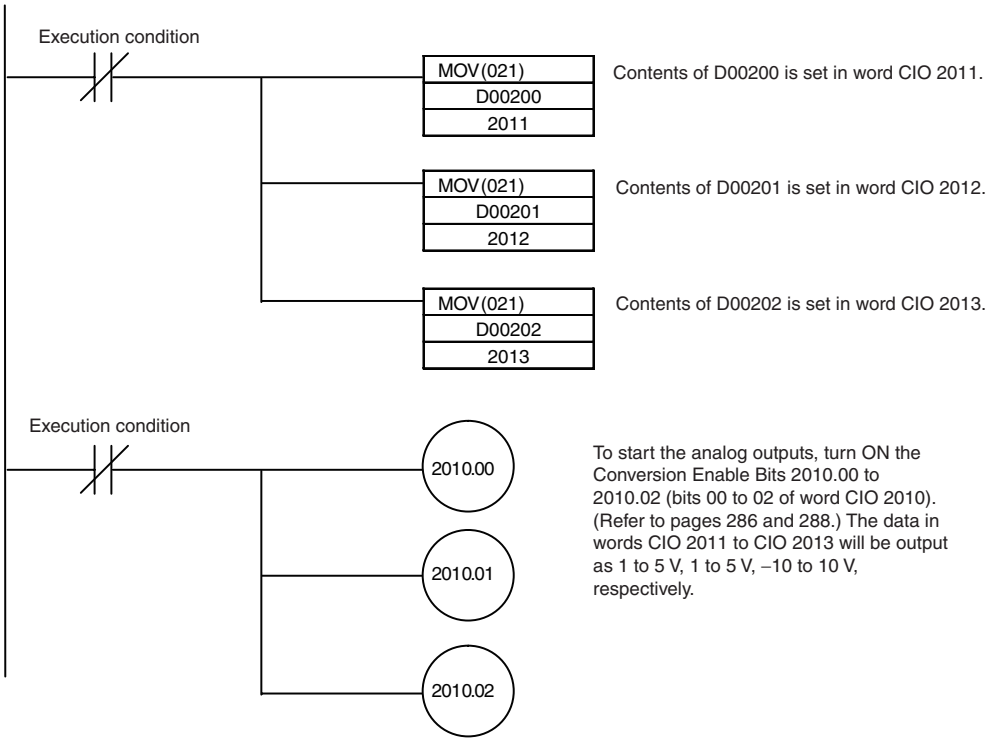

7-3 Components and Switch Settings

7-3-1 Component Names

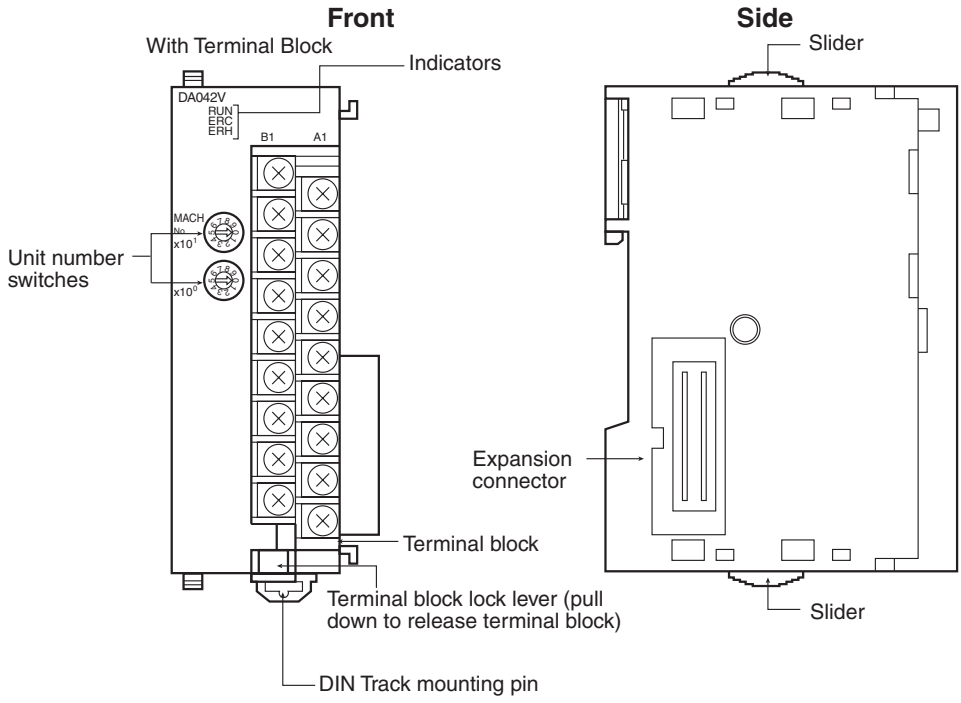

Note 1. The terminal block is attached using a connector. It can be removed by lowering the lever at the bottom of the terminal block.

2. The lever must normally be in the raised position. Confirm this before operation.

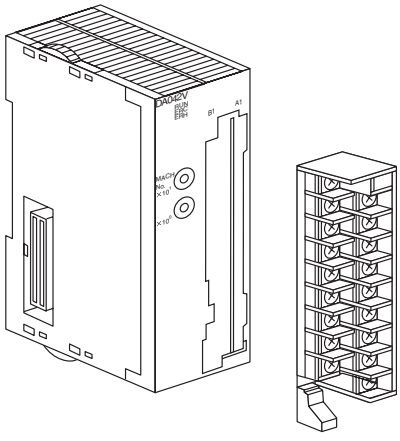

7-3-2 Indicators

The indicators show the operating status of the Unit. The following table shows the meanings of the indicators.

Indicator	Meaning	Indicator status	Operating status
RUN (green)	Operating	Lit	Operation normal.
		Not lit	Unit has stopped exchanging data with the CPU Unit.
ERC (red)	Error detected by Unit	Lit	Initial settings are incorrect.
		Not lit	Operating normally.
ERH (red)	Errors in the CPU Unit	Lit	Error has occurred during data exchange with the CPU Unit.
		Not lit	Operating normally.

7-3-3 Unit Number Switches

The CPU Unit and Analog Output Unit exchange data via the Special I/O Unit Areas in the CIO Area and DM Area. The words that are allocated to each Analog Output Unit in the Special I/O Unit Areas in the CIO Area and DM Area are determined by the setting of the unit number switches on the front panel of the Unit.

Unit number switches

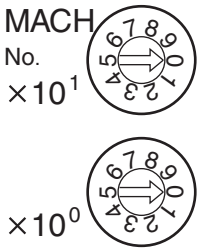

Switch setting	Unit number	Words allocated in Special I/O Unit Area in CIO Area	Words allocated in Special I/O Unit Area in DM Area
0	0	CIO 2000 to CIO 2009	D20000 to D20099
1	1	CIO 2010 to CIO 2019	D20100 to D20199
2	2	CIO 2020 to CIO 2029	D20200 to D20299
3	3	CIO 2030 to CIO 2039	D20300 to D20399
4	4	CIO 2040 to CIO 2049	D20400 to D20499
5	5	CIO 2050 to CIO 2059	D20500 to D20599
6	6	CIO 2060 to CIO 2069	D20600 to D20699
7	7	CIO 2070 to CIO 2079	D20700 to D20799
8	8	CIO 2080 to CIO 2089	D20800 to D20899
9	9	CIO 2090 to CIO 2099	D20900 to D20999
10	10	CIO 2100 to CIO 2109	D21000 to D21099
to	to	to	to
n	n	CIO 2000 + (n × 10) to CIO 2000 + (n × 10) + 9	D20000 + (n × 100) to D20000 + (n × 100) + 99
to	to	to	to
95	95	CIO 2950 to CIO 2959	D29500 to D29599

Note If two or more Special I/O Units are assigned the same unit number, a Unit Number Duplication Error will occur (A401.13 will turn ON) and the PLC will not operate.

7-4 Wiring

⚠ **Caution** Always connect surge suppressors to inductive loads in the system (e.g., magnetic contactors, relays, and solenoids). Always separate devices that generate surge from the Analog I/O Units. Faulty Unit operation may cause unexpected system operation.

If inductive loads are connected to output signals from Relay Contact Output Units, connect a surge suppressor in an AC circuit and a diode in a DC circuit close to the inductive load to absorb the back electromotive force.

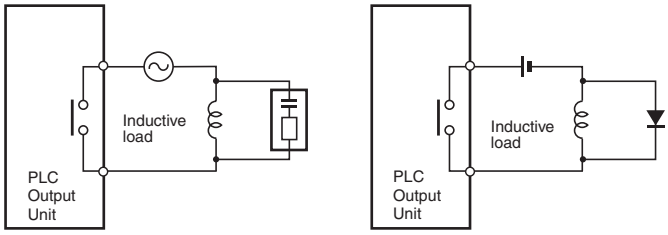

Connect a surge suppressor in an AC circuit and a diode in a DC circuit.

7-4-1 Terminal Arrangement

The signal names corresponding to the connecting terminals are as shown in the following diagram.

Output 2 (+)	B1	A1	Output 1 (+)
Output 2 (–)	B2	A2	Output 1 (–)
N.C.	B3	A3	N.C.
Output 4 (+)	B4	A4	Output 3 (+)
Output 4 (–)	B5	A5	Output 3 (–)
N.C.	B6	A6	N.C.
N.C.	B7	A7	N.C.
N.C.	B8	A8	N.C.
N.C.	B9	A9	N.C.

Note
1. The number of analog outputs that can be used is set in the DM Area.
2. The output signal ranges for individual outputs are set in the DM Area. The output signal range can be set separately for each output.
3. Do not make any connections to the N.C. terminals.

7-4-2 Internal Circuitry

The following diagrams show the internal circuitry of the analog output section.

Output circuits

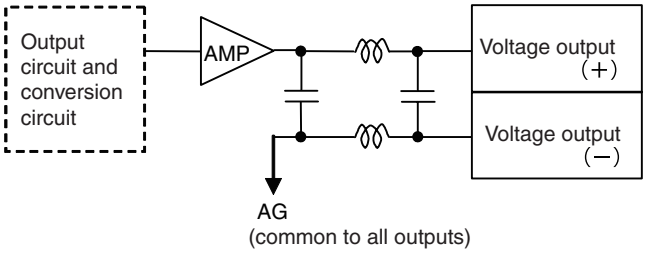

Internal Configuration

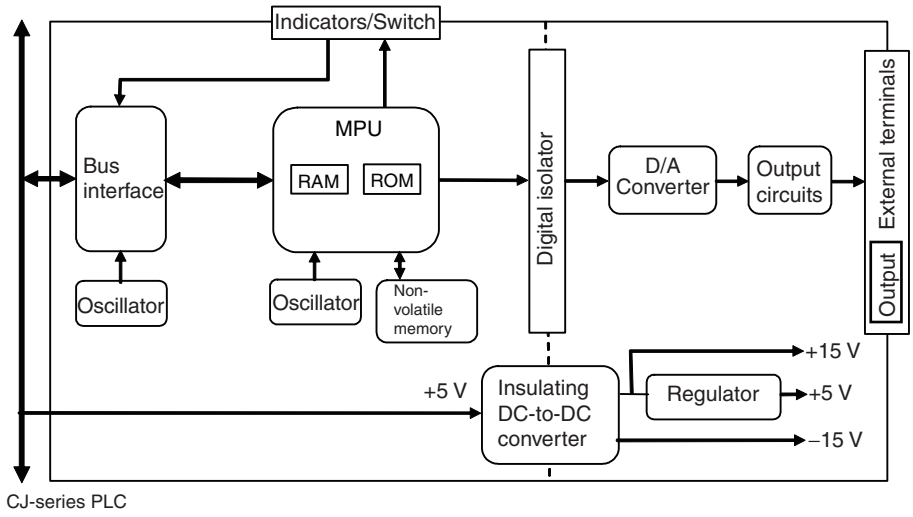

7-4-3 Output Wiring Example

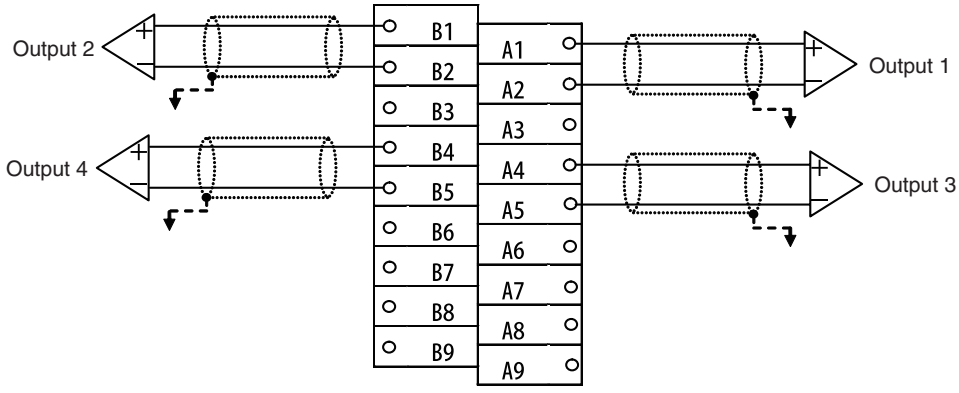

Note Crimp terminals must be used for terminal connections, and the screws must be tightened securely. M3 terminal screws are used. The applicable tightening torque is 0.5 N·m.

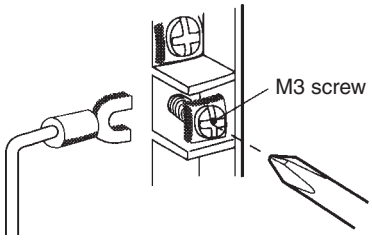

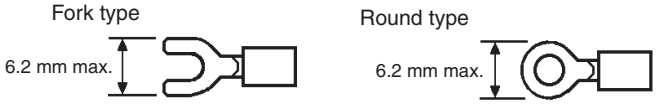

Note To increase noise resistance for analog output wiring, ground the shield on the output signal cable at the output device.

7-4-4 Output Wiring Considerations

When wiring outputs, apply the following points to avoid noise interference and optimize Analog Output Unit performance.

- Use two-core shielded twisted-pair cables for output connections.
- Route output cables separately from power cables (e.g., AC and three-phase lines), and do not place them in the same duct with power cables.
- If there is noise interference from power lines (if, for example, the power supply is shared with electrical welding devices or electrical discharge machines, or if there is a high-frequency generation source nearby), install a noise filter at the power supply input area.

7-5 Exchanging Data with the CPU Unit

7-5-1 Outline of Data Exchange

Data is exchanged between the CPU Unit and the CJ1W-DA042V Analog Output Unit via the Special I/O Unit Area in the CIO Area (for data used to operate the Unit) and the Special I/O Unit Area in the DM Area (for data used for initial settings).

■ I/O Refresh Data

Analog output set values, which are used as data for Unit operation, are allocated in the Special I/O Unit Area in the CIO Area of the CPU Unit according to the unit number. These values are updated during I/O refreshing.

■ Initial Settings Data

The Unit's initial settings data, such as the analog output signal ranges and the output status when conversion stops, is allocated in the Special I/O Unit Area in the DM Area of the CPU Unit according to the unit number, and is exchanged when the power is turned ON or the Unit is restarted.

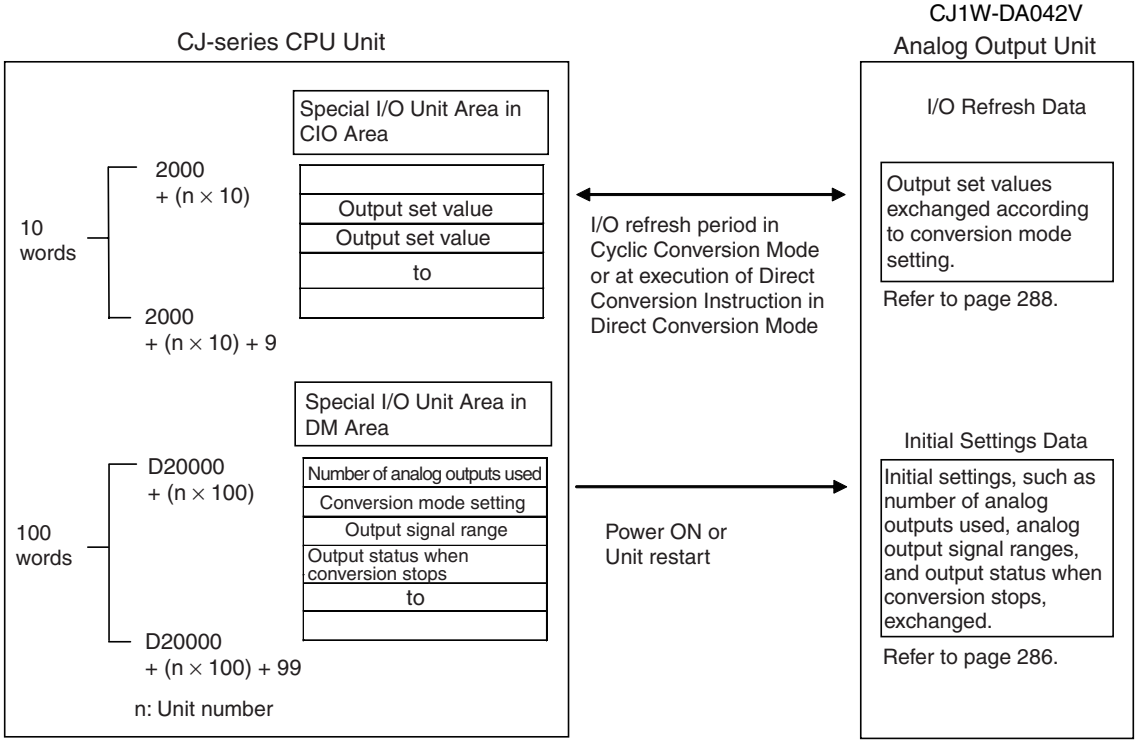

Unit Number Setting

The words in the Special I/O Unit Areas in the CIO Area and DM Area that are allocated to each Analog Output Unit are determined by the setting of the unit number switches on the front panel of the Unit.

Unit number switches

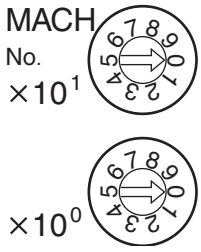

Switch setting	Unit number	Words allocated in Special I/O Unit Area in CIO Area	Words allocated in Special I/O Unit Area in DM Area
0	0	CIO 2000 to CIO 2009	D20000 to D20099
1	1	CIO 2010 to CIO 2019	D20100 to D20199
2	2	CIO 2020 to CIO 2029	D20200 to D20299
3	3	CIO 2030 to CIO 2039	D20300 to D20399
4	4	CIO 2040 to CIO 2049	D20400 to D20499
5	5	CIO 2050 to CIO 2059	D20500 to D20599
6	6	CIO 2060 to CIO 2069	D20600 to D20699
7	7	CIO 2070 to CIO 2079	D20700 to D20799
8	8	CIO 2080 to CIO 2089	D20800 to D20899
9	9	CIO 2090 to CIO 2099	D20900 to D20999
10	10	CIO 2100 to CIO 2109	D21000 to D21099
to	to	to	to
n	n	CIO 2000 + (n × 10) to CIO 2000 + (n × 10) + 9	D20000 + (n × 100) to D20000 + (n × 100) + 99
to	to	to	to
95	95	CIO 2950 to CIO 2959	D29500 to D29599

Note If two or more Special I/O Units are assigned the same unit number, a Unit Number Duplication Error will occur (A401.13 will turn ON) and the PLC will not operate.

Special I/O Unit Restart Bits

To restart the Analog Output Unit after changing the contents of the DM Area or correcting an error, cycle the power to the PLC or turn ON the Special I/O Unit Restart Bit.

■ Special I/O Unit Restart Bits

Bit	Function	
A502.00	Unit No. 0 Restart Bit	Restarts the Unit when turned ON.
A502.01	Unit No. 1 Restart Bit	
to	to	
A502.15	Unit No. 15 Restart Bit	
A503.00	Unit No. 16 Restart Bit	
to	to	
A507.15	Unit No. 95 Restart Bit	

Note Replace the Unit if the error is not cleared even though the power supply is cycled or the Restart Bit is turned ON.

7-5-2 Allocations for Initial Settings Data

DM Area

The initial settings of the Analog Output Unit are set according to the data allocated in the Special I/O Unit Area in the DM Area. Settings, such as the number of outputs used and the analog output signal ranges, must be set in this area.

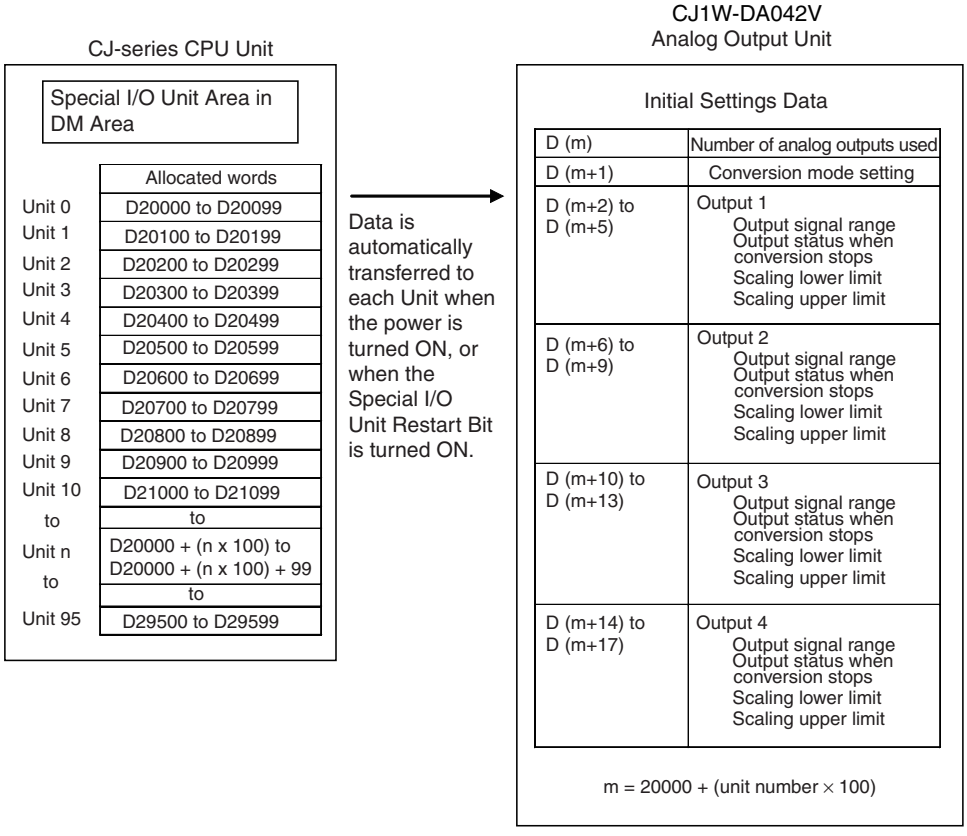

Note

1. The words in the Special I/O Unit Area in the DM Area that are allocated to the Analog Output Unit are set using the unit number switches on the front panel of the Unit. (Refer to page 284.)
2. If two or more Special I/O Units are assigned the same unit number, a Unit Number Duplication Error will occur (A401.13 will turn ON) and the PLC will not operate.

Allocations in DM Area

The following table shows the allocation of DM Area words and bits.

DM Area word (See note.)	Bits															
	15	14	13	12	11	10	09	08	07	06	05	04	03	02	01	00
D (m)	Not used. (Settings are ignored.)												Number of analog outputs used			
D (m+1)	Not used. (Settings are ignored.)								Conversion mode 00 hex: Cyclic Conversion Mode, A5 hex: Direct Conversion Mode							
D (m+2)	Not used. (Settings are ignored.)								Output 1 output signal range setting							
D (m+3)	Output 1 output status when conversion stops															
D (m+4)	Output 1 scaling lower limit															
D (m+5)	Output 1 scaling upper limit															

DM Area word (See note.)	Bits															
	15	14	13	12	11	10	09	08	07	06	05	04	03	02	01	00
D (m+6)	Not used. (Settings are ignored.)								Output 2 output signal range setting							
D (m+7)	Output 2 output status when conversion stops															
D (m+8)	Output 2 scaling lower limit															
D (m+9)	Output 2 scaling upper limit															
D (m+10)	Not used. (Settings are ignored.)								Output 3 output signal range setting							
D (m+11)	Output 3 output status when conversion stops															
D (m+12)	Output 3 scaling lower limit															
D (m+13)	Output 3 scaling upper limit															
D (m+14)	Not used. (Settings are ignored.)								Output 4 output signal range setting							
D (m+15)	Output 4 output status when conversion stops															
D (m+16)	Output 4 scaling lower limit															
D (m+17)	Output 4 scaling upper limit															

Note For the DM word addresses, m = D20000 + (unit number × 100)

■Set Values and Stored Values

Setting	Contents	Page
Number of analog outputs used (See note 1.)	0: No outputs used. 1: One output used (output 1 used). 2: Two outputs used (outputs 1 and 2 used). 3: Three outputs used (outputs 1, 2, and 3 used). 4: Four outputs used (outputs 1, 2, 3, and 4 used).	289
Conversion mode setting	00 hex: Cyclic Conversion Mode A5 hex: Direct Conversion Mode (See note 2.)	291
Output signal range	1: 0 to 10 V 3: –10 to 10 V 6: 1 to 5 V	289
Output status when conversion stops	0: CLR Outputs 0 or minimum value of output range (See note 3.). 1: HOLD Holds output value prior to stop. 2: MAX Outputs maximum value of range	292
Scaling settings	Any value other than 0 within range of ±32,000 (8300 hex to 7D00 hex) as long as the upper limit is not equal to the lower limit.	293

Note
1. Output numbers that are not to be used (set to 0) will be output at 0 V.
2. A CJ2H-CPU□□(-EIP) CPU Unit with unit version 1.1 or later and CJ2M/CJ3M-CPU□□ are required to use direct conversion. Direct conversion is not supported by CJ1 CPU Units.
3. The values output for the signal ranges will be 0 V for the range of ±10 V, and the minimum value for the other ranges. (Refer to page 292.)

7-5-3 I/O Refresh Data Allocations

I/O refresh data for the Analog Output Unit is exchanged according to the allocations in the Special I/O Unit Area.

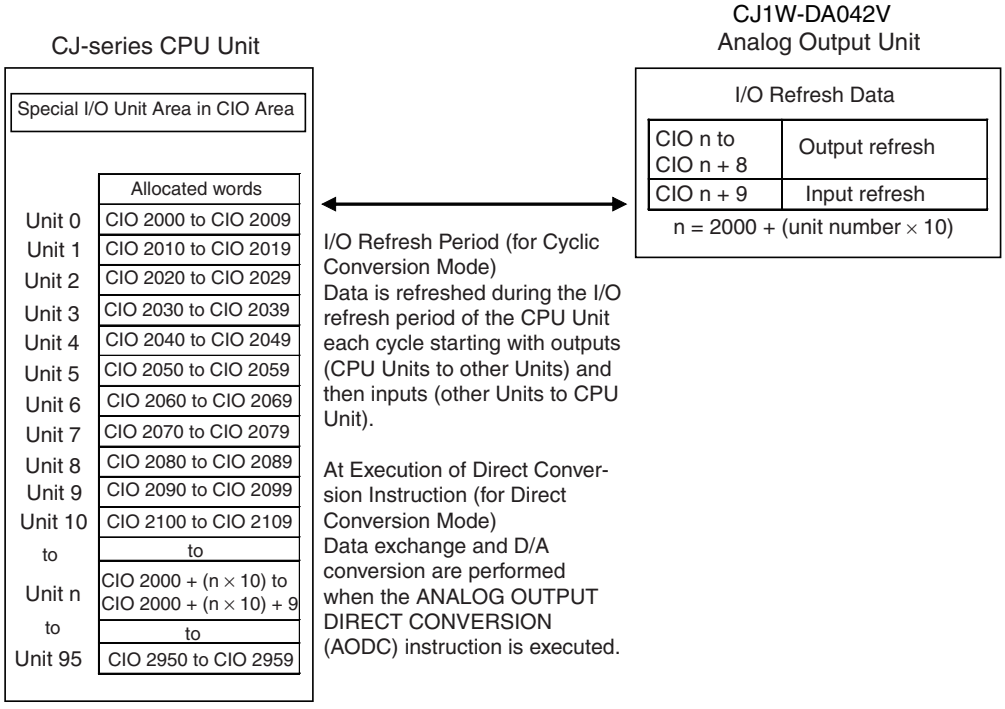

Note 1. The Special I/O Unit Area words that are occupied by the Analog Output Unit are set using the unit number switches on the front panel of the Unit. (Refer to page 279 for details on the method used to set the unit number switches.)

2. If two or more Special I/O Units are assigned the same unit number, a Unit Number Duplication Error will occur (A401.13 will turn ON) and the PLC will not operate.

Allocations in CIO Area

The allocations of words and bits in the CIO Area for Cyclic Conversion Mode are shown in the following table. In Direct Conversion Mode, the Conversion Enable Bits and Output Setting Error Flags are not used.

I/O	Word	Bits															
		15	14	13	12	11	10	09	08	07	06	05	04	03	02	01	00
Outputs (CPU Unit to Analog Output Unit)	n	Not used.												Conversion Enable Bits			
														Output 4	Output 3	Output 2	Output 1
	n+1	Output 1 set value															
		16^3				16^2				16^1				16^0			
	n+2	Output 2 set value															
	n+3	Output 3 set value															
	n+4	Output 4 set value															
	n+5	Not used.															
	n+6	Not used.															
	n+7	Not used.															
	n+8	Not used.															

I/O	Word	Bits															
		15	14	13	12	11	10	09	08	07	06	05	04	03	02	01	00
Inputs (Analog Output Unit to CPU Unit)	n+9	Alarm Flags								Not used.				Output Setting Error Bits			
														Output 4	Output 3	Output 2	Output 1

- For the CIO word addresses, n = CIO 2000 + (unit number × 10).

■ Set Values and Stored Values

Setting	Contents	Yes: Settable or usable No: Not settable or usable		Page
		Cyclic Conversion Mode	Direct Conversion Mode	
Conversion Enable Bit	0: Conversion outputs stopped. 1: Conversion outputs started.	Yes	No	290
Set value	16-bit binary data	Yes	Yes (See note.)	289
Output Setting Error Bit	0: No error 1: Output setting error	Yes	No	295
Alarm Flags	Bits 00 to 03: Output setting error	Yes	No	298
	Bits 04 to 07: Not used.	Not used.		
	Bit 08: Scaling data setting error	Yes	Yes	
	Bit 09: Output signal range setting error or error in number of outputs used setting	Yes	Yes	
	Bit 10: Output hold setting error	Yes	Yes	
	Bit 11: Not used	Not used.		
	Bit 12: Error in setting of conversion mode	Yes	Yes	
	Bit 13: Direct Conversion Mode	Yes	Yes	
	Bits 14 to 15: Not used	Not used.		

Note D/A conversion is performed for the set value when the ANALOG OUTPUT DIRECT CONVERSION (AODC) instruction is executed.

7-6 Analog Output Functions and Operating Procedures

7-6-1 Output Settings and Conversion Values

Number of Analog Outputs Used

The Analog Output Unit performs conversion processing only for the specified number of analog outputs. To specify the number of analog outputs, use a Programming Device to set word m in the DM Area as shown in the following diagram.

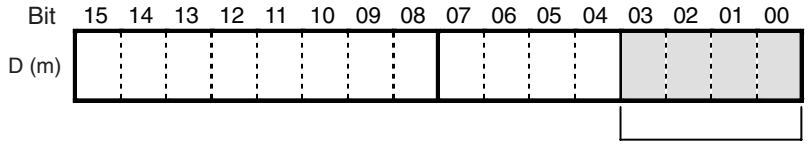

m = 20000 + (unit number × 100)

0: No outputs used.
1: One output used (output 1 used).
2: Two outputs used (outputs 1 and 2 used).
3: Three outputs used (outputs 1, 2, and 3 used).
4: Four outputs used (outputs 1, 2, 3, and 4 used).

- In Cyclic Conversion Mode, the conversion period for analog outputs can be made shorter by setting fewer analog outputs. 20 μs for 1 point, 25 μs for 2 points, 30 μs for 3 points, 35 μs for 4 points
- Output numbers that are not to be used (set to 0) will be output at 0 V.

Output Signal Range

Each of outputs 1 to 4 can be set to one of the following output signal ranges: 1 to 5 V, 0 to 10 V, or –10 to 10 V.

To specify the output signal range for each output, use a Programming Device to set words m+2, m+6, m+10, and m+14 in the DM Area as shown in the following diagram.

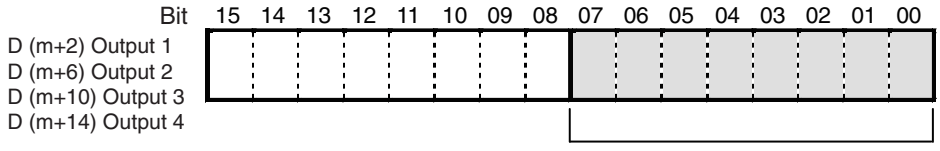

m = 20000 + (unit number × 100)

1: 0 to 10 V
3: –10 to 10 V
6: 1 to 5 V

Note When data memory settings have been carried out using a Programming Device, be sure to either cycle the power supply to the PLC, or set the Special I/O Unit Restart Bit to ON. The contents of the data memory settings will be transferred to the Special I/O Unit when the power is turned ON or the Special I/O Unit Restart Bit is turned ON.

Writing Set Values

Analog output set values are written to CIO words n+1 to n+4.

Word	Contents
n+1	Output 1 set value
n+2	Output 2 set value
n+3	Output 3 set value
n+4	Output 4 set value

- For the CIO word addresses, n = CIO 2000 + (unit number × 10).

Use MOV(021) or XFER(070) to write values in the user program.

Example 1

In this example, the set value from only one output is written. (The unit number is 0.)

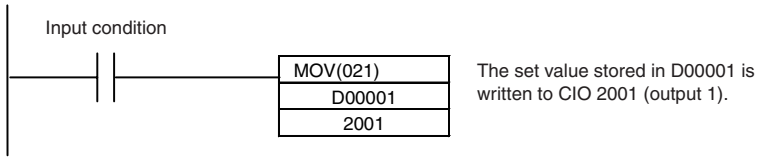

Example 2

In this example, multiple set values are written. (The unit number is #0.)

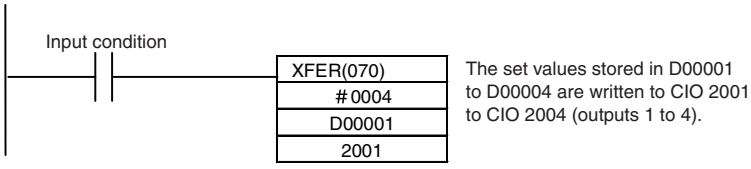

Note If the set value has been written outside the specified range, an output setting error will occur and the value set by the output hold function will be output.

Starting and Stopping Conversion

To begin analog output conversion in Cyclic Conversion Mode, turn ON the corresponding Conversion Enable Bit (word n, bits 00 to 03) from the user's program.

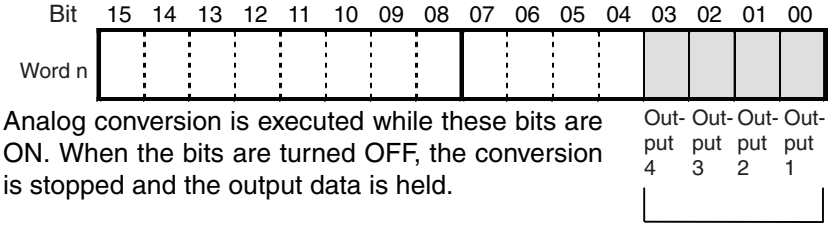

Analog conversion is executed while these bits are ON. When the bits are turned OFF, the conversion is stopped and the output data is held.

n = CIO 2000 + (unit number × 10)

Note

1. To perform analog output conversion in Direct Conversion Mode, execute the ANALOG OUTPUT DIRECT CONVERSION (AODC) instruction in the user's program. (Refer to page 291.)
2. The analog output when conversion is stopped depends on the output signal range setting and output hold setting. (Refer to pages 289 and 292.)
3. Conversion will not begin under the following conditions even if the Conversion Enable Bit is turned ON. (Refer to page 292.)
   1. When there is an output setting error.
   2. When a fatal error occurs in the PLC.
4. When the operation mode for the CPU Unit is changed from RUN mode or MONITOR mode to PROGRAM mode, the Conversion Enable Bits will all turn OFF. They will also turn OFF when the power supply to the PLC is turned ON. The output status at this time depends on the output hold function.

Example: In this example, conversion is begun for analog output number 1. (The unit number is 0.)

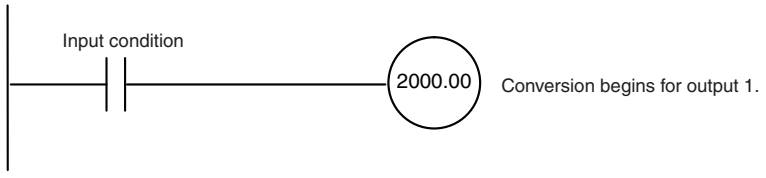

7-6-2 Conversion Mode Setting

Bits 00 to 07 in DM word m+1 can be used to set the conversion mode. The conversion mode that is set determines the timing of refreshing analog output values. This setting applies to analog outputs 1 to 4. There are not individual settings for each output.

The following table describes the conversion modes that can be set.

Conversion mode	Operation	Features	Remarks
Cyclic Conversion Mode	Output set values are refreshed during the I/O refresh period. Each conversion period, the refreshed set values are converted to analog values and output. It takes at least one cycle for the data set in the PLC to be transferred to the Analog Output Unit.	Operation is the same as that of the CJ1W-DA021/-DA041/-DA08V/-DA08C Analog Output Units.	This is the default setting.
Direct Conversion Mode	The output set values are refreshed and D/A conversion is performed immediately when the ANALOG OUTPUT DIRECT CONVERSION (AODC) instruction is executed in the CPU Unit. The set values are not refreshed unless the ANALOG OUTPUT DIRECT CONVERSION (AODC) instruction is executed. If the CPU Unit is in PROGRAM mode, the set values are automatically output using Cyclic Conversion Mode.	AODC can be used together with the ANALOG INPUT DIRECT CONVERSION (AIDC) instruction for the CJ1W-AD042 Analog Input Unit to create a consistent input-processing-output time. If these instructions are used in a scheduled interrupt task, a constant and consistent input-processing-output time can be created.	A CJ2H-CPU□□(-EIP) CPU Unit with unit version 1.1 or later and CJ2M/CJ3M-CPU□□ are required to use direct conversion.

To specify the conversion mode, use a Programming Device to set the bits in DM word (m+1) as shown in the following diagram.

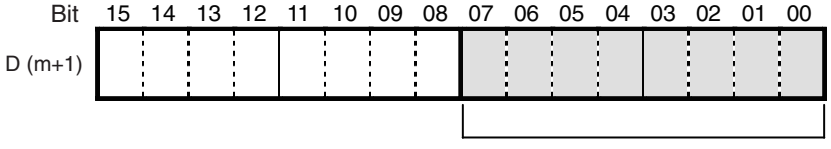

m = 20000 + (unit number × 100)

00 hex: Cyclic Conversion Mode
A5 hex: Direct Conversion Mode

Note 1. When DM Area settings have been carried out using a Programming Device, be sure to either cycle the power supply to the PLC, or turn ON the Special I/O Unit Restart Bit. The contents of the initial settings in the DM Area will be transferred to the Special I/O Unit when the power is turned ON or the Special I/O Unit Restart Bit is turned ON.

2.

Example

In this example, the set value for analog output 1 is output in Direct Conversion Mode. (The unit number is 0.)

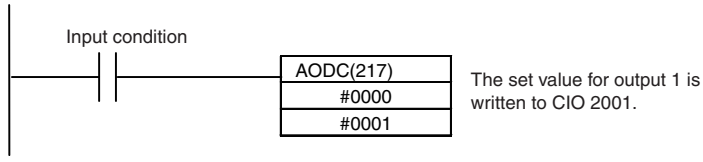

Example

In this example, the set value for analog outputs 1 to 4 are output in Direct Conversion Mode. (The unit number is 0.)

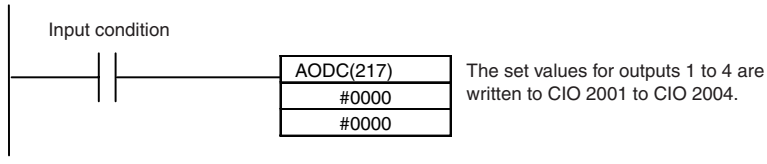

The ANALOG OUTPUT DIRECT CONVERSION (AODC) instruction is used in Direct Conversion Mode.

3. Refer to the *CS/CJ/NSJ-series Instruction Reference Manual* (Cat. No. W474) for information on the ANALOG OUTPUT DIRECT CONVERSION (AODC) instruction.
4. In Direct Conversion Mode, the set value specified with the ANALOG OUTPUT DIRECT CONVERSION (AODC) instruction will be output in RUN or MONITOR mode even if the Output Conversion Enable Bit is OFF.
5. Refer to page 481 for the instruction execution times for the ANALOG OUTPUT DIRECT CONVERSION (AODC) instruction.

7-6-3 Output Hold Function

The Analog Output Unit stops conversion under the following conditions and outputs the value set for the output hold function.

1,2,3...

1. When the Conversion Enable Bit is OFF in Cyclic Conversion Mode (Refer to page 289.)
2. When there is an output setting error. (Refer to page 295.)
3. When a fatal error occurs in the PLC.
4. When there is an I/O bus error.
5. When all loads are turned OFF from the CPU Unit
   In Direct Conversion Mode, the values set for the output hold function will be output after the loads are enabled again and until the ANALOG OUTPUT DIRECT CONVERSION (AODC) instruction is executed.
6. When there is a WDT (watchdog timer) error in the CPU Unit.
7. When the ANALOG OUTPUT DIRECT CONVERSION (AODC) instruction is executed in Direct Conversion Mode and the written set value is out of range.

CLR, HOLD, or MAX can be selected for the output status when conversion stops.

Output signal range	CLR	HOLD	MAX
1 to 5 V	0.8 V (–5% (full scale))	Voltage that was output just prior to stopping.	5.2 V (5% (full scale))
0 to 10 V	–0.5 V (–5% (full scale))	Voltage that was output just prior to stopping.	10.5 V (5% (full scale))
–10 to 10 V	0.0 V	Voltage that was output just prior to stopping.	11.0 V (5% (full scale))

To set the output hold function, use a Programming Device to set DM Area as shown in the following diagram.

DM Area word (See note.)	Function	Set value
D (m+3)	Output 1: Output status when conversion stops	0: CLR Outputs 0 or minimum value of range (–5%). 1: HOLD Holds output value prior to stop. 2: MAX Outputs maximum value of range (105%).
D (m+7)	Output 2: Output status when conversion stops	
D (m+11)	Output 3: Output status when conversion stops	
D (m+15)	Output 4: Output status when conversion stops	

Note For the DM word addresses, m = D20000 + (unit number x 100).

Note When DM Area settings have been carried out using a Programming Device, be sure to either cycle the power supply to the PLC, or turn ON the Special I/O Unit Restart Bit. The contents of the initial settings in the DM Area will be transferred to the Special I/O Unit when the power is turned ON or the Special I/O Unit Restart Bit is turned ON.

7-6-4 Output Scaling

When upper and lower limits have been preset in 16-bit binary data in the CPU Unit's DM Area within a range of –32,000 to 32,000 decimal (from 8300 to 7D00 hex), analog output set values (in user-specified units) with the upper and lower limits taken as full scale are converted from digital to analog. (See note.)

This scaling function eliminates the previous necessity of providing programs for numeric conversion to specified units.

Note To set the upper or lower limit to a negative number, use two's complement. (Set 8300 to FFFF hex for –32,000 to –1.)

Note

1. The upper limit is normally set to be greater than the lower limit, but it is also possible to set lower limit to be greater than the upper limit for reverse scaling.
2. Actual D/A conversion is executed at up to –5% to +105% of full scale. If values exceeding this range are set, an output setting value error will occur and the output hold function will operate.
3. When setting upper and lower limits in the DM Area in the specified units, be sure to make the settings in 16-bit binary data (with negative values set as two's complement).

4. If the scaling upper limit equals the lower limit, or if the scaling upper limit or lower limit is outside the range of ±32,000, a scaling data setting error occurs and scaling will not be performed. Scaling will not be performed but operation will be normal when both the upper and lower limits are set to 0000 (the default values).

Setting Upper and Lower Limits for Output Scaling

Set the upper and lower limits for scaling for outputs 1 to 4 in the following DM Area words.

DM Area word	Bits															
	15	14	13	12	11	10	09	08	07	06	05	04	03	02	01	00
DM (m+4)	Output 1 scaling lower limit															
DM (m+5)	Output 1 scaling upper limit															
DM (m+8)	Output 2 scaling lower limit															
DM (m+9)	Output 2 scaling upper limit															
DM (m+12)	Output 3 scaling lower limit															
DM (m+13)	Output 3 scaling upper limit															
DM (m+16)	Output 4 scaling lower limit															
DM (m+17)	Output 4 scaling upper limit															

m = 20000 + (unit number × 100)

Note For decimal numbers –32,000 to 32,000, set 16-bit binary data (8300 to 7D00 hex).

Example Setting 1

For this example, the following conditions are set in the DM Area.

Conditions	The values shown in parentheses are 16-bit binary data.
Output signal range	0 to 10 V
Scaling lower limit	0 (0000 hex)
Scaling upper limit	10,000 (2710 hex)

The following diagram shows the correspondence between output signals and converted scaling values.

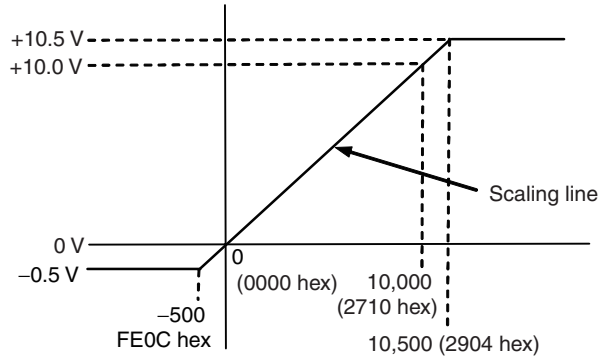

The values shown in parentheses are 16-bit binary data.	Output signal
0 (0000 hex)	0 V
10,000 (2710 hex)	10 V
–500 (FE0C hex)	–0.5 V
10,500 (2904 hex)	10.5 V

Example Setting 2 (Reverse Scaling)

For this example, the following conditions are set in the DM Area.

Conditions	The values shown in parentheses are 16-bit binary data.
Output signal range	0 to 10 V
Scaling lower limit	10,000 (2710 hex)
Scaling upper limit	0 (0000 hex)

The following diagram shows the correspondence between output signals and converted scaling values.

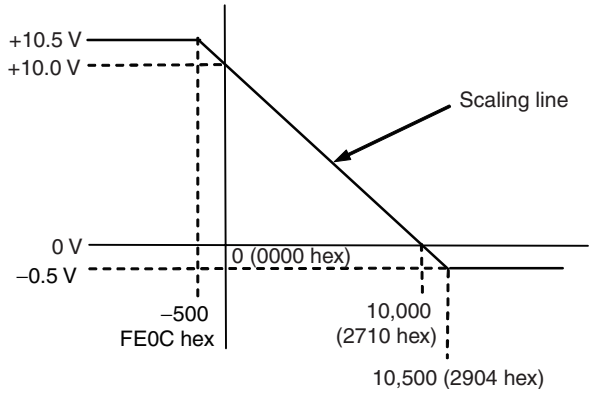

The values shown in parentheses are 16-bit binary data.	Output signal
10,000 (2710 hex)	0 V
0 (0000 hex)	10 V
10,500 (2904 hex)	–0.5 V
–500 (FE0C hex)	10.5 V

7-6-5 Output Setting Errors

If the analog output set value is greater than the specified range in Cyclic Conversion Mode, the corresponding flag in CIO word n+9, bits 00 to 03 will be turned ON to indicate a setting error.

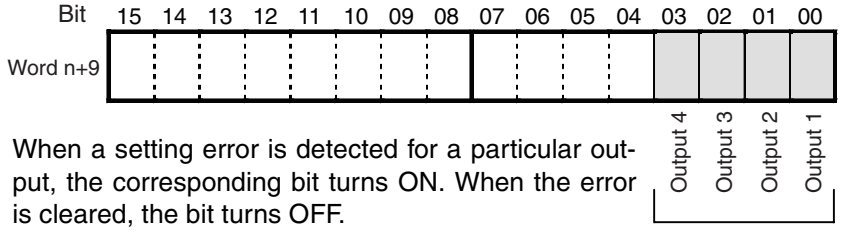

When a setting error is detected for a particular output, the corresponding bit turns ON. When the error is cleared, the bit turns OFF.

n = CIO 2000 + (unit number × 10)

Note The voltage for an output number at which a setting error has occurred will be output according to the output hold function.

7-7 Handling Errors and Alarms

7-7-1 Indicators and Error Flowchart

Indicators

If an alarm or error occurs in the Analog Output Unit, the ERC or ERH indicator on the front panel of the Unit will light.

Front panel of Unit

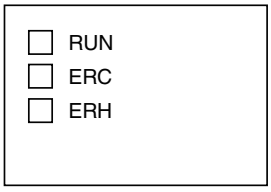

Indicator	Meaning	Indicator status	Operating status
RUN (green)	Operating	Lit	Operation normal.
		Not lit	Unit has stopped exchanging data with the CPU Unit.
ERC (red)	Error detected by Unit	Lit	Alarm has occurred or initial settings are incorrect.
		Not lit	Operating normally.
ERH (red)	Error in the CPU Unit	Lit	Error has occurred during data exchange with the CPU Unit.
		Not lit	Operating normally.

Troubleshooting Procedure

Use the following procedure for troubleshooting Analog Output Unit errors.

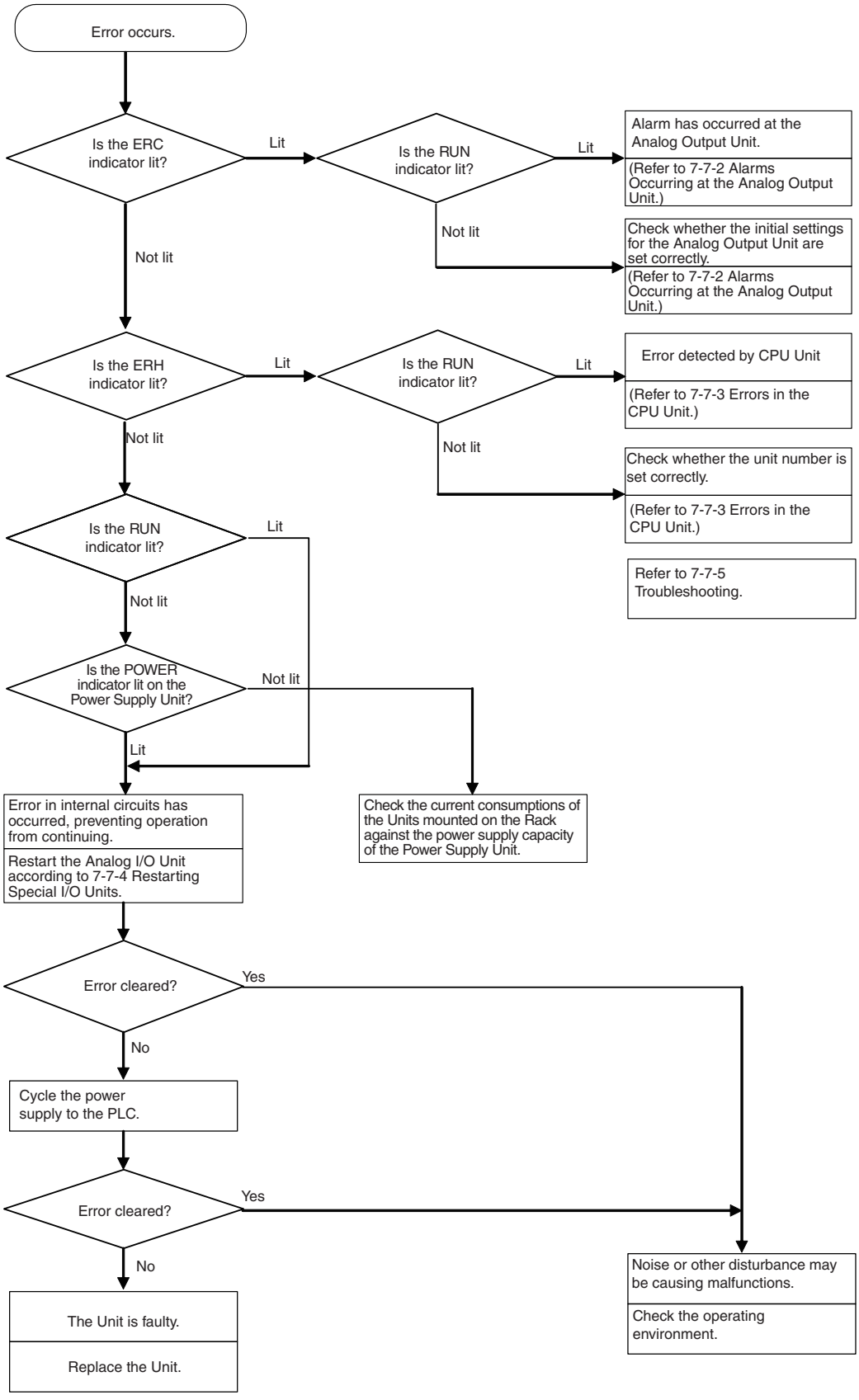

7-7-2 Alarms Occurring at the Analog Output Unit

The ERC indicator will light when the Analog Output Unit detects an alarm. The Alarm Flags in bits 08 to 15 of CIO word n+9 will turn ON or the Output Set Value Error Flags in bits 00 to 03 will turn ON.

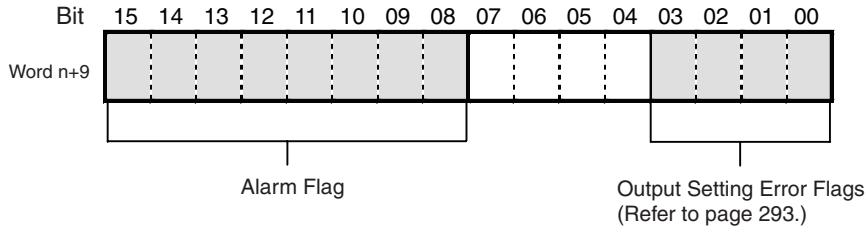

ERH and RUN Indicators Lit

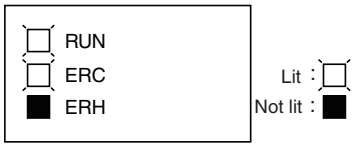

The ERC and RUN indicators will be lit if an error occurs while the Unit is operating normally. The following alarm flags will turn ON in CIO word n+9. These alarm flags will turn OFF automatically when the error is cleared.

n+9	Alarm flag	Error contents	Output status	Countermeasure
Bits 00 to 03	Output Set Value Error	The output setting range has been exceeded.	Output value set by output hold function.	Correct the set value.

n = CIO 2000 + (unit number × 10)

ERC Indicator: Lit, RUN Indicator: Not Lit

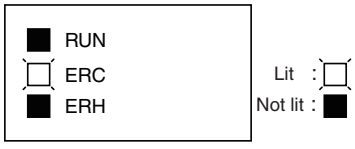

The ERC indicator will be lit when the initial settings for the Analog Output Unit are not set correctly. The following alarm flags will turn ON in CIO word n+9. These alarm flags will turn OFF when the error is cleared and the power to the PLC is cycled, or the Special I/O Unit Restart Bit is turned ON.

n+9	Alarm flag	Error contents	Countermeasure
Bit 08	Scaling data setting error	There is a mistake in the upper or lower limit settings for scaling. The setting range has been exceeded. The upper limit equals the lower limit (not 0000).	Correct the settings.
Bit 09	Output signal range setting error or error in number of outputs used setting	The setting of the number of outputs to use or an output signal range is wrong.	Set the number of analog outputs used to 0 to 4 and set the input signal ranges to 1, 3, or 6.

n+9	Alarm flag	Error contents	Countermeasure
Bit 10	Output hold setting error	The setting of the output status for when conversion is stopped is wrong.	Specify 00, 01, or 02.
Bit 12	Error in setting of conversion mode	The setting for Cyclic Conversion Mode or Direct Conversion Mode is wrong.	Set 00 hex or A5 hex.

n = CIO 2000 + (unit number × 10)

7-7-3 Errors in the CPU Unit

The ERH indicator will light if an error occurs in the CPU Unit or I/O bus and I/O refreshing with the Special I/O Units is not performed correctly, preventing the Analog Output Unit from operating.

ERH and RUN Indicators: Lit

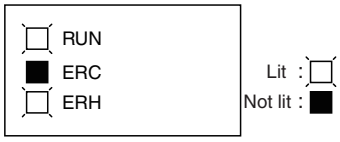

The ERH and RUN indicators will light if an I/O bus error occurs or if a WDT (watchdog timer) error occurs in the CPU Unit, resulting in incorrect I/O refresh with the Analog Output Unit. Cycle the power supply to the PLC or restart the Analog Output Unit.

Error	Error contents	Output status
I/O bus error	Error has occurred during data exchange with the CPU Unit.	Output value set by output hold function.
CPU Unit monitoring error	No response from CPU Unit for a specified period of time.	Maintains the status from before the error.
CPU Unit WDT error	Error has occurred in CPU Unit.	Output value set by output hold function.

ERH Indicator: Lit, RUN Indicator: Not Lit

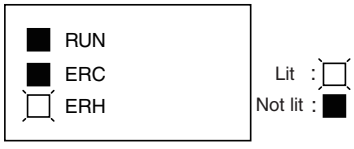

The unit number for the Analog Output Unit has not been set correctly.

Error	Error contents	Output status
Unit Number Duplication Error	The same unit number has been assigned to more than one Unit or the unit number was set to a value other than 00 to 95.	The output value will be 0 V.
Special I/O Unit Setting Error	The Special I/O Units registered in the I/O tables are different from the ones actually mounted.	

7-7-4 Restarting Special I/O Units

To restart the Analog Output Unit after changing the contents of the DM Area or correcting an error, cycle the power to the PLC or turn ON the Special I/O Unit Restart Bit.

■ Special I/O Unit Restart Bits

Bit	Function	
A502.00	Unit No. 0 Restart Bit	Restarts the Unit when turned ON.
A502.01	Unit No. 1 Restart Bit	
to	to	
A502.15	Unit No. 15 Restart Bit	
A503.00	Unit No. 16 Restart Bit	
to	to	
A507.15	Unit No. 95 Restart Bit	

Note

1. Replace the Unit if the error is not cleared even though the power supply is cycled or the Restart Bit is turned ON.
2. The output becomes 0 V during restart.

7-7-5 Troubleshooting

The following tables list the probable causes of troubles that may occur, and the countermeasures for dealing with them.

Analog Output Does Not Change

Probable cause	Countermeasure	Page
Number of analog outputs used is not set correctly.	Set the number of analog outputs used to enable all outputs that are being used.	289
The ANALOG OUTPUT DIRECT CONVERSION (AODC) instruction is not being executed in Direct Conversion Mode.	Execute the ANALOG OUTPUT DIRECT CONVERSION (AODC) instruction in the user program.	291
The output hold function is in operation.	Turn ON the Conversion Enable Bit.	292
The value set for the output set value is out of range.	Set the data within the range.	272

Value Does Not Change as Intended

Probable cause	Countermeasure	Page
The output signal range setting is wrong.	Correct the output signal range setting.	289
The specifications of the input device do not match those of the Analog Output Unit (e.g., input signal range, input impedance).	Change the input device.	270

Outputs Are Inconsistent

Probable cause	Countermeasure	Page
The output signals are being affected by external noise.	Try connecting the cable shield at the Analog Output Unit, or disconnecting it if it is already connected.	281

SECTION 8
CS-series Analog I/O Unit (CS1W-MAD44)

This section explains how to use the CS1W-MAD44 Analog I/O Unit.

8-1 Specifications 302
8-1-1 Specifications 302
8-1-2 I/O Function Block Diagram 305
8-1-3 Input Specifications 305
8-1-4 Output Specifications 307
8-2 Operating Procedure 310
8-2-1 Procedure Examples 311
8-3 Components and Switch Settings 317
8-3-1 Indicators 318
8-3-2 Unit Number Switches 319
8-3-3 Operation Mode Switch 319
8-3-4 Voltage/Current Switch. 320
8-4 Wiring 320
8-4-1 Terminal Arrangement 320
8-4-2 Internal Circuitry 321
8-4-3 Voltage Input Disconnection. 322
8-4-4 I/O Wiring Example 323
8-4-5 I/O Wiring Considerations 324
8-5 Exchanging Data with the CPU Unit 324
8-5-1 Outline of Data Exchange. 324
8-5-2 Unit Number Settings 325
8-5-3 Special I/O Unit Restart Bits 325
8-5-4 Fixed Data Allocations 326
8-5-5 I/O Refresh Data Allocations 329
8-6 Analog Input Functions and Operating Procedures 332
8-6-1 Input Settings and Conversion Values 332
8-6-2 Mean Value Processing. 334
8-6-3 Peak Value Hold Function 337
8-6-4 Input Disconnection Detection Function 338
8-7 Analog Output Functions and Operating Procedures 339
8-7-1 Output Settings and Conversions 339
8-7-2 Output Hold Function. 341
8-7-3 Output Setting Errors 342
8-8 Ratio Conversion Function 342
8-9 Adjusting Offset and Gain 345
8-9-1 Adjustment Mode Operational Flow 346
8-9-2 Input Offset and Gain Adjustment Procedures. 347
8-9-3 Output Offset and Gain Adjustment Procedures 353
8-10 Handling Errors and Alarms 361
8-10-1 Indicators and Error Flowchart. 361
8-10-2 Alarms Occurring at the Analog I/O Unit 363
8-10-3 Errors in the CPU Unit 365
8-10-4 Restarting Special I/O Units. 366
8-10-5 Troubleshooting 366

8-1 Specifications

8-1-1 Specifications

Item	CS1W-MAD44			
Unit type	CS-series Special I/O Unit			
Isolation	Between I/O and PLC signals: Photocoupler (No isolation between I/O signals.)			
External terminals	21-point detachable terminal block (M3 screws)			
Current consumption	200 mA max. at 5 VDC, 200 mA max. at 26 VDC			
Dimensions (mm) (See note 1.)	35 × 130 × 126 (W × H × D)			
Weight	450 g max.			
General specifications	Conforms to general specifications for SYSMAC CS-series Series.			
Mounting position	CS-series CPU Rack or CS-series Expansion Rack (Cannot be mounted to a C200H Expansion I/O Rack or a SYSMAC BUS Slave Rack.)			
Maximum number of Units	Units per Rack (CPU Rack or Expansion Rack) (See note 2.)	**Power Supply Unit**	**Maximum number of Units per Rack**	
		C200HW-PA204 C200HW-PA204S C200HW-PA204R C200HW-PD204	3 Units max.	
		C200HW-PA209R	6 Units max.	
	Units per basic system	When C200HW-PA209R Power Supply Units only are used: 6 Units max. × 8 Racks = 48 Units max.		
Data exchange with CPU Units	Special I/O Unit Area CIO 200000 to CIO 295915 (Words CIO 2000 to CIO 2959)	Exchanges 10 words of data per Unit.	CPU Unit to Analog I/O Unit	Analog output Peak value hold Conversion Enable Bit
			Analog I/O Unit to CPU Unit	Analog input Input disconnection detection Alarm flags
	Internal Special I/O Unit DM Area (D20000 to D29599)	Transmits 100 words of data per Unit at power-up or when the Unit is restarted.	CPU Unit to Analog I/O Unit	Input signal conversion enable/disable, input signal range setting Output signal conversion enable/disable, output signal range setting Ratio conversion function setting, constants Output status for output hold Mean value function setting

Item				CS1W-MAD44	
Input	Specifications			**Voltage input**	**Current input**
		Number of analog inputs		4	
		Input signal range (See note 3.)		1 to 5 V 0 to 5 V 0 to 10 V –10 to 10 V	4 to 20 mA (See note 4.)
		Maximum rated input (for 1 point) (See note 5.)		±15 V	±30 mA
		Input impedance		1 MΩ min.	250 Ω (rated value)
		Resolution		4,000 (full scale)	
		Converted output data		16-bit binary data	
		Accuracy (See note 6.)	23±2°C	±0.2% of full scale	±0.4% of full scale
			0°C to 55°C	±0.4% of full scale	±0.6% of full scale
		A/D conversion time (See note 7.)		1.0 ms/point max.	
	Functions	Mean value processing	Stores the last “n” data conversions in the buffer, and stores the the mean value of the conversion values. Number of mean value buffers: n = 2, 4, 8, 16, 32, 64		
		Peak value holding	Stores the maximum conversion value while the Peak Value Hold Bit is ON.		
		Input disconnection detection (See note 9.)	Detects the disconnection and turns ON the Disconnection Detection Flag.		
Output	Specifications			**Voltage output**	
		Number of analog outputs		4	
		Output signal range (See note 3.)		1 to 5 V 0 to 5 V 0 to 10 V –10 to 10 V	
		Output impedance (for 1 point)		0.5 Ω max.	
		Max. output current		12 mA	
		Resolution		4,000 (full scale)	
		Set data		16-bit binary data	
		Accuracy (See note 6.)	23±2°C	±0.3% of full scale	
			0°C to 55°C	±0.5% of full scale	
		D/A conversion time (See note 7.)		1.0 ms/point max.	
	Functions	Output hold function	Outputs the specified output status (CLR, HOLD, or MAX) under any of the following circumstances. When the Conversion Enable Bit is OFF. (See note 8.) In adjustment mode, when a value other than the output number is output during adjustment. When there is an output setting error or a fatal error occurs at the PLC. When the CPU Unit is on standby. When the Load is OFF.		
Other	Functions	Ratio conversion function	Stores the results of positive and negative gradient analog inputs calculated for ratio and bias as analog output values. Positive gradient: Analog output = A × Analog input + B (A = 0 to 99.99, B = 8,000 to 7FFF hex) Negative gradient: Analog output = F – A × Analog input + B (A = 0 to 99.99, B = 8,000 to 7FFF hex, F = output range max. value)		

Note 1. Refer to *Dimensions* on page 441 for details on the Unit’s dimensions.

2. The maximum number of Analog I/O Units that can be mounted to one Rack will varies depending on the current consumption of the other Units mounted to the Rack.
3. Input and output signal ranges can be set for each input and output.
4. Voltage input or current input are chosen by using the voltage/current switch at the back of the terminal block.
5. The Analog I/O Unit must be operated according to the input specifications provided here. Operating the Unit outside these specifications will cause the Unit to malfunction.
6. The accuracy is given for full scale. For example, an accuracy of ±0.2% means a maximum error of ±8 (BCD).

   The default setting is adjusted for voltage input. To use current input, perform the offset and gain adjustments as required.
7. A/D conversion time is the time it takes for an analog signal to be stored in memory as converted data after it has been input. It takes at least one cycle before the converted data is read by the CPU Unit. D/A conversion time is the time required for converting and outputting the PLC data. It takes at least one cycle for the data stored in the PLC to be read by the Analog I/O Unit.
8. When the operation mode for the CPU Unit is changed from RUN mode or MONITOR mode to PROGRAM mode, or when the power is turned ON, the Output Conversion Enable Bit will turn OFF. The output status specified according to the output hold function will be output.
9. Input disconnection detection is valid only when the 1 to 5-V or 4 to 20-mA range is set. If there is no input signal for when the 1 to 5-V or 4 to 20-mA range is set, the Disconnection Detection Flag will turn ON.

8-1-2 I/O Function Block Diagram

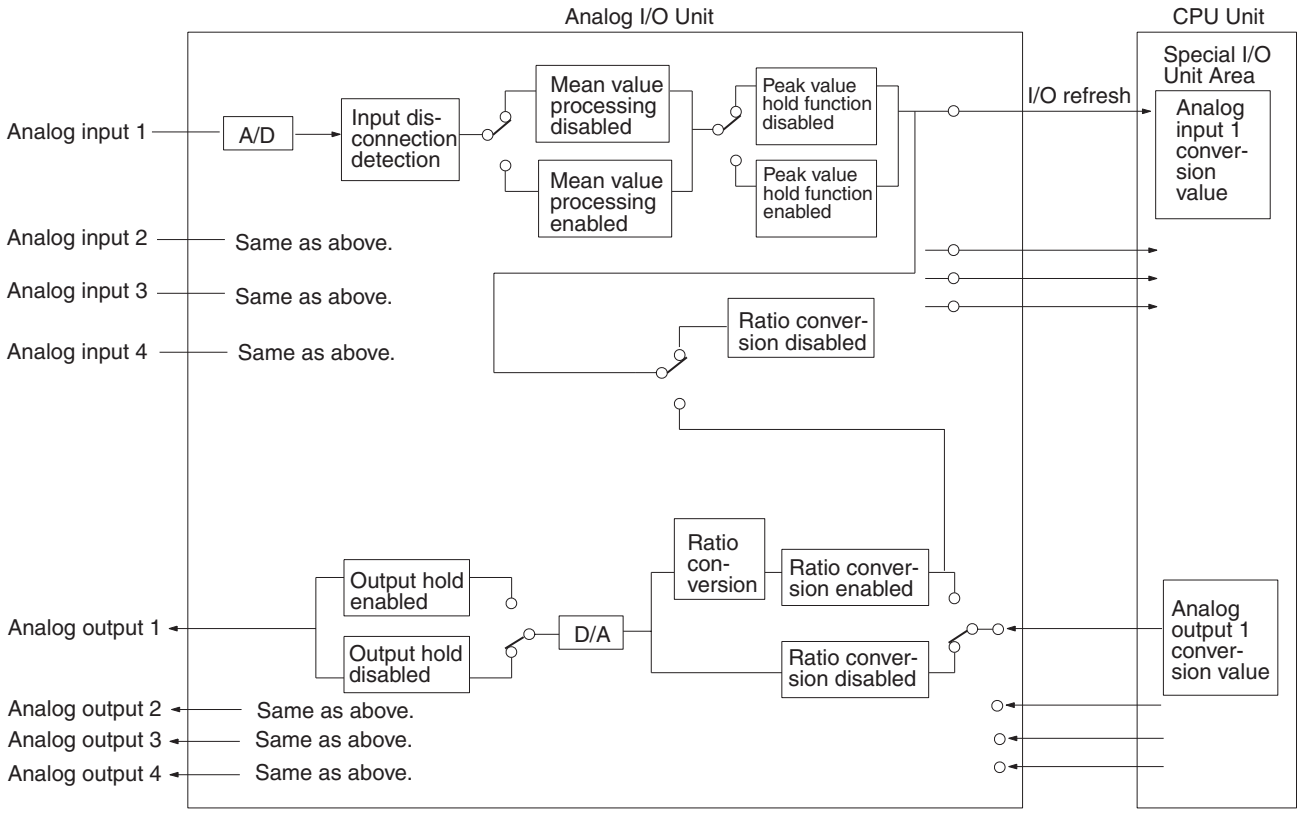

8-1-3 Input Specifications

If signals that are outside the specified range provided below are input, the conversion values used will be either the maximum or minimum value.

Range: 1 to 5 V (4 to 20 mA)

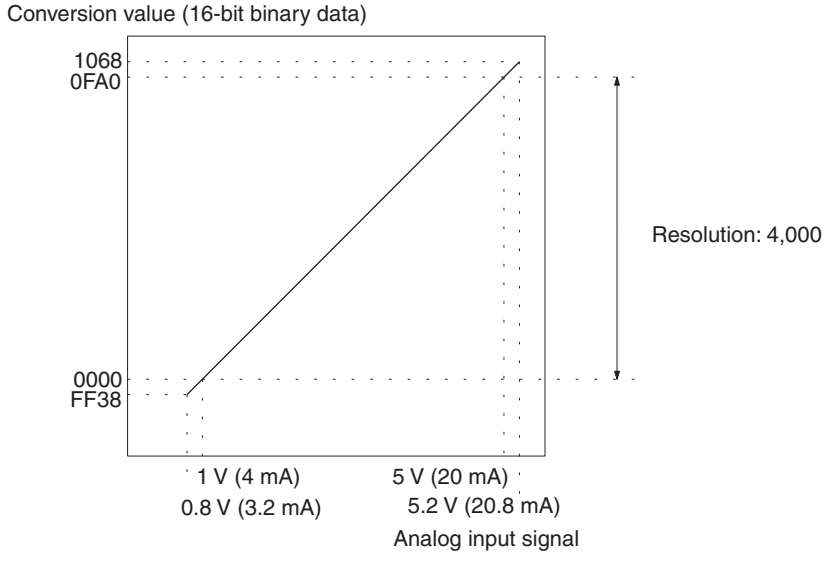

Range: 0 to 10 V

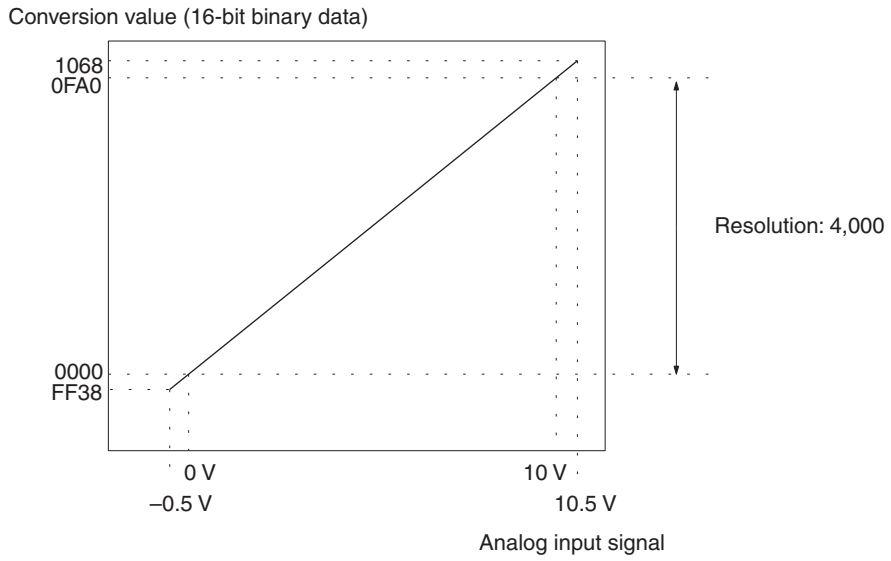

Range: 0 to 5 V

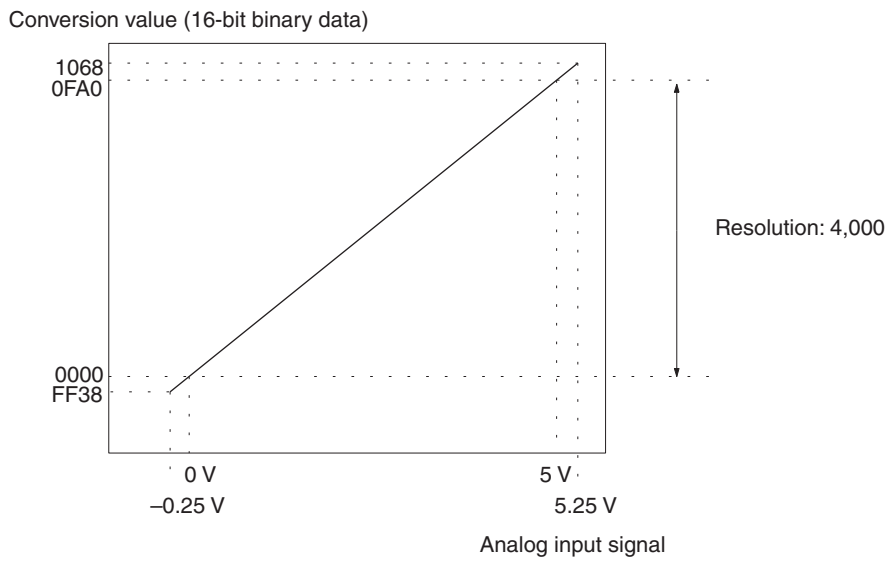

Range: –10 to 10 V

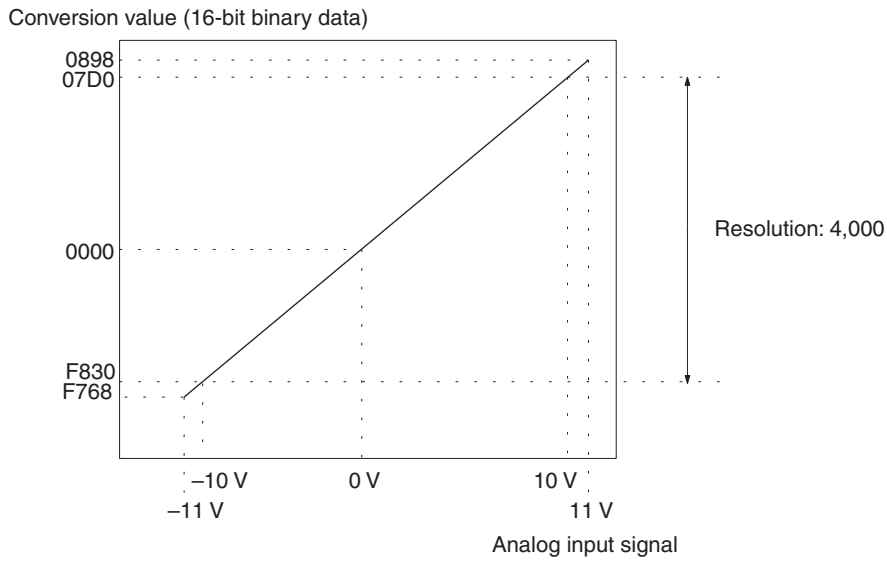

8-1-4 Output Specifications

If the set value is outside the specified range provided below, an output setting error will occur, and the output specified by the output hold function will be output.

Range: 1 to 5 V

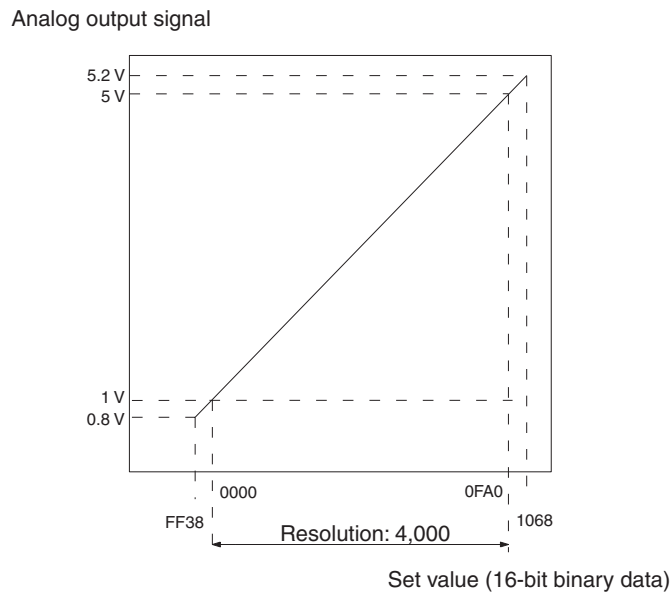

Range: 0 to 10 V

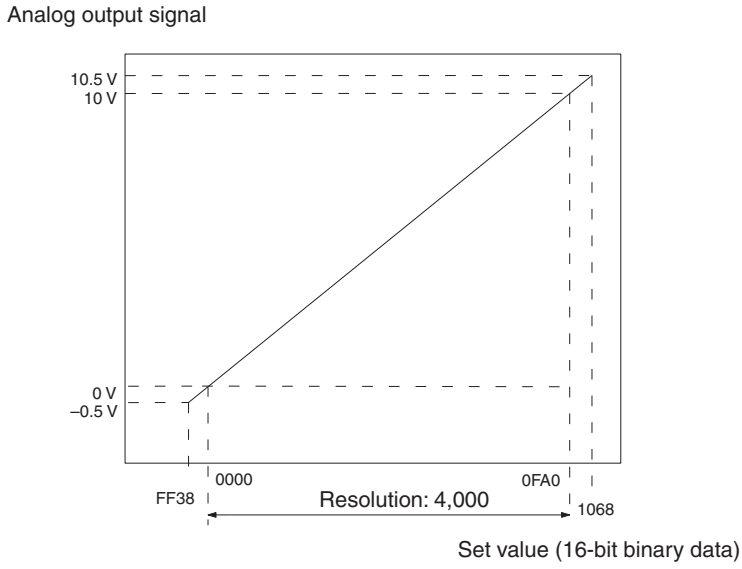

Range: 0 to 5 V

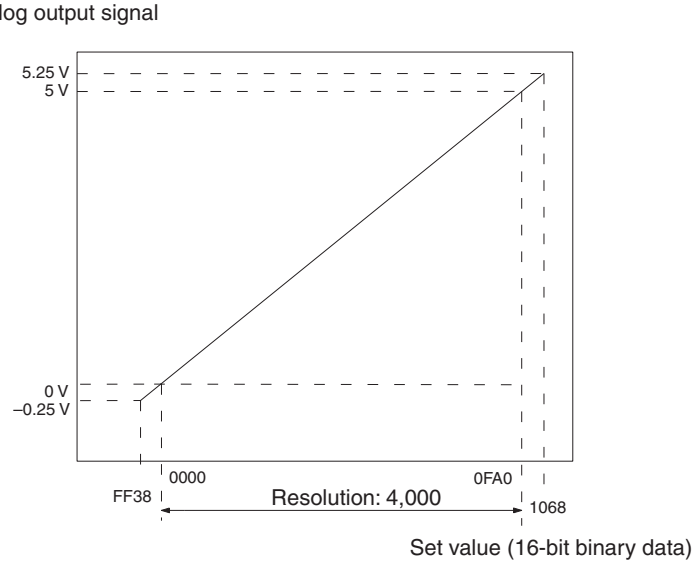

Range: –10 to 10 V

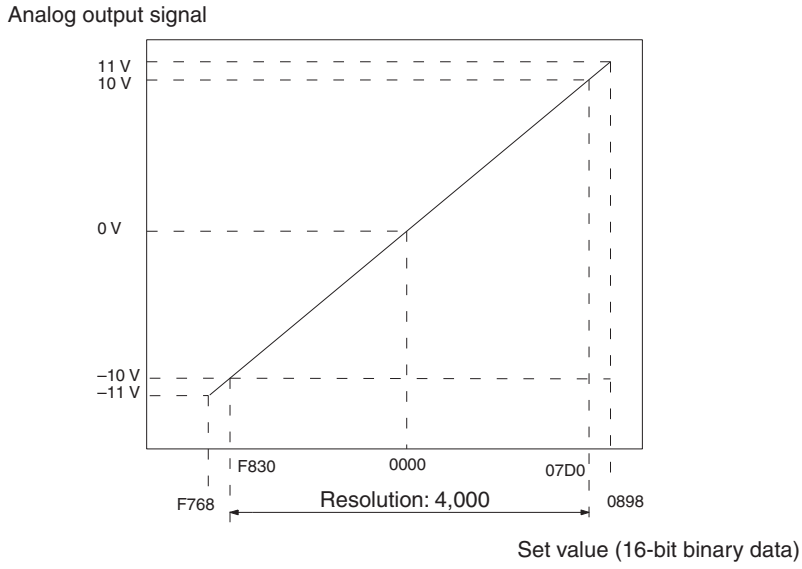

Note The conversion values and set values for a range of –10 to 10 V will be as follows:

16-bit binary data	BCD
F768	–2200
:	:
FFFF	–1
0000	0
0001	1
:	:
0898	2200

8-2 Operating Procedure

Follow the procedure outlined below when using Analog I/O Units.

Installation and Settings

1,2,3...

1. Set the operation mode switch on the rear panel of the Unit to normal mode.
2. Set the voltage/current switch at the back of the terminal block.
3. Wire the Unit.
4. Use the unit number switches on the front panel of the Unit to set the unit number.
5. Turn ON the power to the PLC.
6. Create the I/O tables.
7. Make the Special I/O Unit DM Area settings.
   - Set the I/O numbers to be used.
   - Set the input and output signal ranges.
   - Set the number of mean processing samplings.
   - Set the output hold function.
   - Set the ratio conversion usage, the ratio set value, and the bias value.
8. Turn the power to the PLC OFF and ON, or turn ON the Special I/O Unit Restart Bit.

When the input or output of the connected devices needs to be calibrated, follow the procedures in *Offset Gain Adjustment* below. Otherwise, skip to *Operation* below.

Offset and Gain Adjustment

1,2,3...

1. Set the operation mode on the rear panel of the Unit to adjustment mode.
2. Set the voltage/current switch at the back of the terminal block.
3. Turn ON the power to the PLC.
4. Adjust the offset and gain.
5. Turn OFF the power to the PLC.
6. Change the setting of the operation mode switch on the rear panel of the Unit back to normal mode.

Operation

1,2,3...

1. Turn ON the power to the PLC.
2. Ladder program
   - Read conversion values or write set values by means of MOV(021) and XFER(070).
   - Start and stop conversion output.
   - Specify the peak hold function.
   - Obtain disconnection notifications and error codes.

8-2-1 Procedure Examples

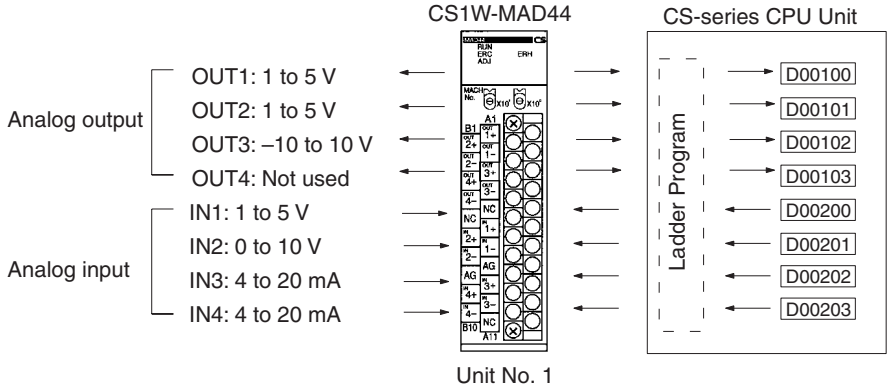

Setting the Analog I/O Unit

1,2,3... 1. Set the operation mode switch on the rear panel of the Unit. Refer to *8-3-4 Voltage/Current Switch* for further details.

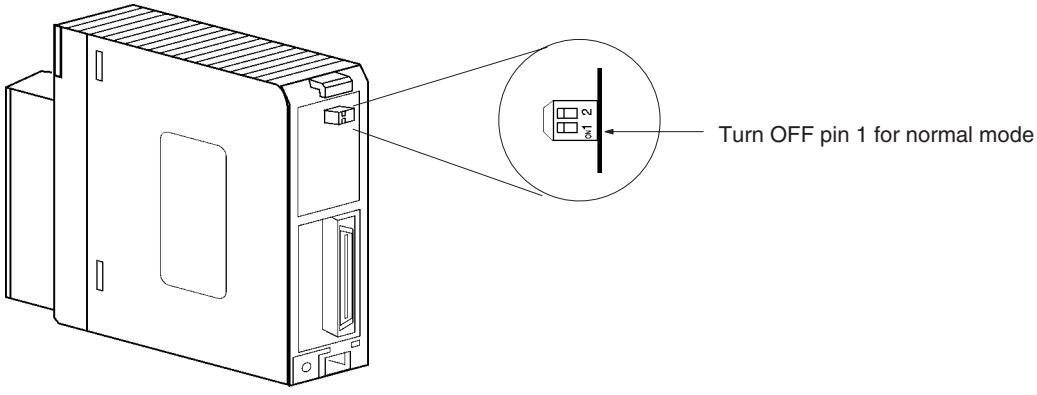

2. Set the voltage/current switch. Refer to *8-3-4 Voltage/Current Switch* for further details.

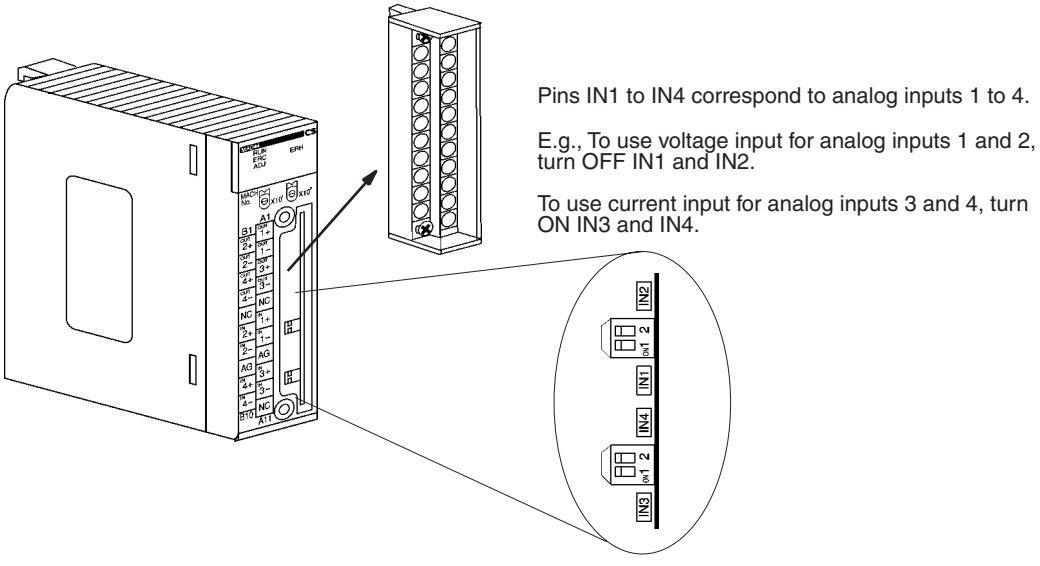

3. Mount and wire the Analog I/O Unit. Refer to *1-2-1 Mounting Procedure*, *8-4 Wiring* or *8-4-4 I/O Wiring Example* for further details.

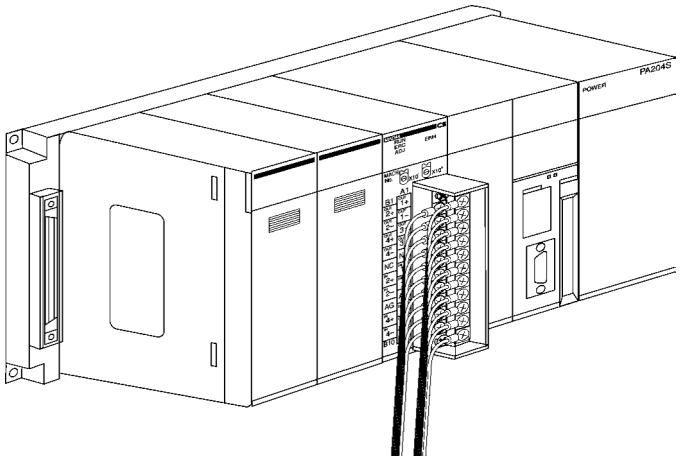

4. Set the unit number switches. Refer to *8-3-2 Unit Number Switches* for further details.

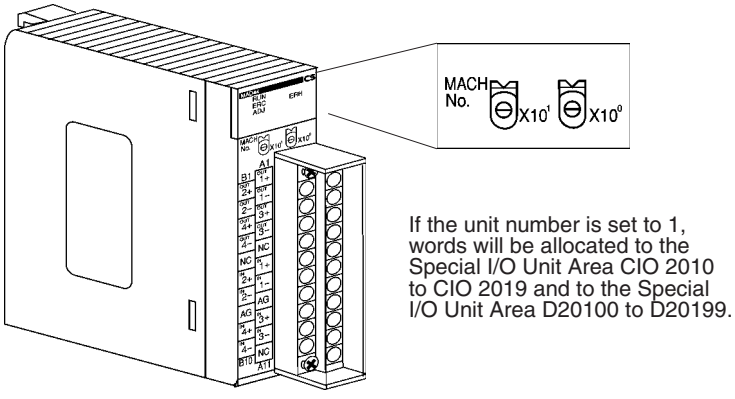

5. Turn ON the power to the PLC.

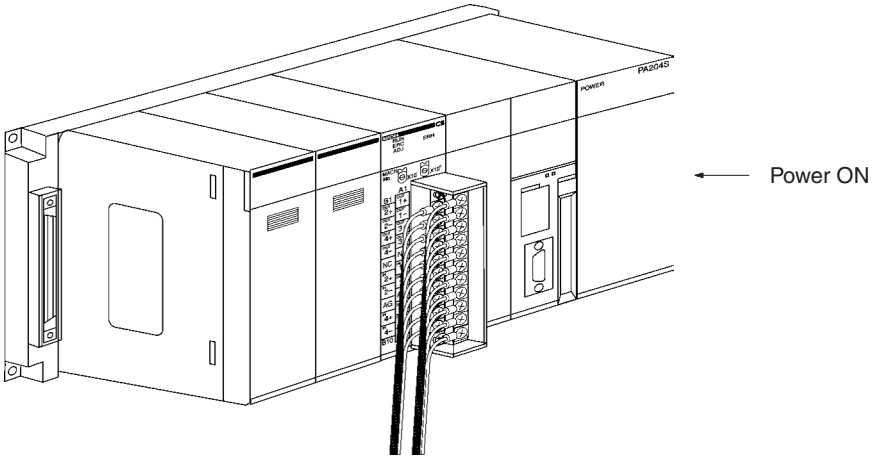

Creating I/O Tables

After turning ON the power to the PLC, be sure to create the I/O tables.

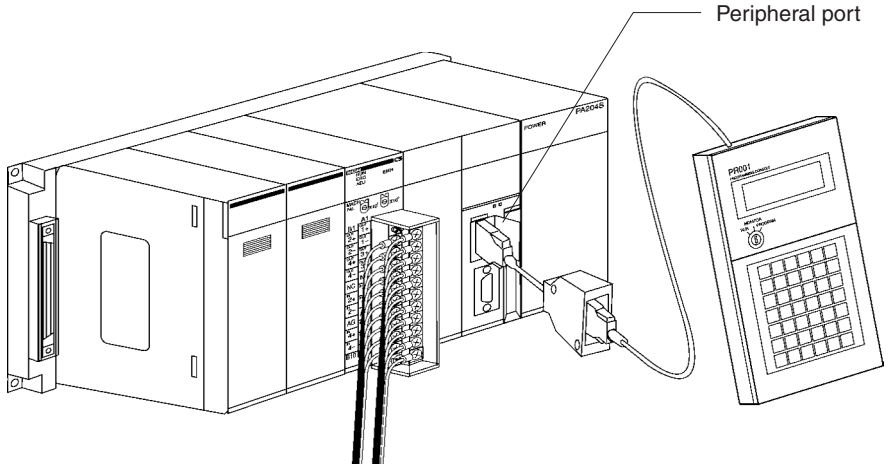

Initial Data Settings

1,2,3... 1. Specify the Special I/O Unit DM Area settings. Refer to *Allocations in DM Area* on page 326 for further details.

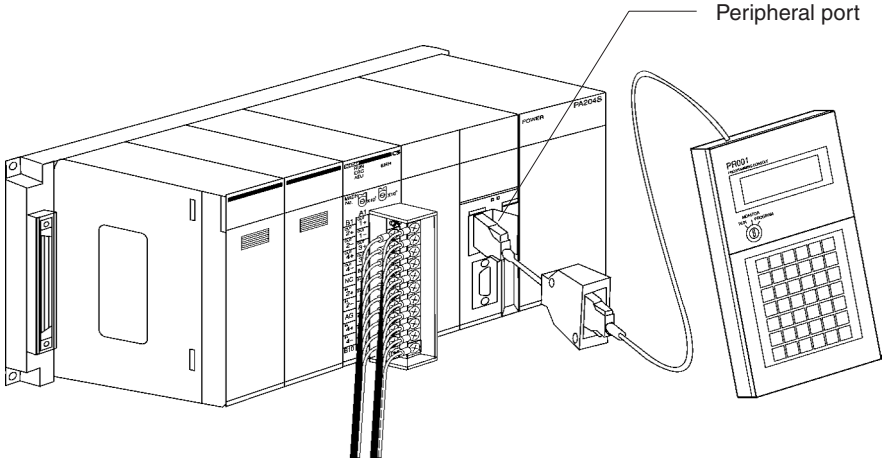

Setting conditions

Unit No. 1

Analog input 1: 1 to 5 V
Analog input 2: 0 to 10 V
Analog input 3: 4 to 20 mA
Analog input 4: 4 to 20 mA

Analog output 1: 1 to 5 V
Analog output 2: 1 to 5 V
Analog output 3: –10 to 10 V
Analog output 4: Not used.

- The following diagram shows the input and output settings used. Refer to *8-6-1 Input Settings and Conversion Values* or *8-7-1 Output Settings and Conversions* for more details.

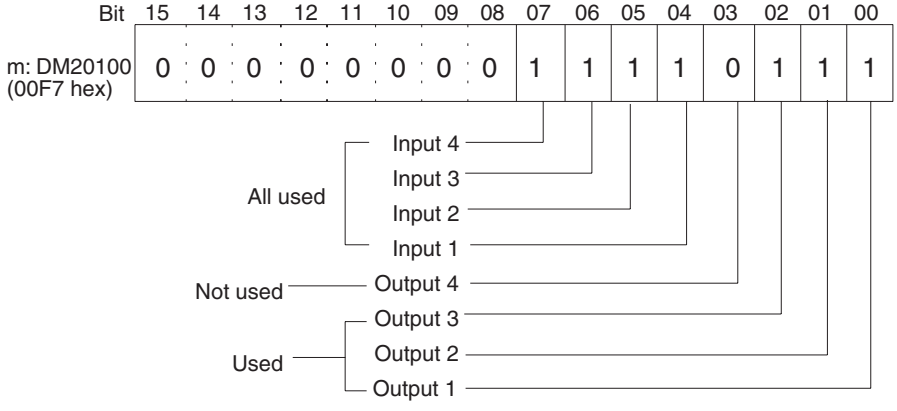

- The following diagram shows the input and output range settings. Refer to *8-6-1 Input Settings and Conversion Values* or *8-7-1 Output Settings and Conversions* for more details.

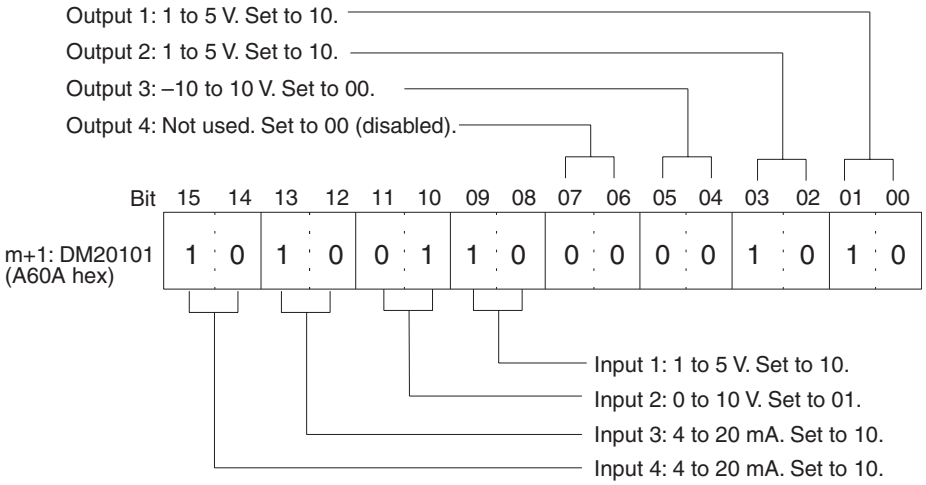

2. Restart the CPU Unit.

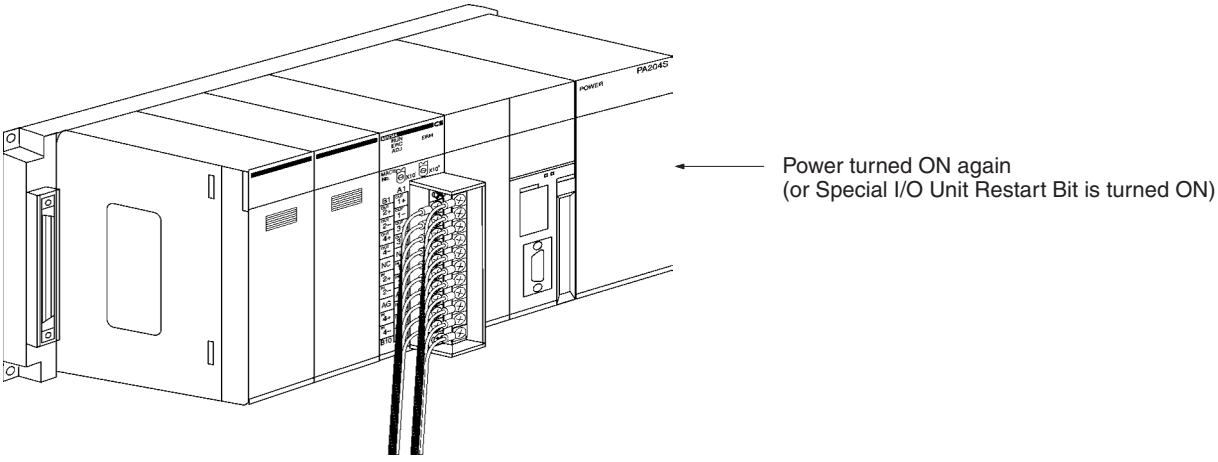

Creating Ladder Programs

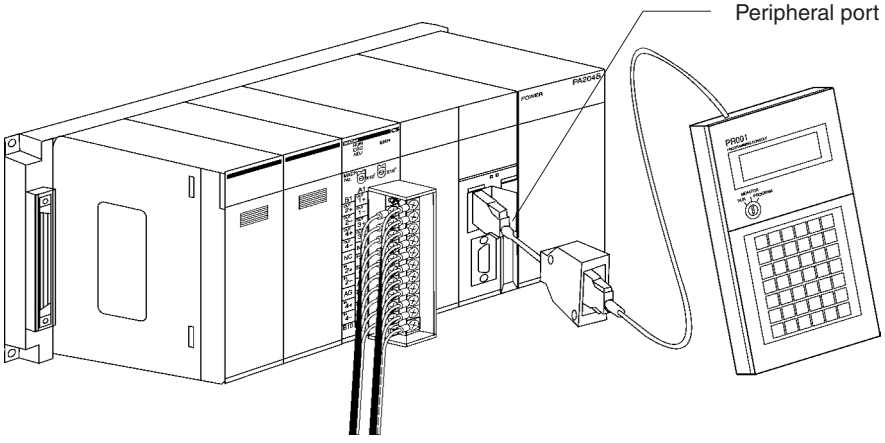

1,2,3... 1. The following example describes how to use analog inputs.

The data that is converted from analog to digital and output to CIO words (n + 5) to (n+ 8) of the Special I/O Unit Area (CIO 2015 to CIO2018), is stored in the specified addresses D00100 to D00103 as signed binary values 0000 to 0FA0 hex.

- The following table shows the addresses used for analog input.

Input number	Input signal range	Input conversion value address (n = CIO 2010) (See note a.)	Conversion data holding address (See note b.)
1	1 to 5 V	(n+5) = CIO 2015	D00100
2	0 to 10 V	(n+6) = CIO 2016	D00101
3	4 to 20 mA	(n+7) = CIO 2017	D00102
4	4 to 20 mA	(n+8) = CIO 2018	D00103

Note a) The addresses are set according to the unit number of the Special I/O Unit. Refer to *8-3-2 Unit Number Switches* for further details.

b) Set as required.

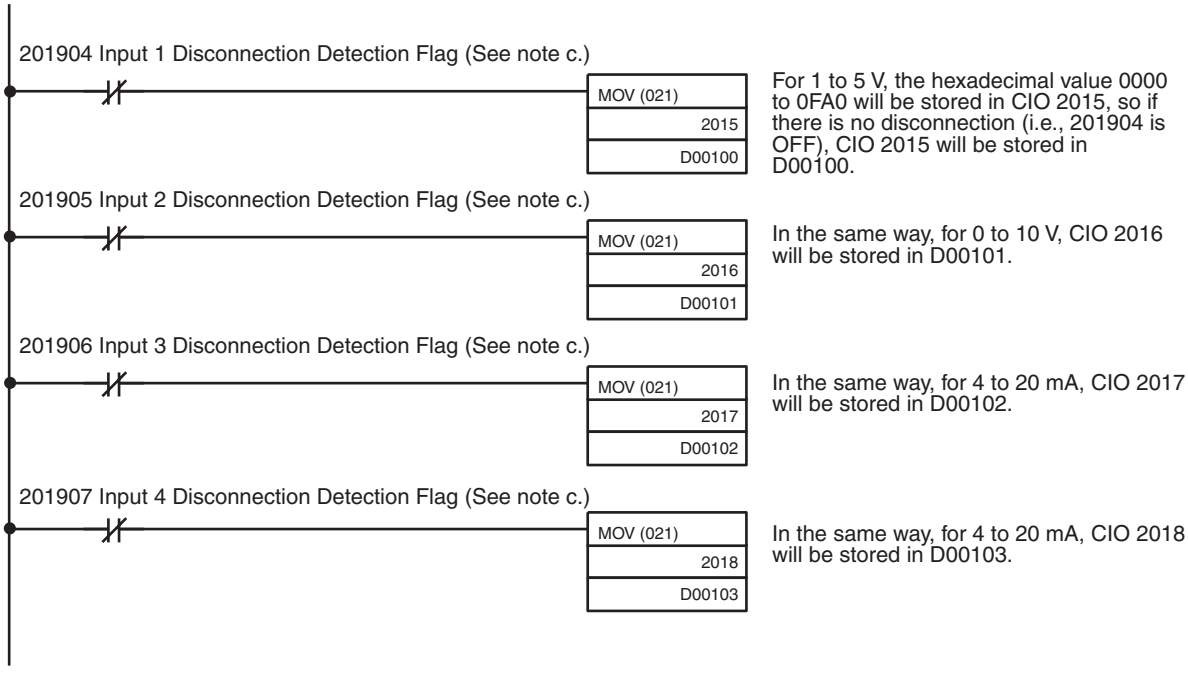

c) The input Disconnection Detection Flag is allocated to bits 04 to 07 of word (n+9). Refer to *Allocations for Normal Mode* on page 330 and *8-6-4 Input Disconnection Detection Function* for further details.

2. The following example shows how to use analog outputs.

The setting address D00200 is stored in words (n+1) to (n+3) of the Special I/O Unit Area (CIO 2011 to CIO 2013) as a signed binary value between 0000 to 0FA0 hex.

- The following table shows the addresses used for analog output.

Output number	Input signal range	Output setting address (n = CIO 2010) (See note a.)	Original conversion address (See note b.)
1	1 to 5 V	(n+1) = CIO 2011	D00200
2	0 to 10 V	(n+2) = CIO 2012	D00201
3	–10 to 10 V	(n+3) = CIO 2013	D00202
4	Not used.	---	---

Note a) The addresses are set according to the unit number of the Special I/O Unit. Refer to *8-3-2 Unit Number Switches* for further details.

b) Set as required.

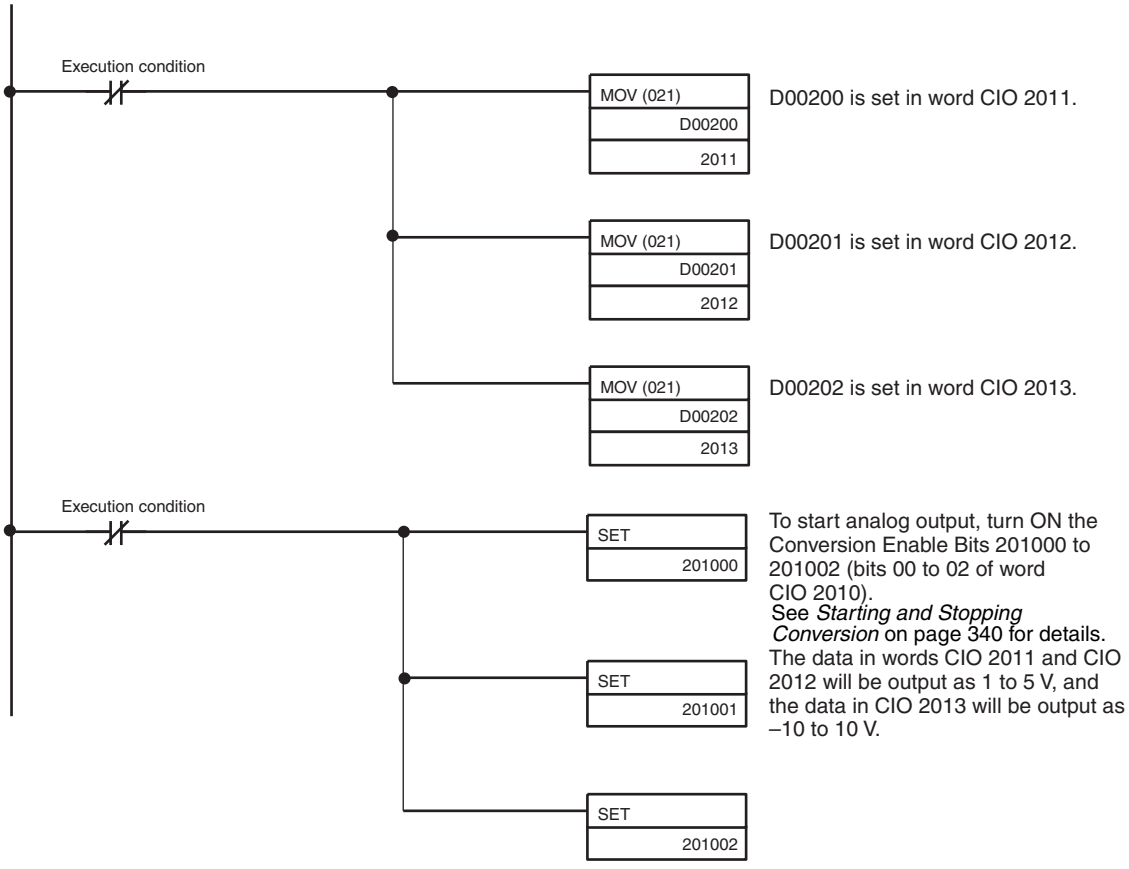

8-3 Components and Switch Settings

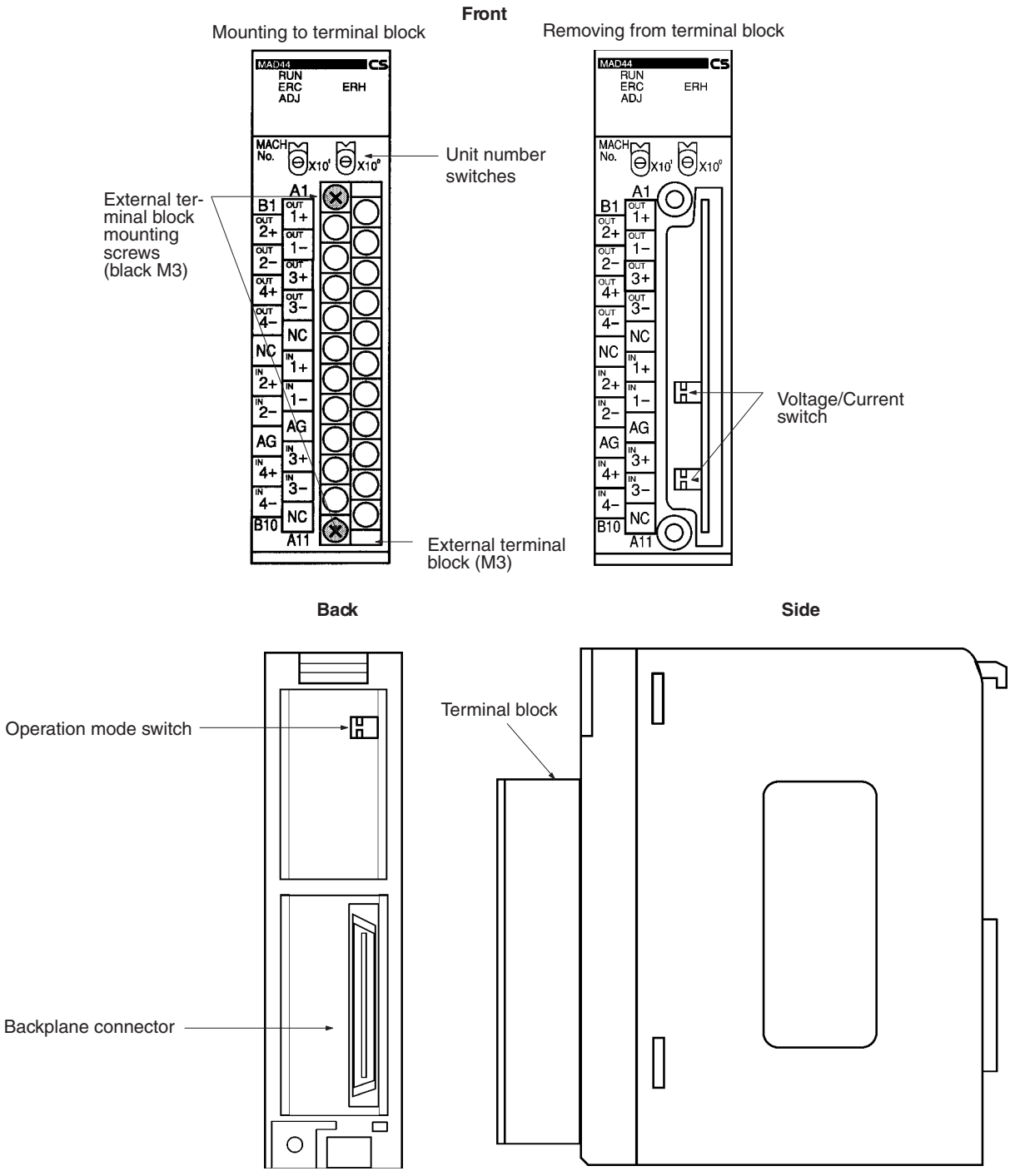

The terminal block is attached by a connector. It can be removed by loosening the two black mounting screws located at the top and bottom of the terminal block.

Check to be sure that the black terminal block mounting screw is securely tightened to a torque of 0.5 N·m.

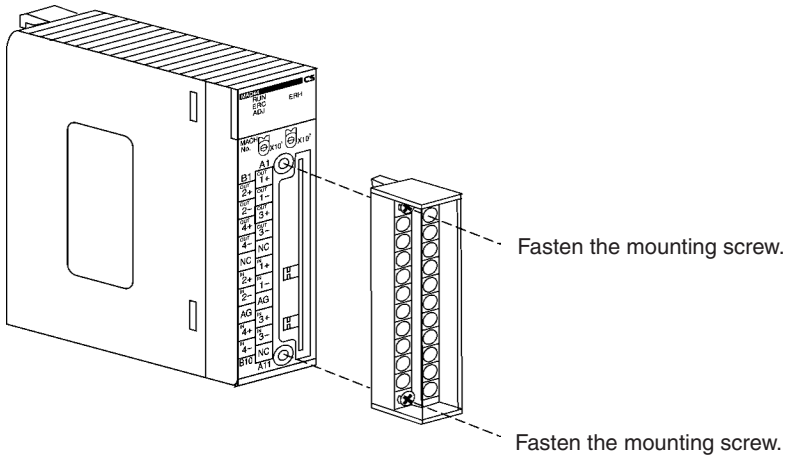

8-3-1 Indicators

The indicators show the operating status of the Unit. The following table shows the meanings of the indicators.

LED	Meaning	Indicator	Operating status
RUN (green)	Operating	Lit	Operating in normal mode.
		Not lit	Unit has stopped exchanging data with the CPU Unit.
ERC (red)	Error detected by Unit	Lit	Alarm has occurred (such as disconnection detection) or initial settings are incorrect.
		Not lit	Operating normally.
ADJ (yellow)	Adjusting	Flashing	Operating in offset/gain adjustment mode.
		Not lit	Other than the above.
ERH (red)	Error in the CPU Unit	Lit	Error has occurred during data exchange with the CPU Unit.
		Not lit	Operating normally.

8-3-2 Unit Number Switches

The CPU Unit and Analog I/O Unit exchange data via the Special I/O Unit Area and the Special I/O Unit DM Area. The Special I/O Unit Area and Special I/O Unit DM Area word addresses that each Analog I/O Unit occupies are set by the unit number switches on the front panel of the Unit.

Always turn OFF the power before setting the unit number. Use a flat-blade screwdriver, being careful not to damage the slot in the screw. Be sure not to leave the switch midway between settings.

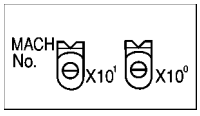

Switch setting	Unit number	Special/O Unit Area addresses	Special I/O Unit DM Area addresses
0	Unit #0	CIO 2000 to CIO 2009	D20000 to D20099
1	Unit #1	CIO 2010 to CIO 2019	D20100 to D20199
2	Unit #2	CIO 2020 to CIO 2029	D20200 to D20299
3	Unit #3	CIO 2030 to CIO 2039	D20300 to D20399
4	Unit #4	CIO 2040 to CIO 2049	D20400 to D20499
5	Unit #5	CIO 2050 to CIO 2059	D20500 to D20599
6	Unit #6	CIO 2060 to CIO 2069	D20600 to D20699
7	Unit #7	CIO 2070 to CIO 2079	D20700 to D20799
8	Unit #8	CIO 2080 to CIO 2089	D20800 to D20899
9	Unit #9	CIO 2090 to CIO 2099	D20900 to D20999
10	Unit #10	CIO 2100 to CIO 2109	D21000 to D21099
to	to	to	to
n	Unit #n	CIO 2000 + (n × 10) to CIO 2000 + (n × 10) + 9	D20000 + (n × 100) to D20000 + (n × 100) + 99
to	to	to	to
95	Unit #95	CIO 2950 to CIO 2959	D29500 to D29599

Note If two or more Special I/O Units are assigned the same unit number, a “UNIT No. DPL ERR” error (in the Programming Console) will be generated (A40113 will turn ON) and the PLC will not operate.

8-3-3 Operation Mode Switch

The operation mode switch on the back panel of the Unit is used to set the operation mode to either normal mode or adjustment mode (for adjusting off-set and gain).

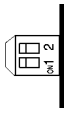

Pin number		Mode
1	2	
OFF	OFF	Normal mode
ON	OFF	Adjustment mode

⚠ **Caution** Do not set the pins to any combination other than those shown in the above table. Be sure to set pin 2 to OFF.

⚠ **Caution** Be sure to turn OFF the power to the PLC before installing or removing the Unit.

8-3-4 Voltage/Current Switch

The analog conversion input can be switched from voltage input to current input by changing the pin settings on the voltage/current switch located on the back of the terminal block.

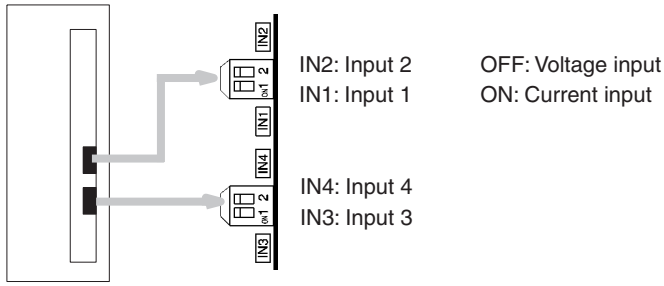

⚠ **Caution** Be sure to turn OFF the power to the PLC before mounting or removing the terminal block.

8-4 Wiring

8-4-1 Terminal Arrangement

The signal names corresponding to the connecting terminals are as shown in the following diagram.

Output 2 (+)	B1
Output 2 (–)	B2
Output 4 (+)	B3
Output 4 (–)	B4
N.C.	B5
Input 2 (+)	B6
Input 2 (–)	B7
AG	B8
Input 4 (+)	B9
Input 4 (–)	B10

A1	Output 1 (+)
A2	Output 1 (–)
A3	Output 3 (+)
A4	Output 3 (–)
A5	N.C.
A6	Input 1 (+)
A7	Input 1 (–)
A8	AG
A9	Input 3 (+)
A10	Input 3 (–)
A11	N.C.

Note

1. The analog I/O numbers that can be used are set in the Data Memory (DM).
2. The I/O signal ranges for individual inputs and outputs are set in the Data Memory (DM). They can be set in units of I/O numbers.
3. The AG terminal (A8, B8) is connected to the 0-V analog circuit in the Unit. Connecting shielded input lines can improve noise resistance.
4. The N.C. terminals (A5, A11, B5) are not connected to internal circuitry.

8-4-2 Internal Circuitry

The following diagrams show the internal circuitry of the analog I/O section.

Input Circuitry

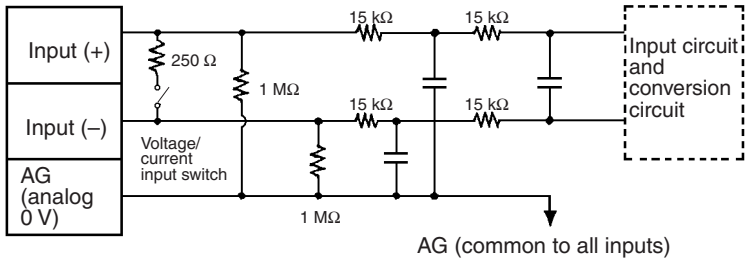

Output Circuitry

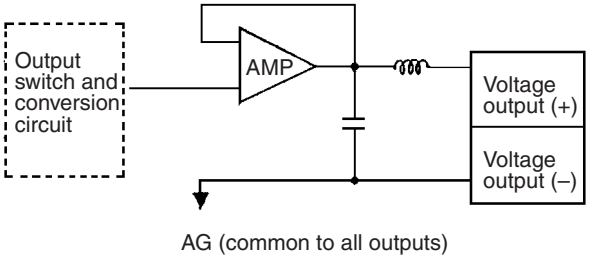

Internal Configuration

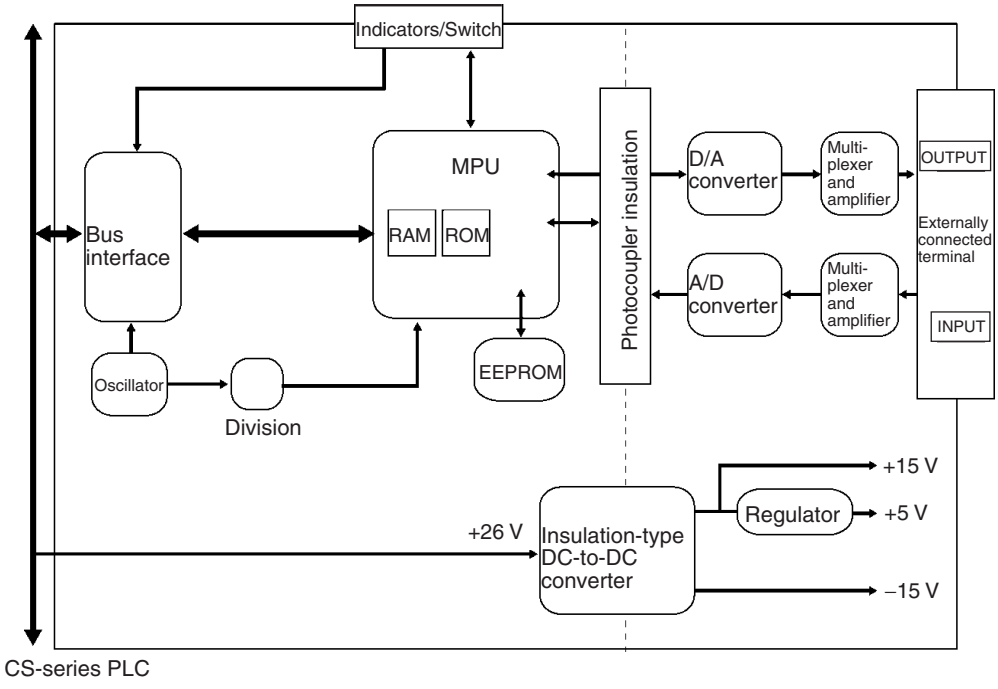

8-4-3 Voltage Input Disconnection

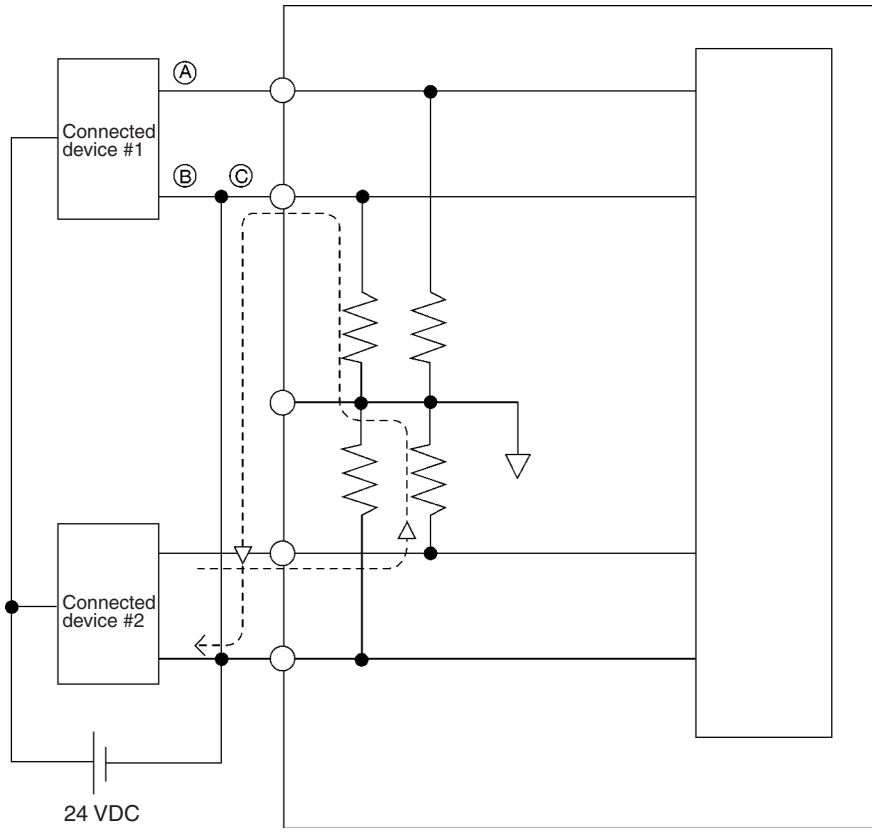

Note If the connected device #2 in the above example outputs 5 V and the power supply is shared by 2 channels as shown in the above diagram, approximately one third of the voltage, or 1.6 V, will be input at input 1.

When voltage inputs are used and a disconnection occurs, separate the power supply at the side of the connected devices or use an insulating device (isolator) for each input to avoid the following problems.

When the power supply at the connected devices is shared and section A or B is disconnected, power will flow in the direction of the broken line and the output voltage of the other connected devices will be reduced to between a third to a half of the voltage. If 1 to 5 V is used and the reduced voltage output, disconnection may not be detectable. If section C is disconnected, the power at the (–) input terminal will be shared and disconnection will not be detectable.

For current inputs, sharing the power supply between the connected devices will not cause any problems.

8-4-4 I/O Wiring Example

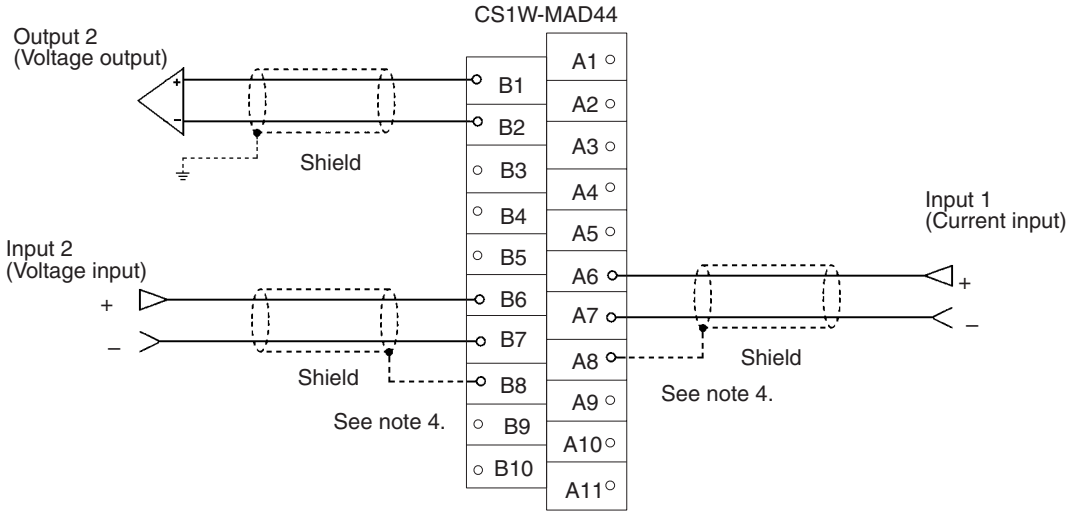

Note

1. When using current inputs, pins IN1 to IN4 of the voltage/current switch must be set to ON. Refer to *8-3-4 Voltage/Current Switch* for further details.
2. For inputs that are not used, either set to “0: Not used” in the input number settings (refer to *8-6-1 Input Settings and Conversion Values*) or short-circuit the voltage input terminals (V+) and (V–).
3. Crimp-type terminals must be used for terminal connections, and the screws must be tightened securely. Use M3 screws and tighten them to a torque of 0.5 N·m.
4. When connecting the shield of the analog input cables to the Unit’s AG terminals (A8, B8), as shown in the previous diagram, use a wire that is 30 cm max. in length if possible.

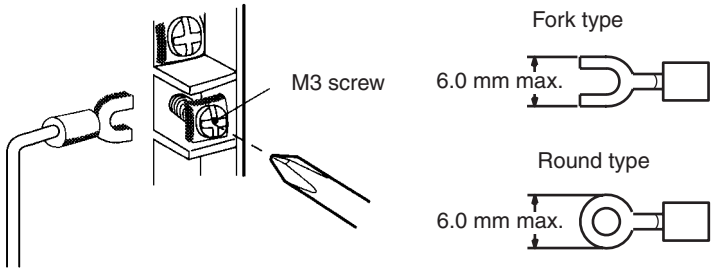

Connecting shielded cable to the Unit’s AG terminals (A8, B8) can improve noise resistance.

To minimize output wiring noise, ground the output signal line to the input device.

8-4-5 I/O Wiring Considerations

When wiring inputs, apply the following points to avoid noise interference and optimize Analog I/O Unit performance.

- Use two-core shielded twisted-pair cables for external connections.
- Route I/O cables separately from the AC cable, and do not run the Unit's cables near a main circuit cable or a high voltage cable. Do not insert output cables into the same duct.
- If there is noise interference from power lines (if, for example, the power supply is shared with electrical welding devices or electrical discharge machines, or if there is a high-frequency generation source nearby) install a noise filter at the power supply input area.

8-5 Exchanging Data with the CPU Unit

8-5-1 Outline of Data Exchange

Data is exchanged between the CPU Unit and the CS1W-MAD44 Analog I/O Unit via the Special I/O Unit Area (for data used to operate the Unit) and the Special I/O Unit DM Area (for data used for initial settings).

I/O Refresh Data

Analog input conversion values, analog output setting values, and other data used to operate the Unit are allocated in the Special I/O Unit Area of the CPU Unit according to the unit number, and are exchanged during I/O refreshing.

Fixed Data

The Unit's fixed data, such as the analog input signal ranges and analog output signal ranges, is allocated in the Special I/O Unit DM Area of the CPU Unit according to the unit number, and is exchanged when the power is turned ON or the Unit is restarted.

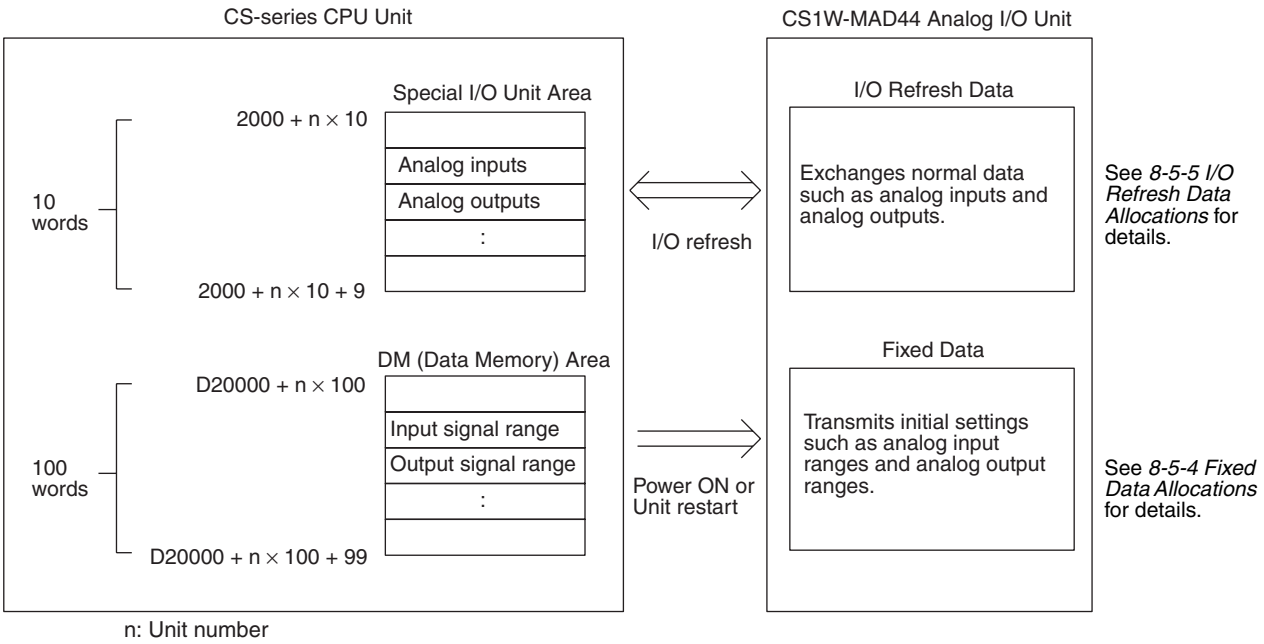

8-5-2 Unit Number Settings

The Special I/O Unit Area and Special I/O Unit DM Area word addresses that each Analog I/O Unit occupies are set by the unit number switches on the front panel of the Unit.

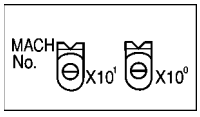

Switch setting	Unit number	Special/O Unit Area addresses	Special I/O Unit DM Area addresses
0	Unit #0	CIO 2000 to CIO 2009	D20000 to D20099
1	Unit #1	CIO 2010 to CIO 2019	D20100 to D20199
2	Unit #2	CIO 2020 to CIO 2029	D20200 to D20299
3	Unit #3	CIO 2030 to CIO 2039	D20300 to D20399
4	Unit #4	CIO 2040 to CIO 2049	D20400 to D20499
5	Unit #5	CIO 2050 to CIO 2059	D20500 to D20599
6	Unit #6	CIO 2060 to CIO 2069	D20600 to D20699
7	Unit #7	CIO 2070 to CIO 2079	D20700 to D20799
8	Unit #8	CIO 2080 to CIO 2089	D20800 to D20899
9	Unit #9	CIO 2090 to CIO 2099	D20900 to D20999
10	Unit #10	CIO 2100 to CIO 2109	D21000 to D21099
to	to	to	to
n	Unit #n	CIO 2000 + (n × 10) to CIO 2000 + (n × 10) + 9	D20000 + (n × 100) to D20000 + (n × 100) + 99
to	to	to	to
95	Unit #95	CIO 2950 to CIO 2959	D29500 to D29599

Note If two or more Special I/O Units are assigned the same unit number, a “UNIT No. DPL ERR” error (in the Programming Console) will be generated (A40113 will turn ON) and the PLC will not operate.

8-5-3 Special I/O Unit Restart Bits

To restart the Unit operations after changing the contents of the data memory or correcting an error, turn ON the power to the PLC again or turn the Special I/O Unit Restart Bit ON and then OFF again.

Special I/O Unit Area word address	Function	
A50200	Unit No. 0 Restart Bit	Restarts the Unit when turned ON and then OFF again.
A50201	Unit No. 1 Restart Bit	
to	to	
A50215	Unit No. 15 Restart Bit	
A50300	Unit No. 16 Restart Bit	
to	to	
A50715	Unit No. 95 Restart Bit	

Note If the error is not corrected by restarting the Unit or turning the Special I/O Unit Restart Bit ON and then OFF again, replace the Analog I/O Unit.

8-5-4 Fixed Data Allocations

Allocations in DM Area

The initial settings of the Analog I/O Unit are set according to the data allocated in the Special I/O Unit DM Area. Settings, such as the inputs and outputs used, the analog input signal range, and analog output signal range must be set in this area.

SYSMAC CS-series CPU Unit

(Special I/O Unit DM Area)

	Word
Unit #0	D20000 to D20099
Unit #1	D20100 to D20199
Unit #2	D20200 to D20299
Unit #3	D20300 to D20399
Unit #4	D20400 to D20499
Unit #5	D20500 to D20599
Unit #6	D20600 to D20699
Unit #7	D20700 to D20799
Unit #8	D20800 to D20899
Unit #9	D20900 to D20999
Unit #10	D21000 to D21099
to	to
Unit #n	D20000 + (n × 100) to D20000 + (n × 100) + 99
to	to
Unit #95	D29500 to D29599

Data is automatically transferred to each unit number when the power is turned ON, or when the Special I/O Unit Restart Bit is turned ON.

CS1W-MAD44 Analog I/O Unit

(Fixed Data Area)

D (m)	I/O conversion permission loop mode setting
D (m+1)	I/O signal range
D (m+2 to m+5)	Output hold function setting
D (m+6 to m+9)	Sets number of samples for mean value processing
D (m+10 to m+17)	Ratio set value, bias value setting

m = 20000 + (unit number × 100)

Note

1. The Special I/O Unit DM Area words that are occupied by the Analog I/O Unit are set using the unit number switches on the front panel of the Unit. Refer to *8-3-2 Unit Number Switches* for details on the method used to set the unit number switches.
2. If two or more Special I/O Units are assigned the same unit number, a “UNIT No. DPL ERR” error (in the Programming Console) will be generated (A40113 will turn ON) and the PLC will not operate.

Allocations in DM Area

The following table shows the allocation of DM words and bits for both normal and adjustment mode.

DM word	Bits															
	15	14	13	12	11	10	9	8	7	6	5	4	3	2	1	0
D (m)	Ratio conversion use setting								Input use setting				Output use setting			
	Loop 4		Loop 3		Loop 2		Loop 1		Input 4	Input 3	Input 2	Input 1	Out-put 4	Out-put 3	Out-put 2	Out-put 1
D (m+1)	Input signal range setting								Output signal range setting							
	Input 4		Input 3		Input 2		Input 1		Output 4		Output 3		Output 2		Output 1	
D (m+2)	Not used.								Output 1: Output status when conversion stopped							
D (m+3)	Not used.								Output 2: Output status when conversion stopped							
D (m+4)	Not used.								Output 3: Output status when conversion stopped							
D (m+5)	Not used.								Output 4: Output status when conversion stopped							
D (m+6)	Input 1: Mean value processing setting															
D (m+7)	Input 2: Mean value processing setting															
D (m+8)	Input 3: Mean value processing setting															
D (m+9)	Input 4: Mean value processing setting															
D (m+10)	Loop 1 (input 1 to output 1), A constant															
D (m+11)	Loop 1 (input 1 to output 1), B constant															
D (m+12)	Loop 2 (input 2 to output 2), A constant															
D (m+13)	Loop 2 (input 2 to output 2), B constant															
D (m+14)	Loop 3 (input 3 to output 3), A constant															
D (m+15)	Loop 3 (input 3 to output 3), B constant															
D (m+16)	Loop 4 (input 4 to output 4), A constant															
D (m+17)	Loop 4 (input 4 to output 4), B constant															

Note For the DM word addresses, m = D20000 + (unit number × 100).

Set Values and Stored Values

Item		Contents	Page
Input	Use setting	0: Not used. 1: Used.	332
	Input signal range	00: –10 to 10 V 01: 0 to 10 V 10: 1 to 5 V/4 to 20 mA (See note 1.) 11: 0 to 5 V	333
	Mean value processing setting	0000: Mean value processing for 2 buffers (See note 3.) 0001: No mean value processing 0002: Mean value processing for 4 buffers 0003: Mean value processing for 8 buffers 0004: Mean value processing for 16 buffers 0005: Mean value processing for 32 buffers 0006: Mean value processing for 64 buffers	334
Output	Use setting	0: Not used. 1: Used.	339
	Output signal range	00: –10 to 10 V 01: 0 to 10 V 10: 1 to 5 V 11: 0 to 5 V	339
	Output status when stopped	00: CLR Outputs 0 or minimum value of each range. (See note 2.) 01: HOLD Holds output just before stopping. 02: MAX Outputs maximum value of range.	341
Loop	Ratio conversion use setting	00: Not used. 01: Uses positive gradient conversion. 10: Uses negative gradient conversion. 11: Same as for setting “00” above.	342
	A constant	4 digits BCD (0 to 9999)	
	B constant	16-bit binary data	

Note

1. The input signal range of “1 to 5 V” and “4 to 20 mA” is switched using the pins of the voltage/current switch. Refer to *8-3-4 Voltage/Current Switch* for details.
2. For the range of ±10 V, the output is 0 V. For other output signal ranges, the minimum value of each signal range is output. Refer to *8-7-2 Output Hold Function* for details.
3. The default of mean value processing setting is set to “Mean value processing with 2 buffers.” Refer to *8-6-2 Mean Value Processing*.

8-5-5 I/O Refresh Data Allocations

Special I/O Unit Area Allocation and Contents

I/O refresh data for the Analog I/O Unit is exchanged according to the allocations in the Special I/O Unit Area. Analog input converted values and analog output set values are exchanged with the CPU Unit at I/O refresh.

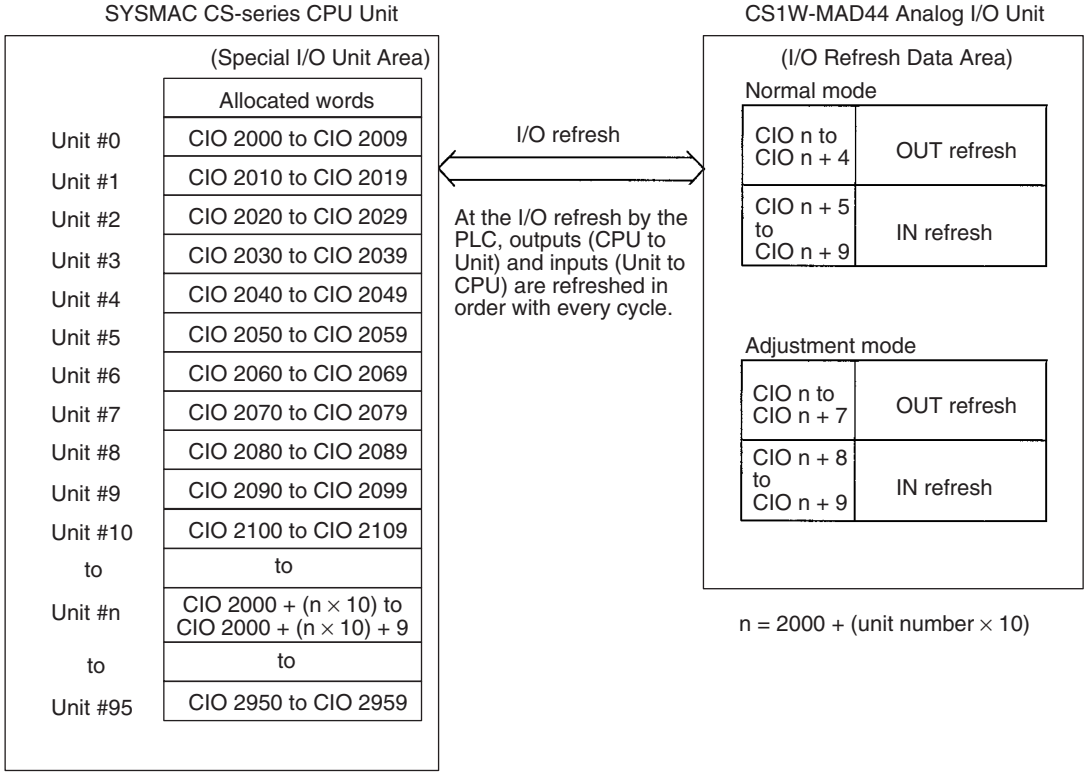

Note

1. The Special I/O Unit Area words that are occupied by the Analog I/O Unit are set using the unit number switches on the front panel of the Unit. Refer to *8-3-2 Unit Number Switches* for details on the method used to set the unit number switches.
2. If two or more Special I/O Units are assigned the same unit number, a “UNIT No. DPL ERR” error (in the Programming Console) will be generated (A40113 will turn ON) and the PLC will not operate.

Allocations for Normal Mode

For normal mode, set the operation mode switch on the rear panel of the Unit as shown in the following diagram.

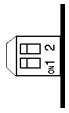

The allocation of words and bits in the CIO Area is shown in the following table.

I/O	Word	Bits															
		15	14	13	12	11	10	9	8	7	6	5	4	3	2	1	0
Output (CPU to Unit)	n	Not used.								Peak value hold				Conversion enable			
										Input 4	Input 3	Input 2	Input 1	Output 4	Output 3	Output 2	Output 1
	n + 1	Output 1 set value															
		16^3				16^2				16^1				16^0			
	n + 2	Output 2 set value															
	n + 3	Output 3 set value															
	n + 4	Output 4 set value															
Input (Unit to CPU)	n + 5	Input 1 conversion value / Loop 1 calculation result															
		16^3				16^2				16^1				16^0			
	n + 6	Input 2 conversion value / Loop 2 calculation result															
	n + 7	Input 3 conversion value / Loop 3 calculation result															
	n + 8	Input 4 conversion value / Loop 4 calculation result															
	n + 9	Alarm Flags								Disconnection detection				Output setting error			
										Input 4	Input 3	Input 2	Input 1	Output 4	Output 3	Output 2	Output 1

Set Values and Stored Values

I/O	Item	Contents	Page
Input	Peak value hold function	0: Not used. 1: Peak value hold used.	337
	Conversion value Calculation result	16-bit binary data	333
	Disconnection detection	0: No disconnection 1: Disconnection	338
Output	Conversion enable	0: Conversion output stopped. 1: Conversion output begun.	340
	Set value	16-bit binary data	340
	Output setting error	0: No error 1: Output setting error	342
Common	Alarm Flags	Bits 00 to 03: Output set value error Bits 04 to 07: Input disconnection detection Bit 08: Ratio conversion use setting error Bit 09: Ratio set value error Bit 10: Output hold setting error Bit 11: Mean value processing setting error Bit 15: Operating in adjustment mode (always 0 in normal mode)	363 364

Note For the CIO word addresses, n = CIO 2000 + unit number × 10.

The input disconnection detection function can be used when the input signal range is set for 1 to 5 V (4 to 20 mA).

Input signal range	Voltage/current
1 to 5 V	0.3 V max.
4 to 20 mA	1.2 mA max.

Allocation for Adjustment Mode

For adjustment mode, set the operation mode switch on the rear panel of the Unit as shown in the following diagram. When the Unit is set for adjustment mode, the ADJ indicator on the front panel of the Unit will flash.

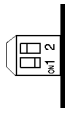

The allocation of CIO words and bits is shown in the following table.

I/O	Word	Bits															
		15	14	13	12	11	10	9	8	7	6	5	4	3	2	1	0
Output (CPU to Unit)	n	Not used.								Inputs and outputs to be adjusted							
										16^1				16^0			
	n + 1	Not used.								Not used.		Clr	Set	Up	Down	Gain	Off-set
	n + 2	Not used.															
	n + 3	Not used.															
	n + 4	Not used.															
	n + 5	Not used.															
	n + 6	Not used.															
	n + 7	Not used.															
Input (Unit to CPU)	n + 8	Conversion value or set value at time of adjustment															
		16^3				16^2				16^1				16^0			
	n + 9	Alarm Flags								Disconnection detec-tion				Not used.			
										Input 4	Input 3	Input 2	Input 1				

Set Values and Stored Values

Refer to *8-9-1 Adjustment Mode Operational Flow* for further details.

Item	Contents
Input or output to be adjusted	Sets input or output to be adjusted. Leftmost digit: 1 (output) or 2 (input) Rightmost digit: 1 to 4
Offset (Offset Bit)	When ON, adjusts offset error.
Gain (Gain Bit)	When ON, adjusts gain error.
Down (Down Bit)	Decrements the adjustment value while ON.
Up (Up Bit)	Increments the adjustment value while ON.
Set (Set Bit)	Sets adjusted value and writes to EEPROM.
Clr (Clear Bit)	Clears adjusted value. (Returns to default status)
Conversion value for adjustment	The conversion value for adjustment is stored as 16 bits of binary data.

Item	Contents
Disconnection detection	0: No disconnection 1: Disconnection
Alarm Flags	Bit 12: Input value is outside adjustment limits (in adjustment mode) Bit 13: I/O number setting error (in adjustment mode) Bit 14: EEPROM write error (in adjustment mode) Bit 15: Operating in adjustment mode (always 1 in adjustment mode)

Note For the CIO word addresses, n = CIO 2000 + (unit number × 10).

The input disconnection detection function can be used when the input signal range is set for 1 to 5 V (4 to 20 mA).

Input signal range	Voltage/current
1 to 5 V	0.3 V max.
4 to 20 mA	1.2 mA max.

8-6 Analog Input Functions and Operating Procedures

8-6-1 Input Settings and Conversion Values

Setting Inputs and Signal Ranges

Input Numbers

The Analog I/O Unit converts only analog inputs specified by input numbers 1 to 4. To specify the analog inputs to be used, turn ON from a Programming Device the D(m) bits in the DM Area shown in the following diagram.

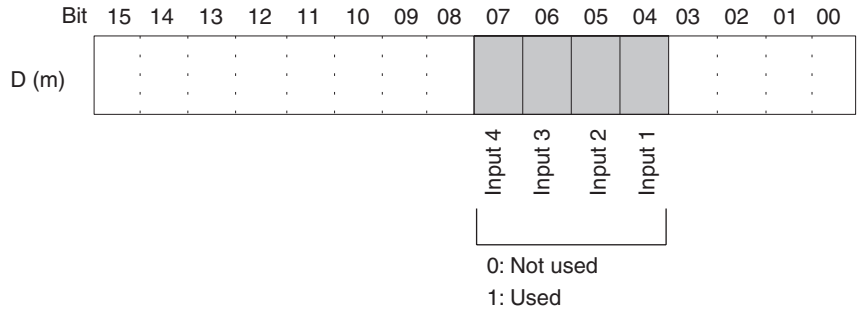

The analog input sampling interval can be shortened by setting any unused input numbers to 0.

Sampling interval = (1 ms) × (Number of inputs used)

For the DM word addresses, m = D20000 + (unit number × 100)

The word for inputs that have been set to “Not used” will always be “0000.”

Input Signal Range

Any of four types of input signal range (–10 to 10 V, 0 to 10 V, 1 to 5 V, and 4 to 20 mA) can be selected for each of the inputs (i.e., input numbers 1 to 4). To specify the input signal range for each input, set from a Programming Device the D(m+1) bits in the DM Area as shown in the following diagram.

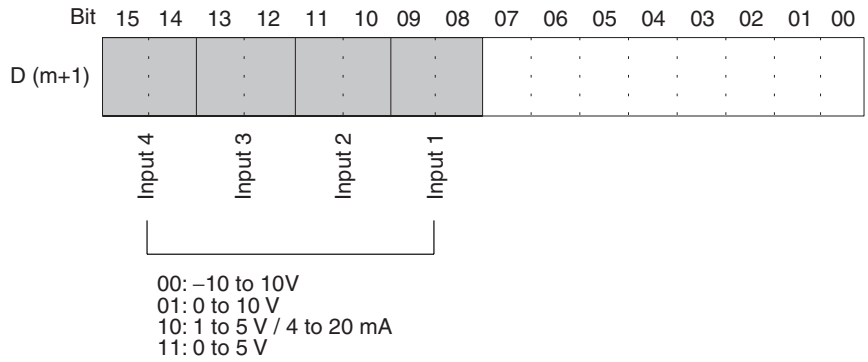

Note

1. For the DM word addresses, m = D20000 + (unit number × 100)
2. The input signal range of “1 to 5 V” or “4 to 20 mA” is switched using the voltage/current switch.
3. After making the DM settings from a Programming Device, it will be necessary to either turn the power to the PLC OFF and ON, or turn ON the Special I/O Unit Restart Bit in order to transfer the contents of the DM settings to the Special I/O Unit.

Reading Conversion Values

Analog input conversion values are stored for each input number, in CIO words n+5 to n+8.

Word	Function	Stored value
n+5	Input 1 conversion value	16-bit binary data
n+6	Input 2 conversion value	
n+7	Input 3 conversion value	
n+8	Input 4 conversion value	

Note For the CIO word addresses, n = CIO 2000 + (unit number × 10).

Use MOV(021) or XFER(070) to read conversion values in the user program.

Example 1

In this example, the conversion data from only one input is read. (The unit number is 0.)

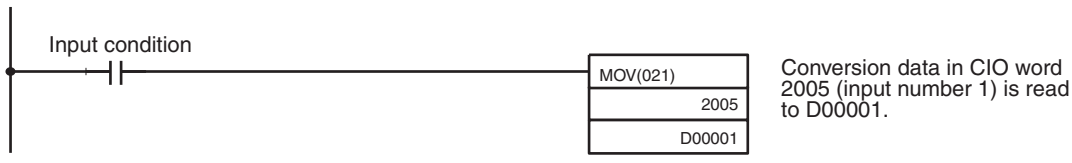

Example 2

In this example, the conversion data from multiple inputs is read. (The unit number is 0.)

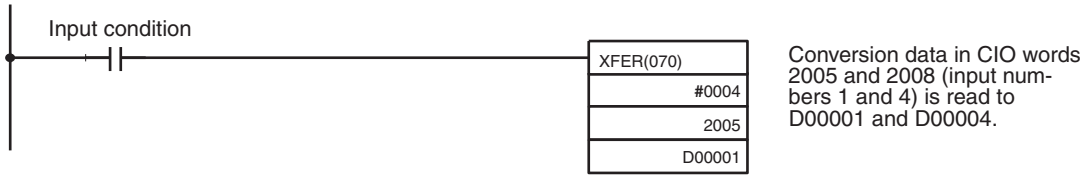

For details regarding conversion value scaling, refer to *Scaling* on page 448.

8-6-2 Mean Value Processing

The Analog I/O Unit can compute the mean value of the conversion values of analog inputs that have been previously sampled. Mean value processing involves an operational mean value in the history buffers, so it has no effect on the data refresh cycle. (The number of history buffers that can be set to use mean value processing is 2, 4, 8, 16, 32, or 64.)

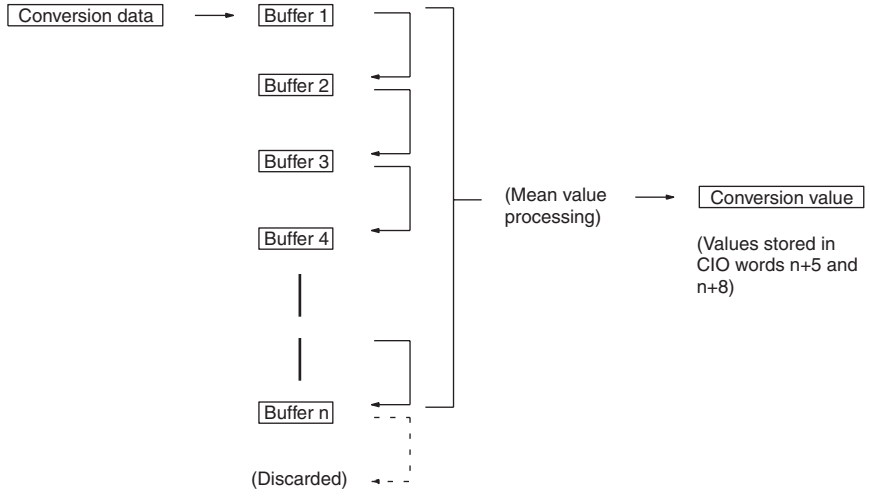

When “n” number of history buffers are being used, the first conversion data will be stored for all “n” number of history buffers immediately after data conversion has begun or after a disconnection is restored.

When mean value processing is used together with the peak value hold function, the mean value will be held.

To specify whether or not mean value processing is to be used, and to specify the number of history buffers for mean data processing, use a Programming Device to make the settings in D(m+6) to D(m+9) as shown in the following table.

DM word	Function	Set value
D (m+6)	Input 1 mean value processing	0000: Mean value processing with 2 buffers 0001: No mean value processing 0002: Mean value processing with 4 buffers 0003: Mean value processing with 8 buffers 0004: Mean value processing with 16 buffers 0005: Mean value processing with 32 buffers 0006: Mean value processing with 64 buffers
D (m+7)	Input 2 mean value processing	
D (m+8)	Input 3 mean value processing	
D (m+9)	Input 4 mean value processing	

For the DM word addresses, m = D20000 + (unit number × 100)

Note After making the DM settings from a Programming Device, it will be necessary to either turn the power to the PLC OFF and ON, or turn ON the Special I/O Unit Restart Bit to transfer the contents of the DM settings to the Special I/O Unit.

The history buffer moving average is calculated as shown below. (In this example, there are four buffers.)

1,2,3...

1. With the first cycle, Data 1 is stored in all the history buffers.

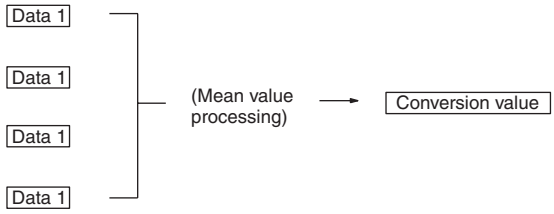

Mean value = (Data 1 + Data 1 + Data 1 + Data 1) ÷ 4

2. With the second cycle, Data 2 is stored in the first history buffer.

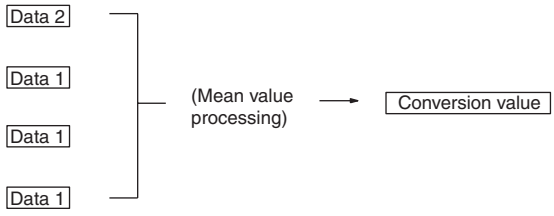

Mean value = (Data 2 + Data 1 + Data 1 + Data 1) ÷ 4

3. With the third cycle, Data 3 is stored in the first history buffer.

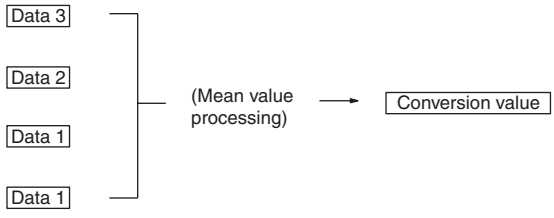

Mean value = (Data 3 + Data 2 + Data 1 + Data 1) ÷ 4

4. With the fourth cycle, the Data 4 is stored in the first history buffer.

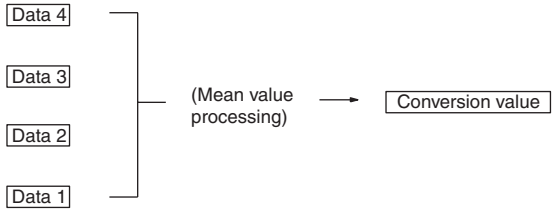

Mean value = (Data 4 + Data 3 + Data 2 + Data 1) ÷ 4

5. With the fifth cycle, Data 5 is stored in the first history buffer.

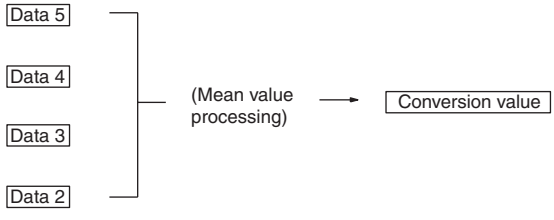

Mean value = (Data 5 + Data 4 + Data 3 + Data 2) ÷ 4

When a disconnection is restored, the mean value processing function begins again from step 1.

Note

1. The default setting for mean value processing in the Analog I/O Unit is mean value processing with 2 buffers. When the mean value processing

function is used, the delay in refreshing converted data for input signal changes will be as shown in the following diagram.

2. Specify “no mean value processing” to follow conversion of a rapid change in input signals.

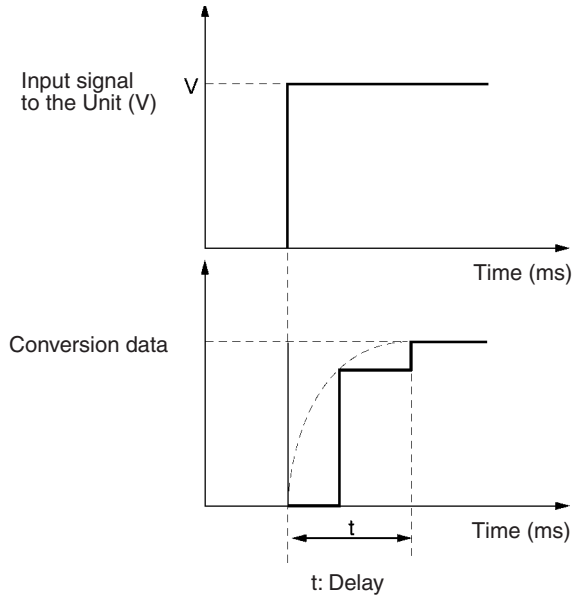

For V = 20 V (–10 to 10 V)

Using One Word

t = n + (2 to 3)

Using m Words (1 ≤ m ≤ 8)

No averaging (n = 1) or two averaging buffers (n = 2):
t = n x (m + 2)

n averaging buffers (4 ≤ n ≤ 64):
t = (n – 2) x m + 10.5

Response Time

Unit: ms

m	n						
	64	**32**	**16**	**8**	**4**	**2**	**1**
4	258.5	130.5	66.5	34.5	18.5	12	6
3	196.5	100.5	52.5	28.5	16.5	10	5
2	134.5	70.5	38.5	22.5	14.5	8	4
1	67	35	19	11	7	5	3

Symbols

m: Number of input words used in DM Area
n: Average number of buffers set for the input number for which to find the response time

Calculation Example

The following example calculations are for a resolution of 8,000 with an application using inputs 1 and 4, 64 averaging buffers set for input 1, and no averaging set for input 4.

- Response time for input 1: t = {(64 – 2) × 2 + 10.5} = 134.5 (ms)
- Response time for input 1: t = 1 × (2 + 2) = 4 (ms)

8-6-3 Peak Value Hold Function

The peak value hold function holds the maximum digital conversion value for every input (including mean value processing). This function can be used with analog input. The following diagram shows how digital conversion values are affected when the peak value hold function is used.

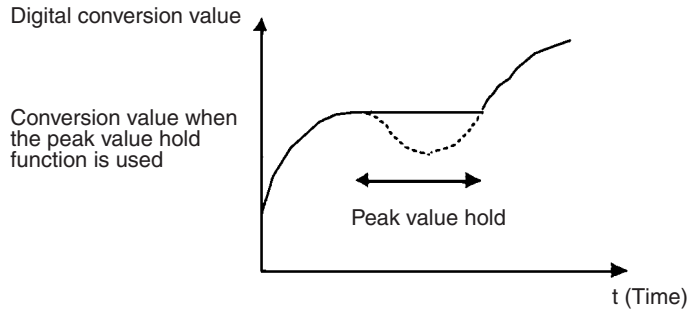

The peak value hold function can be set individually for each input number by turning on the respective bits (04 to 07) in CIO word n.

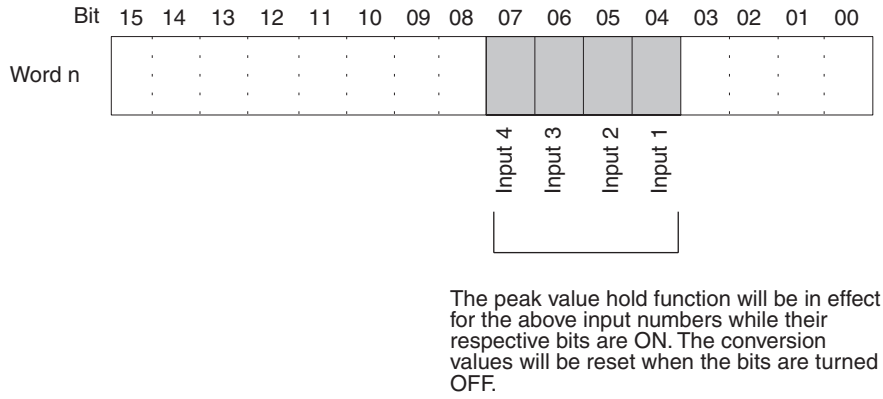

For the CIO word addresses, n = CIO 2000 + (unit number × 10).

In the following example, the peak value hold function is in effect for input number 1, and the unit number is 0.

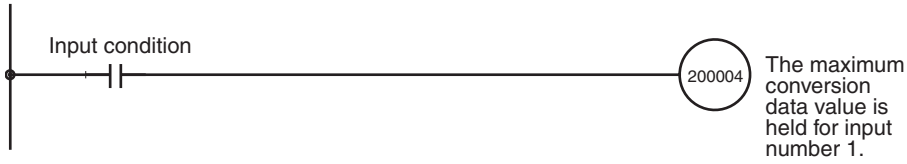

When mean value processing is used together with the peak value hold function, the mean value will be held.

As long as the peak value hold function is in effect, the peak value hold will be held even in the event of a disconnection.

When the load to the CPU Unit is disconnected, the Peak Value Hold Bits (bits 04 to 07 of the word n) are cleared and the peak value hold function is disabled.

8-6-4 Input Disconnection Detection Function

When an input signal range of 1 to 5 V (4 to 20 mA) is used, input circuit disconnections can be detected. The detection conditions for each of the input signal ranges are shown in the following table.

Range	Current/voltage
1 to 5 V	0.3 V max.
4 to 20 mA	1.2 mA max.

The current/voltage level will fluctuate according to the offset/gain adjustment.

The input disconnection detection signals for each input number are stored in bits 04 to 07 of CIO word n+9. Specify these bits as execution conditions to use disconnection detection in the user's program.

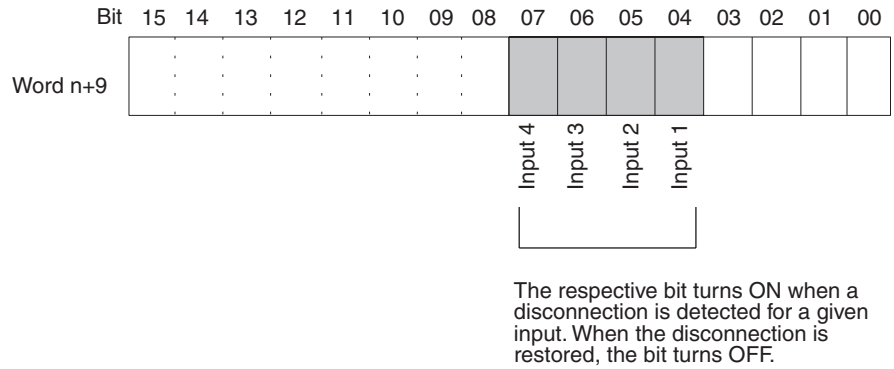

For the CIO word addresses, n = CIO 2000 + (unit number × 10).

The conversion value during a disconnection will be 0000.

In the following example, the conversion value is read only if there is no disconnection at analog input number 1. (The unit number is 0.)

8-7 Analog Output Functions and Operating Procedures

8-7-1 Output Settings and Conversions

Setting Outputs and Signal Ranges

Output Numbers

The Analog I/O Unit converts analog outputs specified by output numbers 1 to 4 only. To specify the analog outputs to be used, turn ON from a Programming Device the D(m) bits in the DM Area shown in the following diagram.

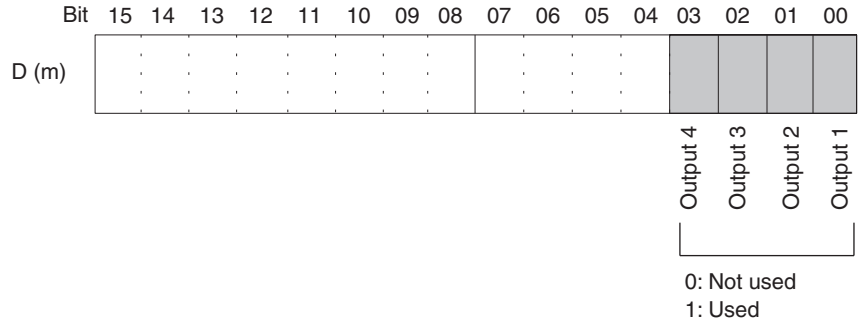

The analog output conversion cycle can be shortened by setting any unused output numbers to 0.

Conversion cycle = (1 ms) × (Number of outputs used)

Note
1. For the DM word addresses, m = D20000 + (unit number × 100).
2. Output numbers not used (set to 0) will be output at 0 V.

Output Signal Range

Any of four types of output signal range (–10 to 10 V, 0 to 10 V, 1 to 5 V, and 0 to 5 V) can be selected for each of the outputs (i.e., output numbers 1 to 4). To specify the output signal range for each output, use a Programming Device to set the D(m+1) bits in the DM Area shown in the following diagram.

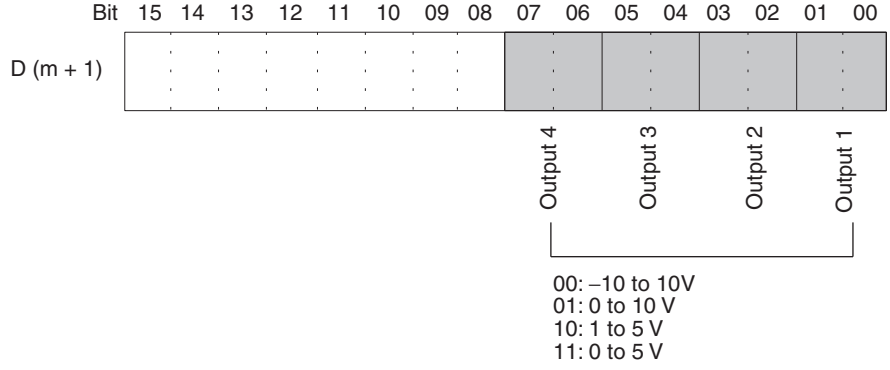

Note
1. For the DM word addresses, m = D20000 + (unit number × 100).
2. After making the DM settings from a Programming Device, it will be necessary to either turn the power to the PLC OFF and ON, or turn ON the Special I/O Unit Restart Bit to transfer the contents of the DM settings to the Special I/O Unit.

Writing Set Values

Analog output set values are written to CIO words (n+1) to (n+4).

Word	Function	Stored value
n+1	Output 1 set value	16-bit binary data
n+2	Output 2 set value	
n+3	Output 3 set value	
n+4	Output 4 set value	

For the CIO word addresses, n = CIO 2000 + (unit number × 10).

Use MOV(021) or XFER(070) to write values in the user program.

Example 1

In this example, the set value from only one input is read. (The unit number is 0.)

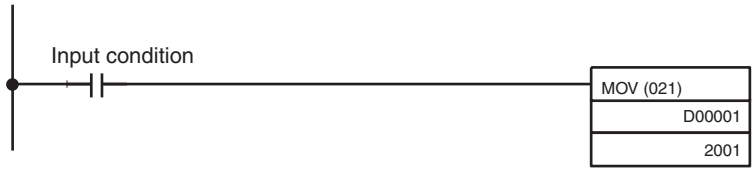

The set value stored in D 00001 is written to CIO word 2001 (output number 1).

Example 2

In this example, multiple set values are written. (The unit number is #0.)

The set values stored in D 00001 to D 00004 are written to CIO words 2001 to 2004 (outputs 1 to 4).

Note If the set value has been written outside the specified range, an output setting error will occur, and the value set by the output hold function will be output.

Starting and Stopping Conversion

To begin analog output conversion, turn ON the corresponding Conversion Enable Bit (word n, bits 00 to 03) from the user's program.

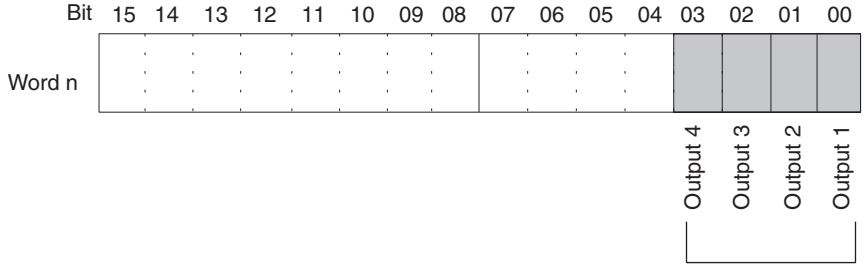

Analog conversion is executed while these bits are ON. When the bits are turned OFF, the conversion is stopped and the output data is held.

For the CIO word addresses, n = CIO 2000 + (unit number × 10).

The analog output when conversion is stopped will differ depending on the output signal range setting and output hold setting. Refer to *Setting Outputs and Signal Ranges* on page 339 and *8-7-2 Output Hold Function*.

Conversion will not begin under the following conditions even if the Conversion Enable Bit is turned ON. Refer to *8-7-2 Output Hold Function*.

1,2,3...

1. In adjustment mode, when something other than the output number is output during adjustment.
2. When there is an output setting error.

3. When a fatal error occurs at the PLC.
4. When there is an input disconnection during a ratio conversion.

When the operation mode for the CPU Unit is changed from RUN or MONITOR mode to PROGRAM mode, or when the power is turned ON, the Conversion Enable Bits will all turn OFF. The output status at this time depends on the output hold function.

In this example, conversion is begun for analog output number 1. (The unit number is 0.)

8-7-2 Output Hold Function

The Analog I/O Unit stops conversion under the following circumstances and outputs the value set by the output hold function.

1,2,3...

1. When the Conversion Enable Bit is OFF. Refer to *Starting and Stopping Conversion* on page 340.
2. In adjustment mode, when something other than the output number is output during adjustment. Refer to *8-9-2 Input Offset and Gain Adjustment Procedures*.
3. When there is an output setting error. Refer to *8-7-3 Output Setting Errors*.
4. When a fatal error occurs at the PLC.
5. When there is an input disconnection during ratio conversion.
6. When there is an I/O bus error.
7. When the CPU Unit is in LOAD OFF status.
8. When there is a WDT (watchdog timer) error in the CPU Unit.

CLR, HOLD, or MAX can be selected for the output status when conversion is stopped.

Output signal range	CLR	HOLD	MAX
0 to 10 V	–0.5 V (Min. –5% of full scale)	Voltage that was output just prior to stop.	10.5 V (Max. +5% of full scale)
–10 to 10 V	0.0 V	Voltage that was output just prior to stop.	11.0 V (Max. +5% of full scale)
1 to 5 V	0.8 V (Min. –5% of full scale)	Voltage that was output just prior to stop.	5.2 V (Max. +5% of full scale)
0 to 5 V	–0.25 V (Min. –5% of full scale)	Voltage that was output just prior to stop.	5.25 V (Max. +5% of full scale)

The above values may fluctuate if offset/gain adjustment has been applied.

To specify the output hold function, use a Programming Device to set the DM Area words D (m+2) to D (m+5) as shown in the following table.

DM word	Function	Set value
D (m+2)	Output 1: Output status when stopped	xx00: CLR Output 0 or minimum value of range (–5%). xx01: HOLD Hold output value prior to stop. xx02: MAX Output maximum value of range (105%). Set any value in the leftmost bytes (xx).
D (m+3)	Output 2: Output status when stopped	
D (m+4)	Output 3: Output status when stopped	
D (m+5)	Output 4: Output status when stopped	

For the DM word addresses, m = D20000 + (unit number × 100).

Note After specifying the DM settings from a Programming Device, it will be necessary to either turn the power to the PLC OFF and ON, or turn ON the Special I/O Unit Restart Bit to transfer the contents of the DM settings to the Special I/O Unit.

8-7-3 Output Setting Errors

If the analog output set value is greater than the specified range, a setting error signal will be stored in CIO word n+9 (bits 00 to 03).

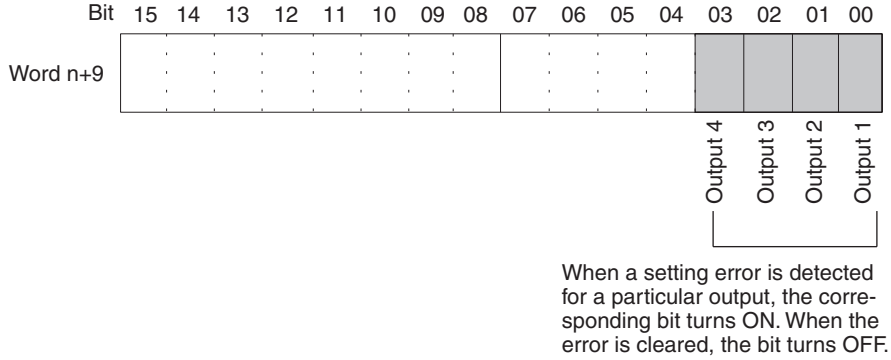

For the CIO word addresses, n = CIO 2000 + (unit number × 10).

The voltage for an output number at which a setting error has occurred will be output according to the output hold function.

8-8 Ratio Conversion Function

The Analog I/O Unit has a ratio conversion function that enables it to perform analog-to-analog conversions by itself, without utilizing the PLC. It can use either Loop 1 (input number 1 → output number 1), Loop 2 (input number 2 → output number 2), Loop 3 (input number 3 → output number 3), or Loop 4 (input number 4 → output number 4).

Input 1 → Ratio bias calculation → Output 1

Input 2 → Ratio bias calculation → Output 2

Input 3 → Ratio bias calculation → Output 3

Input 4 → Ratio bias calculation → Output 4

The relationship between the analog input and the analog output is expressed by the following conversion equations.

Positive Gradient Conversion

(Analog output) = A × (Analog input) + B

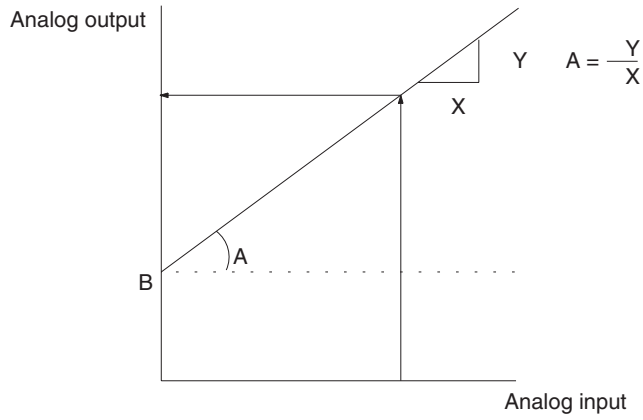

A: Ratio set value 0 to 99.99 (BCD)
B: Bias 8000 to 7FFF (16-bit binary data)

The following example is for an I/O range of –10 to 10 V.

Constant A: 0050 (0.5)
Constant B: 0190 (2.0 V)

Analog input: –10 to 10 V
Analog output = 0.5 × (–10 to 10 V) + 2.0 V
= –3.0 to 7.0 V

Negative Gradient Conversion

(Analog output) = F – A x (Analog input) + B

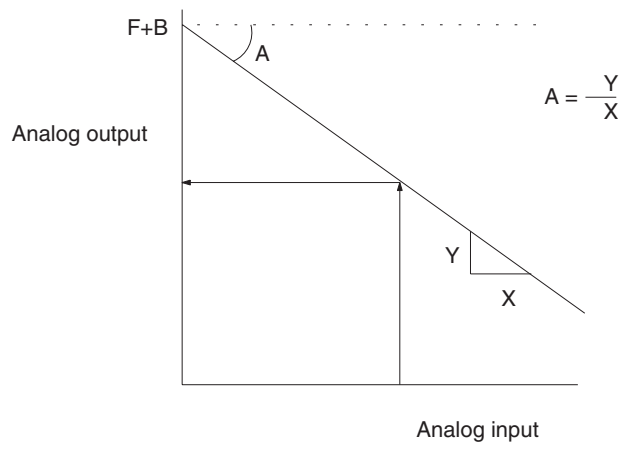

F: Output range maximum value
A: Ratio set value 0 to 99.99 (BCD)
B: Bias 8000 to 7FFF (16-bit binary data)

The following example is for an I/O range of 0 to 10 V.

Constant A: 1000 (10.0)
Constant B: 0068 (0.5 V)
F: 10 V (output range maximum value)
Analog input: 0 to 1 V
Analog output = 10 V – 10 × (0 to 1 V) + 0.5 V
= 10.5 to 0.5 V

Specifying Ratio Conversion Function

To specify the use of Loop 1 to Loop 4 and their I/O relationships, set bits 08 to 15 of DM Area word D (m) as shown in the following diagram.

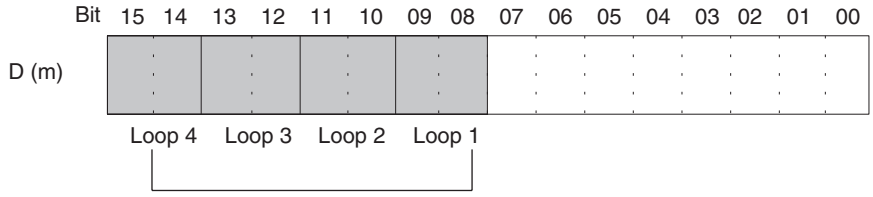

00: Not used.
01: Uses positive gradient conversion.
10: Uses negative gradient conversion.
11: Same as 10 above.

The response time of ratio conversion (input-to-output conversion) is 0.7 ms.

For the DM word addresses, m = D20000 + (unit number × 100).

Specifying Ratio Set Value and Bias

The ratio set value (A) and the bias (B) are set in the DM words from D (m+10) to D (m+17).

DM word	Function	Set value
D (m+10)	Loop 1 (input 1 → output 1), A constant	BCD 0 to 9999 (0.00 to 99.99; unit: 0.01)
D (m+11)	Loop 1 (input 1 → output 1), B constant	16-bit binary data
D (m+12)	Loop 2 (input 2 → output 2), A constant	BCD 0 to 9999 (0.00 to 99.99; unit: 0.01)
D (m+13)	Loop 2 (input 2 → output 2), B constant	16-bit binary data
D (m+14)	Loop 3 (input 3 → output 3), A constant	BCD 0 to 9999 (0.00 to 99.99; unit: 0.01)
D (m+15)	Loop 3 (input 3 → output 3), B constant	16-bit binary data
D (m+16)	Loop 4 (input 4 → output 4), A constant	BCD 0 to 9999 (0.00 to 99.99; unit: 0.01)
D (m+17)	Loop 4 (input 4 → output 4), B constant	16-bit binary data

For the DM word addresses, m = D20000 + (unit number x 100).

Note

1. After making the DM settings from a Programming Device, it will be necessary to either turn the power to the PLC OFF and ON, or turn ON the Special I/O Unit Restart Bit to transfer the contents of the DM settings to the Special I/O Unit. For details regarding the Special I/O Unit Restart Bit, refer to *8-10-4 Restarting Special I/O Units*.
2. The calculation results will be output in digital values to word n+5 (Loop 1), word n+6 (Loop 2), word n+7 (Loop 3). and word n+8 (Loop 4).
3. If an input cable is disconnected, the calculation value will become 0000, and the analog output value will be output according to the output hold function.
4. If the output value exceeds the specified signal range due to the ratio conversion of the digital input value, the calculation result and analog output will be given as the lower-limit or upper-limit value.

8-9 Adjusting Offset and Gain

These functions can be used to calibrate inputs or outputs according to the devices that are connected.

Input Calibration Function

This function takes an output device's offset voltage (or current) and gain voltage (or current) as the analog input conversion data 0000 and 0FA0 (or 07D0 when the range is ±10 V). For example, when used in a range of 1 to 5 V, a range of 0.8 to 4.8 V may be output even if the external device specifications are for 1 to 5 V. In such cases, when the external device outputs an offset voltage of 0.8 V, the converted data at the Analog Input Unit will be FF38. When a gain voltage of 4.8 V is output, the converted data will be 0EDA. With the offset and gain adjustment functions, when 0.8 V and 4.8 V are input, then the values are converted to 0000 and 0FA0 respectively (instead of FF38 and 0EDA).

Output device offset and gain voltage	Converted data before adjustment	Converted data after adjustment
0.8 V	FF38	0000
4.8 V	0EDA	0FA0

Input Calibration Function

This function adjusts output voltages according to input device offset values and gain values, and takes the presently set values of the Unit to be 0000 and 00FA0 (or 07D0 when the range is ±10 V) respectively. For example, assume that the specifications for an external input device (such as a display device) are 100.0 to 500.0. If voltage is output by the Analog Output Unit at a set value of 0000, and the actual display at the external input device shows not 100.0 but 100.5, the output voltage can be adjusted (lowered in this case) so that the display will show 100.0, and the set value (FFFB in this case) when the display shows exactly 100.0 can be set as 0000.

Similarly, for the gain value, if the Analog Output Unit outputs voltage at a set value of 0FA0, and the actual display at the external input device shows not 500.0 but 500.5, the output voltage can be adjusted (lowered in this case) so that the display will show 500.0, and the set value (0F9B in this case) when the display shows exactly 500.0 can be set as 0FA0.

Display at external input device	Set value before adjustment (word n+8)	Set value after adjustment
100.0	FFFB	0000
500.0	0F9B	0FA0

8-9-1 Adjustment Mode Operational Flow

The following diagram shows the flow of operations when using the adjustment mode for adjusting offset and gain.

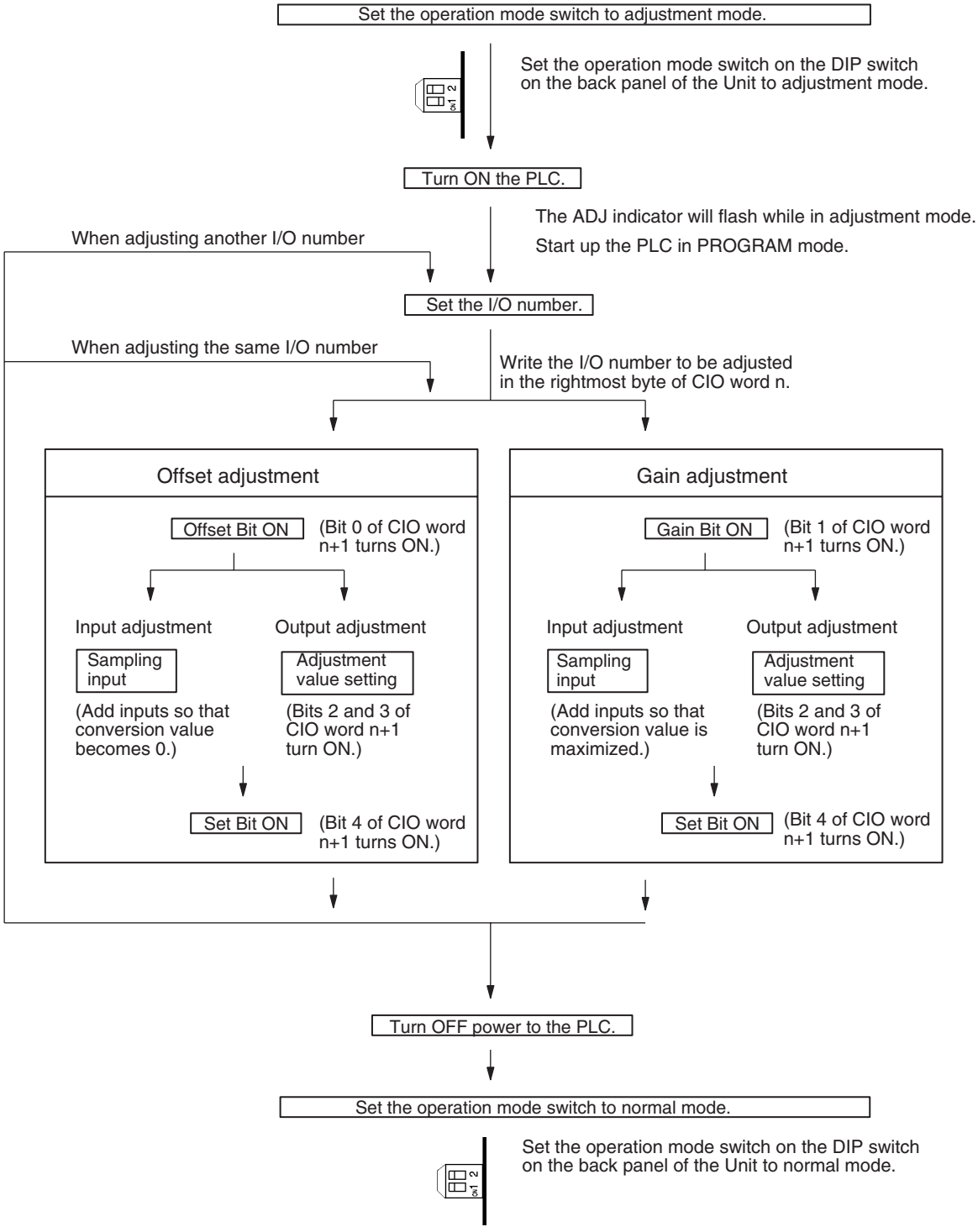

⚠ **Caution** Be sure to turn OFF the power to the PLC before changing the setting of the operation mode switch.

⚠ **Caution** Set the PLC to PROGRAM mode when using the Analog I/O Unit in adjustment mode. If the PLC is in MONITOR mode or RUN mode, the Analog I/O Unit will stop operating, and the input and output values that existed immediately before this stoppage will be retained.

⚠ **Caution** Always perform adjustments in conjunction with offset and gain adjustments.

Note Input adjustments can be performed more accurately in conjunction with mean value processing.

8-9-2 Input Offset and Gain Adjustment Procedures

Specifying Input Number to be Adjusted

To specify the input number to be adjusted, write the value to the rightmost byte of CIO word n as shown in the following diagram.

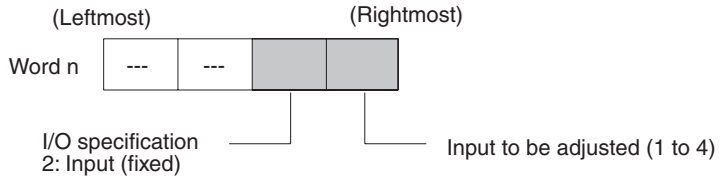

For the CIO word addresses, n = CIO 2000 + (unit number × 10).

The following example uses input number 1 adjustment for illustration. (The unit number is 0.)

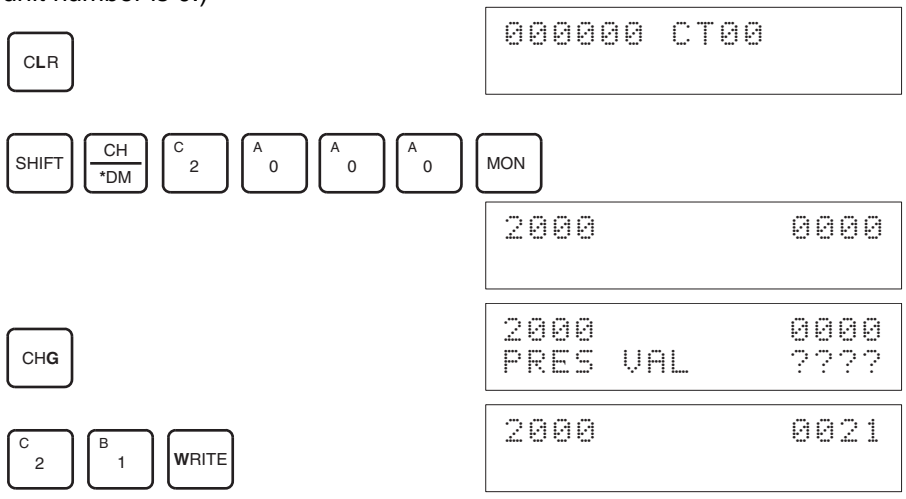

Bits Used for Adjusting Offset and Gain

The CIO word (n+1) bits shown in the following diagram are used for adjusting offset and gain.

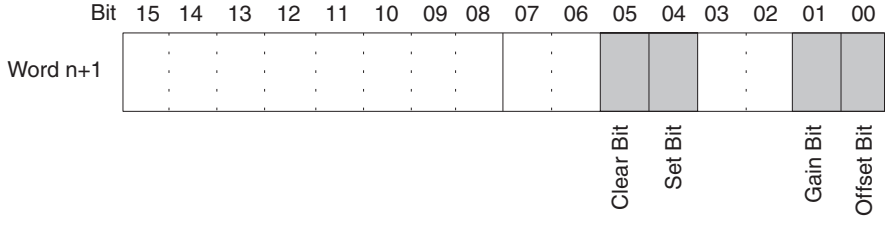

Offset Adjustment

The procedure for adjusting the analog input offset is explained below. As shown in the following diagram, the offset is adjusted by sampling inputs so that the conversion value becomes 0000.

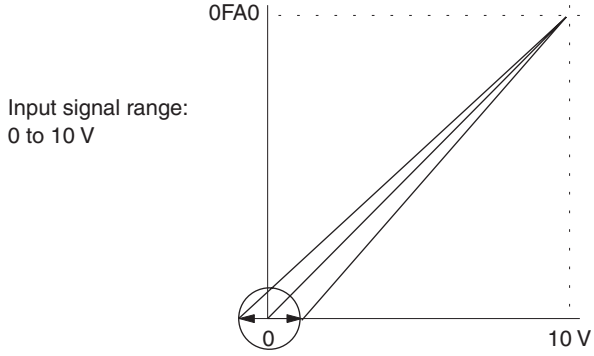

Offset adjustment input range

The following example uses input number 1 adjustment for illustration. (The unit number is 0.)

1,2,3...

1. Turn ON bit 00 (the Offset Bit) of CIO word n+1. (Hold the ON status.)

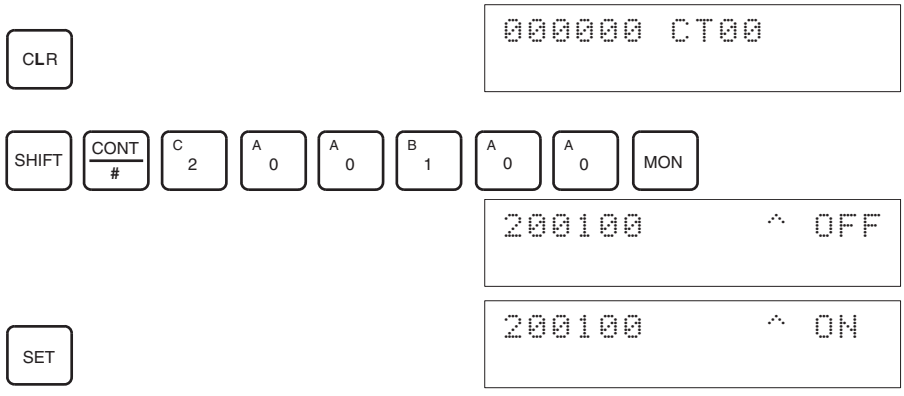

The analog input's digital conversion values while the Offset Bit is ON will be monitored in CIO word n+8.

2. Check whether the input devices are connected.

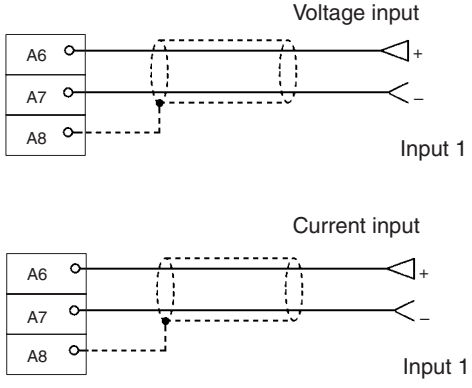

For current input, check that the voltage/ current switch is ON.

3. Input the voltage or current so that the conversion value becomes 0000. The following table shows the offset adjustment voltages and currents to be input according to the input signal range.

Input signal range	Input range	Word (n+8) monitoring value
0 to 10 V	–0.5 to 0.5 V	FF38 to 00C8
–10 to 10 V	–1.0 to 1.0 V	
1 to 5 V	0.8 to 1.2 V	
0 to 5 V	–0.25 to 0.25 V	
4 to 20 mA	3.2 to 4.8 mA	

4. After inputting the voltage or current so that the conversion value for the analog input terminal is 0000, turn ON bit 04 (the Set Bit) of CIO word n+1, and then turn it OFF again.

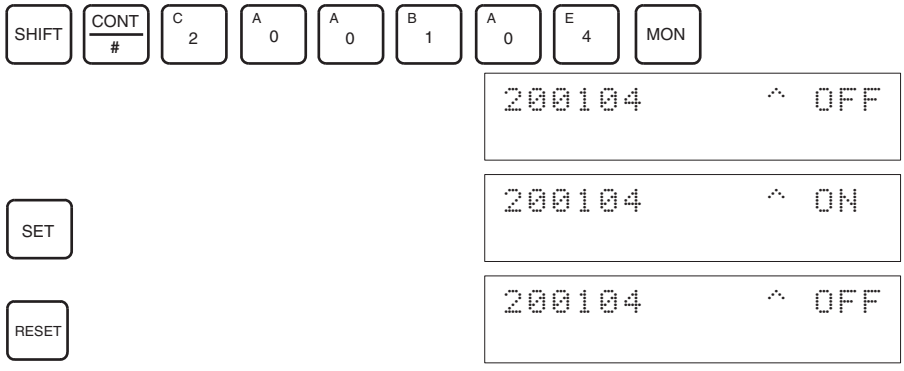

While the Offset Bit is ON, the offset value will be saved to the Unit's EEPROM when the Set Bit turns ON.

5. To finish the offset adjustment, turn OFF bit 00 (the Offset Bit) of CIO word n+1.

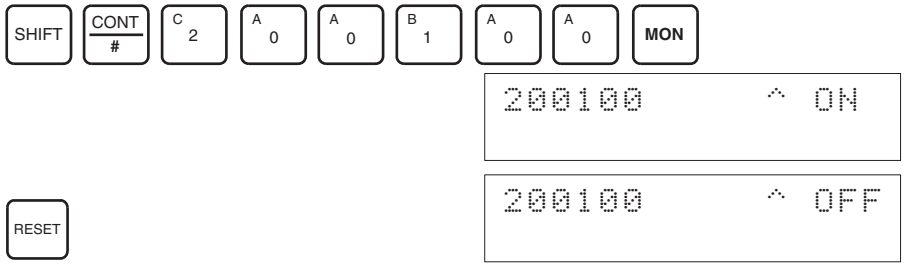

⚠ **Caution** Do not turn OFF the power supply or restart the Unit while the Set Bit is ON (data is being written to the EEPROM). Otherwise, illegal data may be written in the Unit's EEPROM and "EEPROM Errors" may occur when the power supply is turned ON or when the Unit is restarted, causing a malfunction.

⚠ **Caution** When making adjustments, be sure to perform both the offset adjustment and gain adjustment at the same time.

Note

1. The EEPROM can be overwritten 50,000 times.
2. While the Offset Bit or the Gain Bit is ON, the present conversion data will be displayed in word n+8.
   If the Offset Bit or the Gain Bit is OFF, the value immediately prior to turning the bit OFF will be held.

Gain Adjustment

The procedure for adjusting the analog input gain is explained below. As shown in the following diagram, the gain is adjusted by sampling inputs so that the conversion value is maximized.

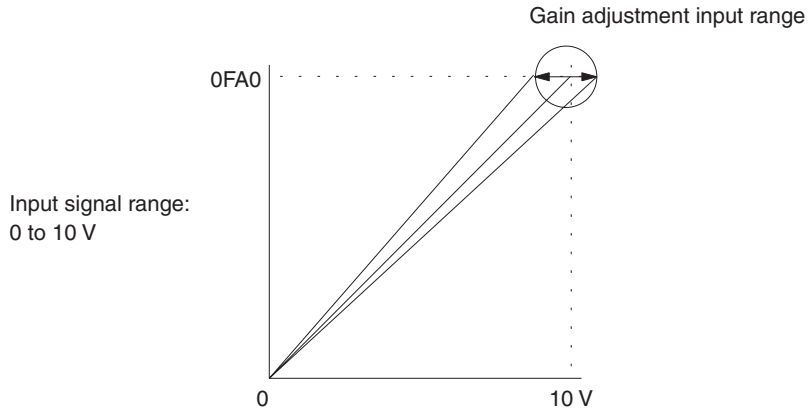

The following example uses input number 1 adjustment for illustration. (The unit number is 0.)

1,2,3... 1. Turn ON bit 01 (the Gain Bit) of CIO word n+1. (Hold the ON status.)

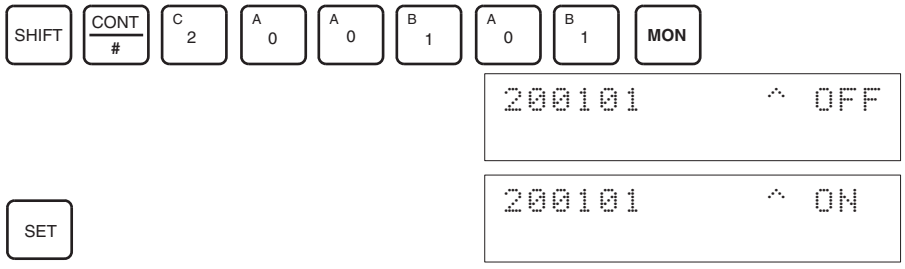

The analog input's digital conversion values while the Gain Bit is ON will be monitored in CIO word n+8.

2. Check whether the input devices are connected.

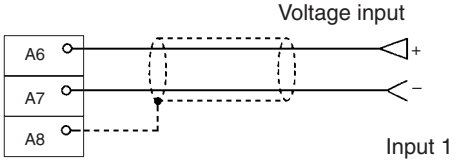

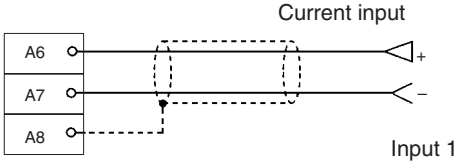

For current input, check that the voltage/ current switch is ON.

3. Input the voltage or current so that the conversion value is maximized (0FA0 or 07D0). The following table shows the gain adjustment voltages and currents to be input according to the input signal range.

Input signal range	Input range	Word (n+8) monitoring value
0 to 10 V	9.5 to 10.5 V	0ED8 to 1068
–10 to 10 V	9.0 to 11.0 V	0708 to 0898
1 to 5 V	4.8 to 5.2 V	0ED8 to 1068
0 to 5 V	4.75 to 5.25 V	0ED8 to 1068
4 to 20 mA	19.2 to 20.8 mA	0ED8 to 1068

4. With the voltage or current having been input so that the conversion value for the Analog I/O Unit is maximized (0FA0 or 07D0), turn bit 04 (the Set Bit) of CIO word n+1 ON and then OFF again.

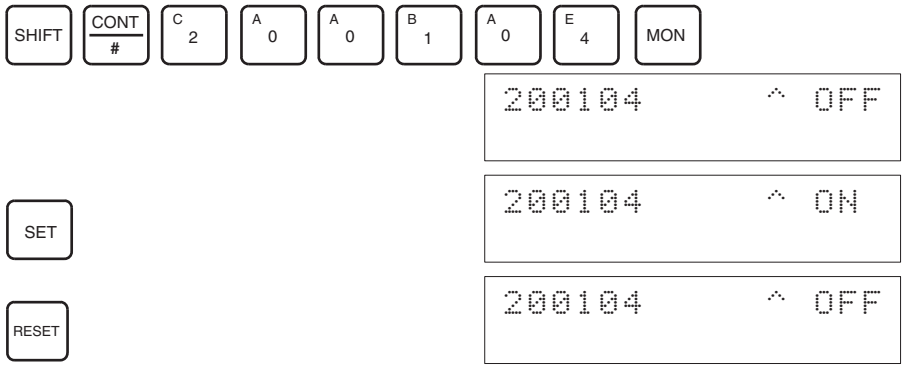

While the Gain Bit is ON, the gain value will be saved to the Unit's EEPROM when the Set Bit turns ON.

5. To finish the gain adjustment, turn OFF bit 01 (the Gain Bit) of CIO word n+1.

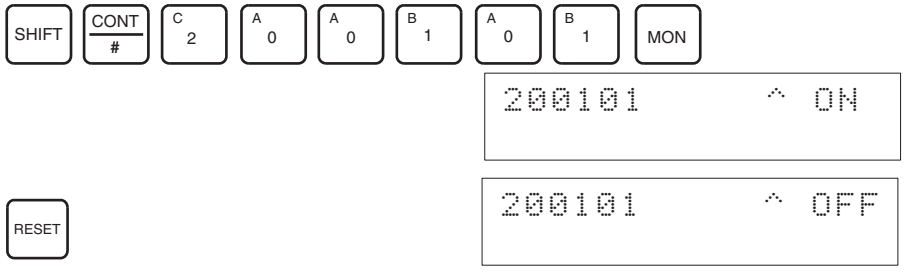

⚠ **Caution** Do not turn OFF the power supply or restart the Unit while the Set Bit is ON (data is being written to the EEPROM). Otherwise, illegal data may be written in the Unit's EEPROM and "EEPROM Errors" may occur when the power supply is turned ON or when the Unit is restarted, causing a malfunction.

⚠ **Caution** When making adjustments, be sure to perform both the offset adjustment and gain adjustment at the same time.

Note

1. The EEPROM can be overwritten 50,000 times.
2. While the Offset Bit or the Gain Bit is ON, the present conversion data will be displayed in word n+8.
   If the Offset Bit or the Gain Bit is OFF, the value immediately prior to turning the bit OFF will be held.

Clearing Offset and Gain Adjusted Values

Follow the procedure outlined below to return the offset and gain adjusted values to their default settings.

The following example uses input number 1 adjustment for illustration. (The unit number is 0.)

1,2,3...

1. Turn ON bit 05 (the Clear Bit) of CIO word n+1. (Hold the ON status.) Regardless of the input value, 0000 will be monitored in CIO word n+8.

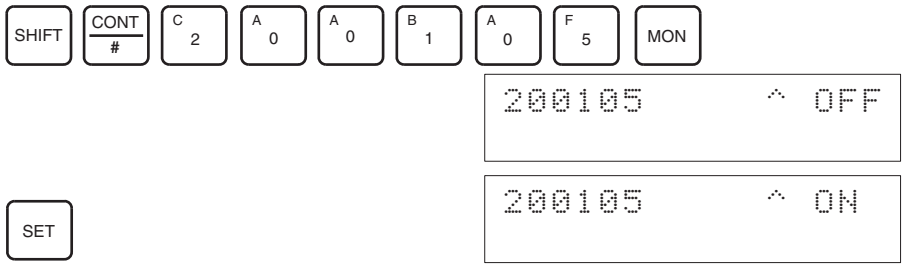

2. Turn bit 04 of CIO word n+1 ON and then OFF again.

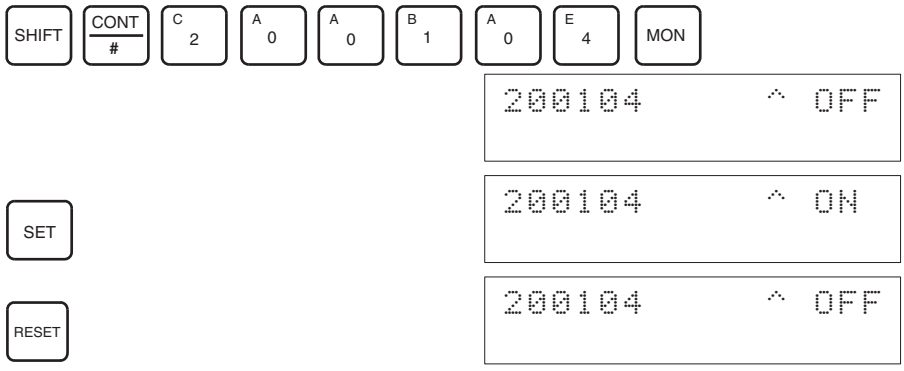

While the Clear Bit is ON, the adjusted value will be cleared and reset to the default offset and gain values when the Set Bit turns ON.

3. To finish the clearing of adjusted values, turn OFF bit 05 (the Clear Bit) of CIO word n+1.

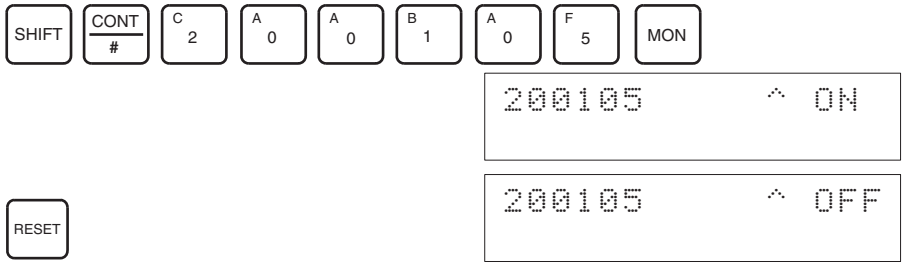

⚠ **Caution** Do not turn OFF the power supply or restart the Unit while the Set Bit is ON (data is being written to the EEPROM). Otherwise, illegal data may be written in the Unit's EEPROM and "EEPROM Errors" may occur when the power supply is turned ON or when the Unit is restarted, causing a malfunction.

⚠ **Caution** When making adjustments, be sure to perform both the offset adjustment and gain adjustment at the same time.

Note The EEPROM can be overwritten 50,000 times.

8-9-3 Output Offset and Gain Adjustment Procedures

Specifying Output Number to be Adjusted

To specify the output number to be adjusted, write the value to the rightmost byte of CIO word n as shown in the following diagram.

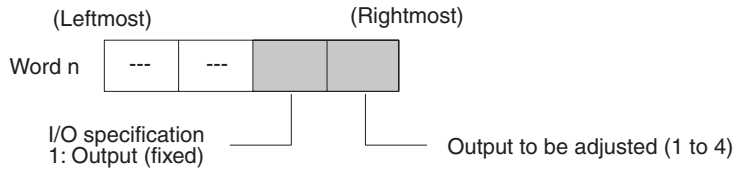

For the CIO word addresses, n = CIO 2000 + unit number × 10.

The following example uses output number 1 adjustment for illustration. (The unit number is 0.)

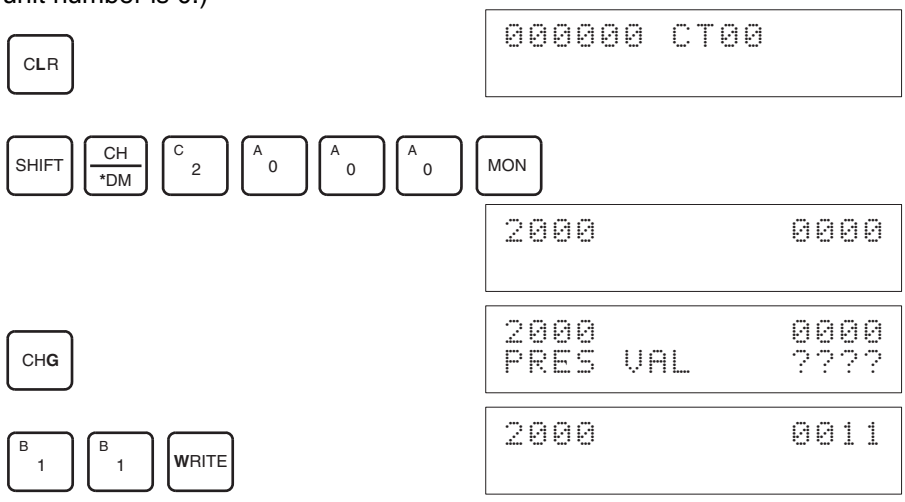

Bits Used for Adjusting Offset and Gain

The CIO word n+1 bits shown in the following diagram are used for adjusting offset and gain.

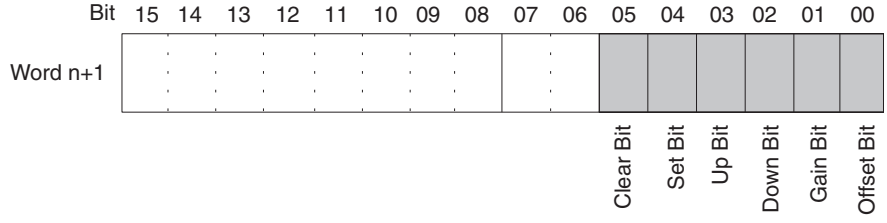

Offset Adjustment

The procedure for adjusting the analog output offset is explained below. As shown in the following diagram, the set value is adjusted so that the analog output reaches the standard value (0V/1V).

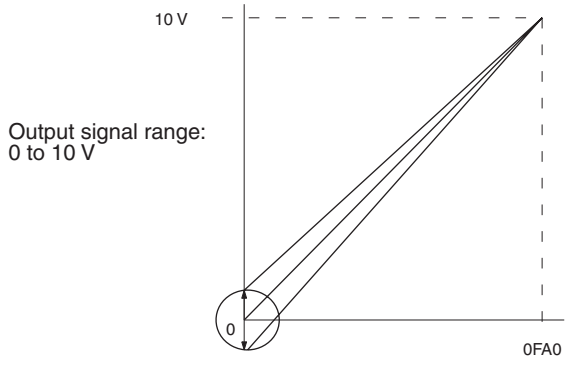

Offset adjustment output range

The following example uses output number 1 adjustment for illustration. (The unit number is 0.)

1,2,3... 1. Turn ON bit 00 (the Offset Bit) of CIO word n+1. (Hold the ON status.)

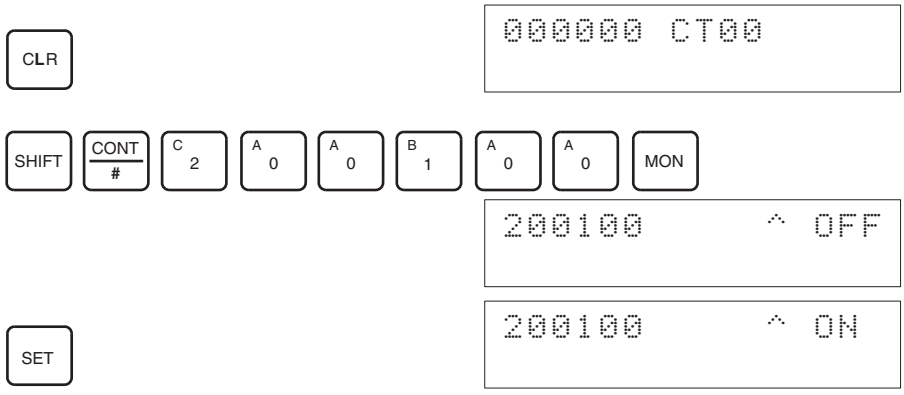

2. Check whether the output devices are connected.

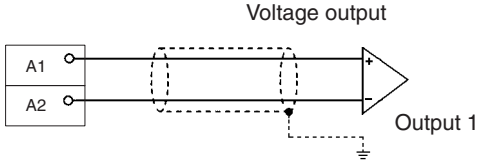

3. Monitor CIO word n+8 and check the set value while the Offset Bit is ON.

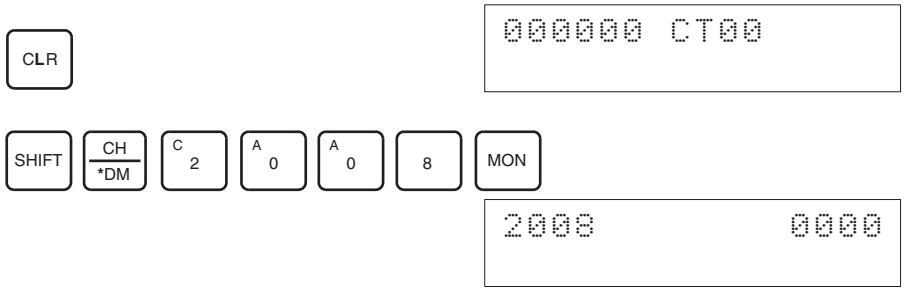

4. Change the set value so that the output voltage are as shown in the following table. The data can be set within the indicated ranges.

Output signal range	Possible output voltage/ current adjustment	Output range
0 to 10 V	–0.5 to 0.5 V	FF38 to 00C8
–10 to 10 V	–1.0 to 1.0 V	
1 to 5 V	0.8 to 1.2 V	
0 to 5 V	–0.25 to 0.25 V	

Change the set value, using the Up Bit (bit 03 of word n+1) and the Down Bit (bit 02 of word n+1).

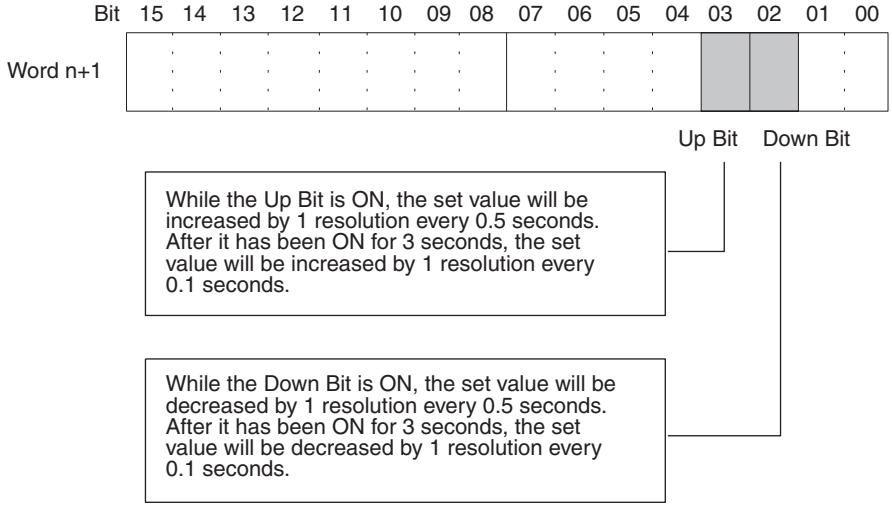

- The following example increases the output voltage.

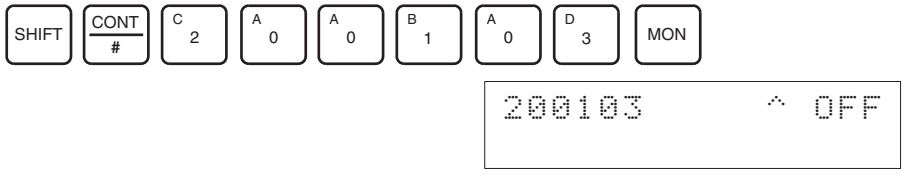

The bit will remain ON until the output becomes an appropriate value, at which time, it will turn OFF.

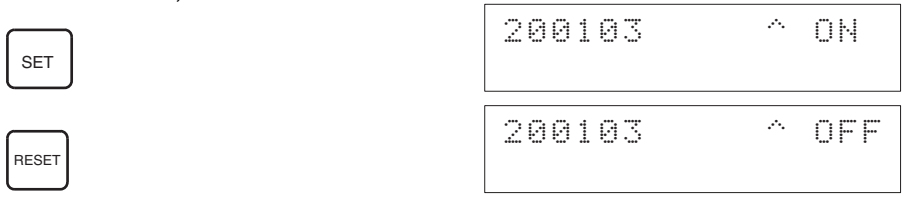

- The following example decreases the output voltage.

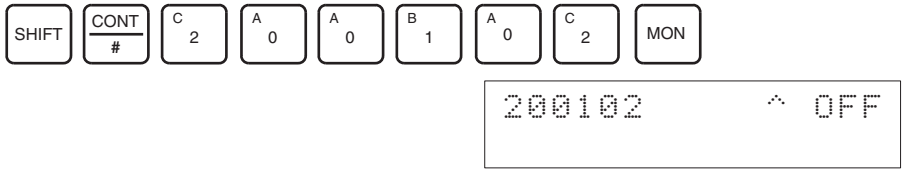

The bit will remain ON until the output becomes an appropriate value, at which time, it will turn OFF.

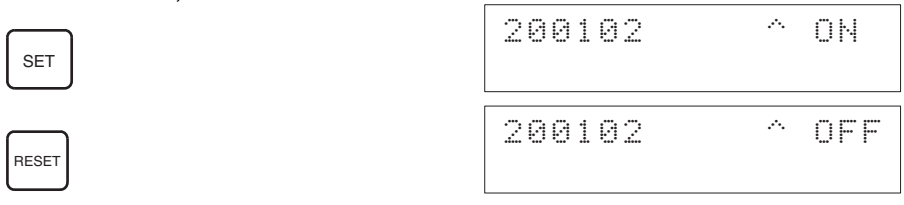

5. Check the 0-V/1-V output, and then turn bit 04 (the Set Bit) of CIO word n+1 ON and then OFF again.

SHIFT CONT/# C 2 A 0 A 0 B 1 A 0 E 4 MON

```
200104      ^ OFF
```

SET

```
200104      ^ ON
```

RESET

```
200104      ^ OFF
```

While the Offset Bit is ON, the offset value will be saved to the Unit's EEPROM when the Set Bit turns ON.

6. To finish the offset adjustment, turn OFF bit 00 (the Offset Bit) of CIO word n+1.

SHIFT CONT/# C 2 A 0 A 0 B 1 A 0 A 0 MON

```
200100      ^ ON
```

SET

```
200100      ^ OFF
```

⚠ **Caution** Do not turn OFF the power supply or restart the Unit while the Set Bit is ON (data is being written to the EEPROM). Otherwise, illegal data may be written in the Unit's EEPROM and "EEPROM Errors" may occur when the power supply is turned ON or when the Unit is restarted, causing a malfunction.

⚠ **Caution** When making adjustments, be sure to perform both the offset adjustment and gain adjustment at the same time.

Note The EEPROM can be overwritten 50,000 times.

Gain Adjustment

The procedure for adjusting the analog output gain is explained below. As shown in the following diagram, the set value is adjusted so that the analog output is maximized (to 10 V/5 V).

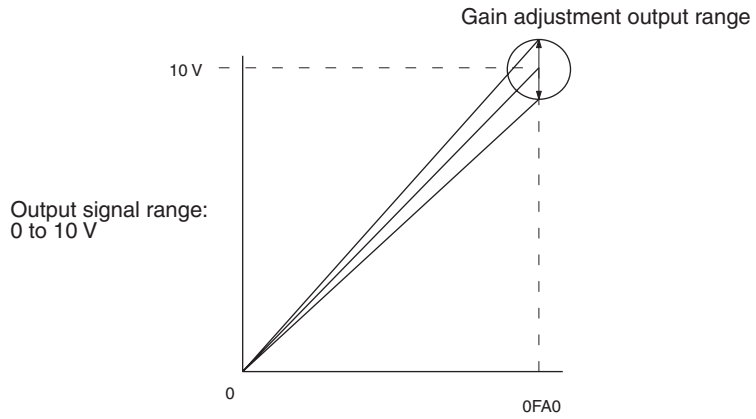

The following example uses output number 1 adjustment for illustration. (The unit number is 0.)

1,2,3... 1. Turn ON bit 01 (the Gain Bit) of CIO word n+1. (Hold the ON status.)

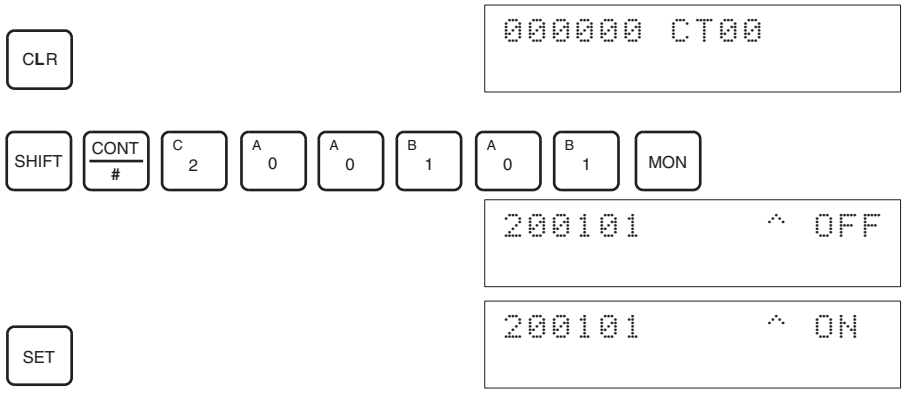

2. Check whether the output devices are connected.

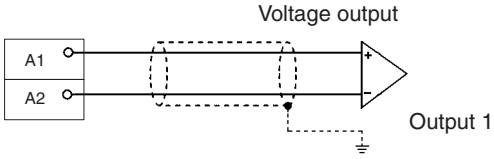

3. Monitor CIO word n+8 and check the set value while the Gain Bit is ON.

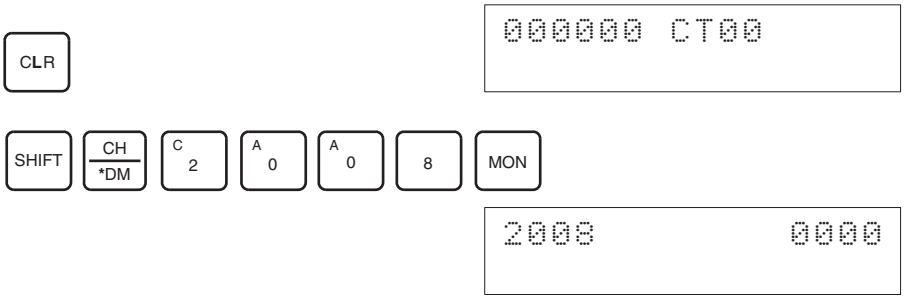

4. Change the set value so that the output voltage is as shown in the following table. The data can be set within the indicated ranges.

Output signal range	Possible output voltage/ current adjustment	Output range
0 to 10 V	9.5 to 10.5 V	0ED8 to 1068
–10 to 10 V	9.0 to 11.0 V	0708 to 0898
1 to 5 V	4.8 to 5.2 V	0ED8 to 1068
0 to 5 V	4.75 to 5.25 V	0ED8 to 1068

Change the set value, using the Up Bit (bit 03 of word n+1) and the Down Bit (bit 02 of word n+1).

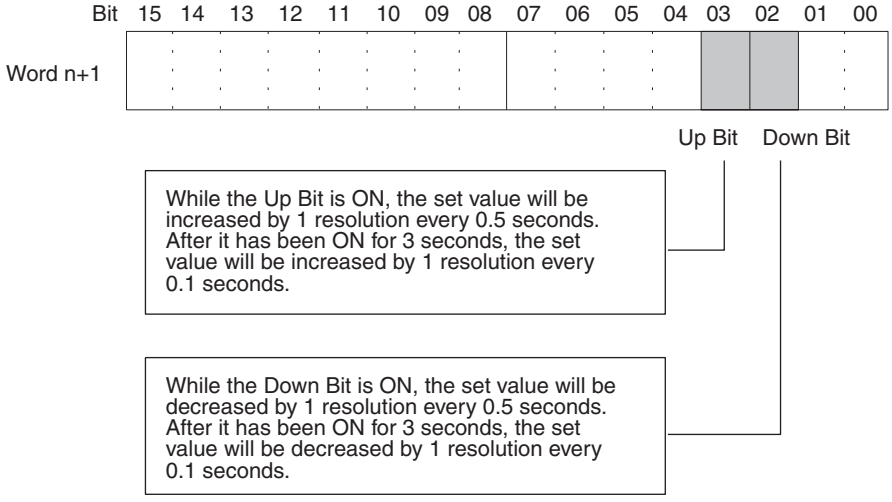

- The following example increases the output voltage.

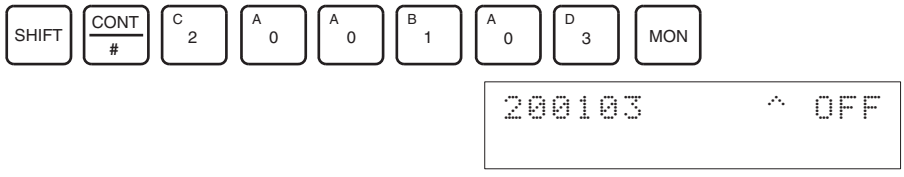

The bit will remain ON until the output voltage becomes an appropriate value, at which time, the output will turn OFF.

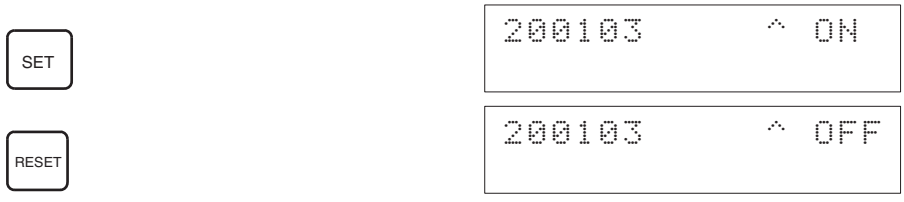

- The following example decreases the output voltage.

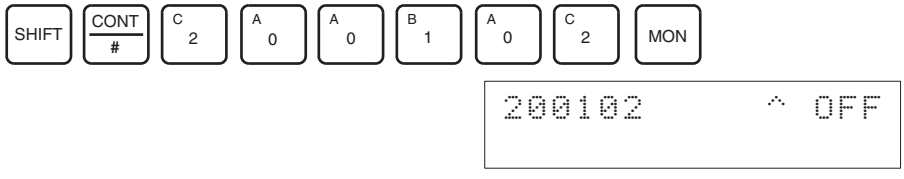

The bit will remain ON until the output voltage becomes an appropriate value, at which time, the output will turn OFF.

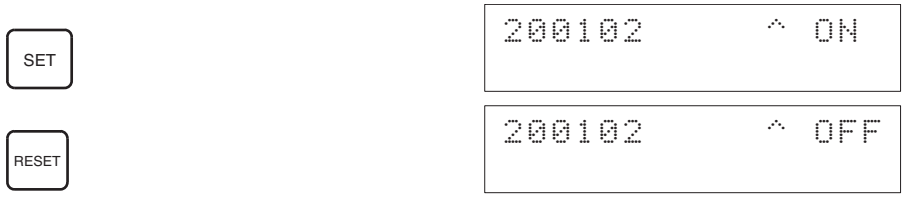

5. Check the 10V/5V output, and then turn bit 04 (the Set Bit) of CIO word n+1 ON and then OFF again.

SHIFT CONT # C 2 A 0 A 0 B 1 A 0 E 4 MON

```
200104        ^ OFF
```

SET

```
200104        ^ ON
```

RESET

```
200104        ^ OFF
```

While the Gain Bit is ON, the gain value will be saved to the Unit's EEPROM when the Set Bit turns ON.

6. To finish the gain adjustment, turn OFF bit 01 (the Gain Bit) of CIO word n+1.

SHIFT CONT # C 2 A 0 A 0 B 1 A 0 B 1 MON

```
200101        ^ ON
```

RESET

```
200101        ^ OFF
```

⚠ **Caution** Do not turn OFF the power supply or restart the Unit while the Set Bit is ON (data is being written to the EEPROM). Otherwise, illegal data may be written in the Unit's EEPROM and "EEPROM Errors" may occur when the power supply is turned ON or when the Unit is restarted, causing a malfunction.

⚠ **Caution** When making adjustments, be sure to perform both the offset adjustment and gain adjustment at the same time.

Note The EEPROM can be overwritten 50,000 times.

Clearing Offset and Gain Adjusted Values

Follow the procedure outlined below to return the offset and gain adjusted values to their default settings.

The following example uses output number 1 adjustment for illustration. (The unit number is 0.)

1,2,3...

1. Turn ON bit 05 (the Clear Bit) of CIO word n+1. (Hold the ON status.) Regardless of the set value, 0000 will be monitored in CIO word n+8.

SHIFT CONT # C 2 A 0 A 0 B 1 A 0 F 5 MON

```
200105        ^ OFF
```

SET

```
200105        ^ ON
```

2. Turn bit 04 of CIO word n+1 ON and then OFF again.

SHIFT CONT/# C 2 A 0 A 0 B 1 A 0 E 4 MON

```
200104        ^ OFF
```

SET

```
200104        ^ ON
```

RESET

```
200104        ^ OFF
```

While the Clear Bit is ON, the adjusted value will be cleared and reset to the default offset and gain values when the Set Bit turns ON.

3. To finish the clearing of adjusted values, turn OFF bit 05 (the Clear Bit) of CIO word n+1.

SHIFT CONT/# C 2 A 0 A 0 B 1 A 0 F 5 MON

```
200105        ^ ON
```

RESET

```
200105        ^ OFF
```

⚠ **Caution** Do not turn OFF the power supply or restart the Unit while the Set Bit is ON (data is being written to the EEPROM). Otherwise, illegal data may be written in the Unit's EEPROM and "EEPROM Errors" may occur when the power supply is turned ON or when the Unit is restarted, causing a malfunction.

Note The EEPROM can be overwritten 50,000 times.

8-10 Handling Errors and Alarms

8-10-1 Indicators and Error Flowchart

Indicators

If an alarm or error occurs in the Analog I/O Unit, the ERC or ERH indicators on the front panel of the Unit will light.

Front panel of Unit

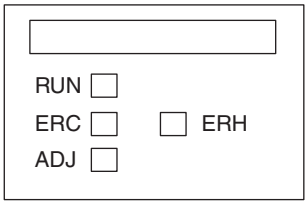

LED	Meaning	Indicator	Operating status
RUN (green)	Operating	Lit	Operating in normal mode.
		Not lit	Unit has stopped exchanging data with the CPU Unit.
ERC (red)	Unit has detected an error	Lit	Alarm has occurred (such as disconnection detection) or initial settings are incorrect.
		Not lit	Operating normally.
ADJ (yellow)	Adjusting	Flashing	Operating in offset/gain adjustment mode.
		Not lit	Other than the above.
ERH (red)	Error in the CPU Unit	Lit	Error has occurred during data exchange with the CPU Unit.
		Not lit	Operating normally.

Troubleshooting Procedure

Use the following procedure for troubleshooting Analog I/O Unit errors.

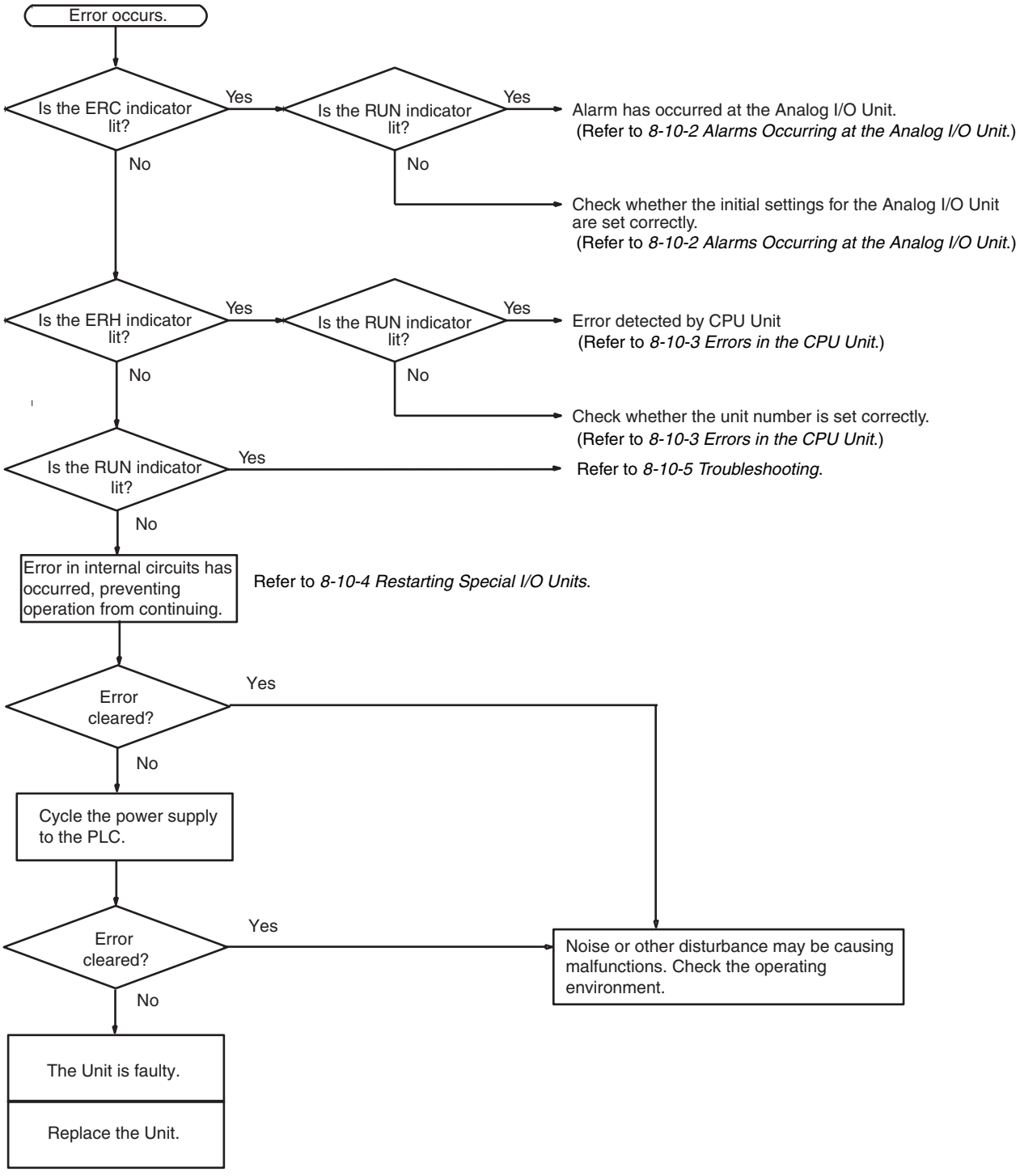

8-10-2 Alarms Occurring at the Analog I/O Unit

When an alarm occurs at the Analog I/O Unit, the ERC indicator lights and the Alarm Flags are stored in bits 08 to 15 of CIO word n+9.

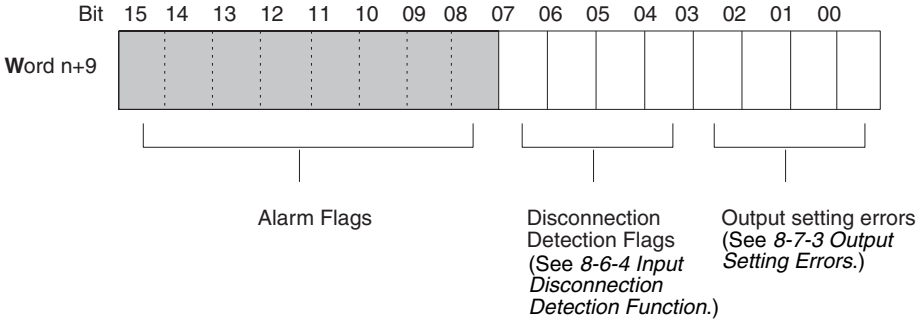

ERC and RUN Indicators: Lit

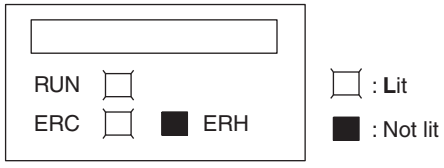

The ERC and RUN indicators will be lit when an error occurs while the Unit is operating normally. The following alarm flags will turn ON in CIO word n+9. These alarm flags will turn OFF automatically when the error is cleared.

Word n + 9	Alarm flag	Error contents	I/O status	Countermeasure
Bits 00 to 03	Output Set Value Error	The output setting range has been exceeded.	Output value set by output hold function.	Correct the set value.
Bits 04 to 07	Disconnection Detection	A disconnection was detected. (See note.)	Conversion data becomes 0000.	Check the rightmost byte of CIO word n+9. The inputs for bits that are ON may be disconnected. Restore any disconnected inputs.
Bit 14	(Adjustment mode) EEPROM Writing Error	An EEPROM writing error has occurred while in adjustment mode.	Holds the output status immediately prior to the error.	Turn the Set Bit OFF, ON, and OFF again. If the error persists even after the reset, replace the Analog I/O Unit.

Note Disconnection detection operates for input numbers used with a range of 1 to 5 V (4 to 20 mA).

For the CIO word addresses, n = CIO 2000 + (unit number × 10).

ERC Indicator and RUN Indicator: Lit, ADJ Indicator: Flashing

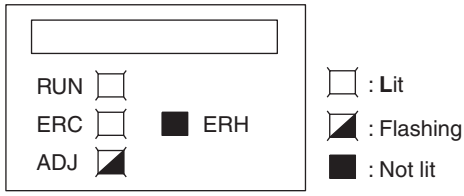

This alarm will occur in the case of incorrect operation while in the adjustment mode. In adjustment mode, the Adjustment Mode ON Flag will turn ON in bit 15 of CIO word n+9.

Word n + 9	Alarm flag	Error contents	I/O status	Countermeasure
Bit 12	(Adjustment mode) Input Value Adjustment Range Exceeded	In adjustment mode, offset or gain cannot be adjusted because input value is out of the permissible range for adjustment.	Conversion data corresponding to the input signal is monitored in word n+8.	If making the adjustment by means of a connected input device, first adjust the input device before adjusting the Analog I/O Unit.
Bit 13	(Adjustment mode) I/O Number Setting Error	In adjustment mode, adjustment cannot be performed because the specified input or output number is not set for use or because the wrong input or output number is specified.	Holds the values immediately prior to the error. No data is changed.	Check whether the word n input or output number to be adjusted is set from 11 to 14, or 21 to 24. Check whether the input or output number to be adjusted is set for use by means of the DM setting.
Bit 15 only ON	(Adjustment Mode) PLC Error	The PLC is in either MONITOR or RUN mode while the Analog I/O Unit is operating in adjustment mode.	Holds the values immediately prior to the error. No data is changed.	Detach the Unit. Switch the rear panel DIP switch pin to OFF. Restart the Unit in normal mode.

Note When a PLC error occurs in the adjustment mode, Unit operations will stop operating. (The input and output values immediately prior to the error will be held.)

ERC Indicator: Lit, RUN Indicator: Not Lit

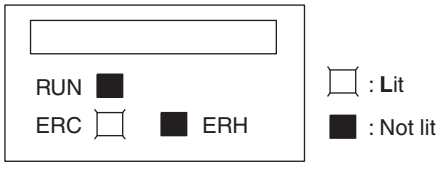

The ERC indicator will be lit when the initial settings for the Analog I/O Unit are not set correctly. The alarm flags for the following errors will turn ON in CIO word n+9. These alarm flags will turn OFF when the error is cleared and

the Unit is restarted, or the Special I/O Unit Restart Bit is turned ON and then OFF again.

Word n + 9	Alarm flag	Error contents	I/O status	Countermeasure
Bit 08	Ratio Conversion Use Setting Error	The I/O number for the ratio conversion function has been set to be not used.	Conversion does not start and data becomes 0000.	Set the I/O number for use.
Bit 09	Ratio Set Value Error	A number outside of the 0 to 9999 BCD range has been specified for the ratio set value.		Specify a number from 0 to 9999 BCD.
Bit 10	Output Hold Setting Error	The wrong output status for when conversion is stopped has been specified.		Specify a number from 0000 to 0002.
Bit 11	Mean Value Processing Setting Error	The wrong number of samplings has been specified for mean processing.		Specify a number from 0000 to 0006.

8-10-3 Errors in the CPU Unit

When errors occur in the CPU Unit or I/O bus, and I/O refresh with the Special I/O Unit is not performed correctly resulting in the Analog I/O Unit malfunctioning, the ERH indicator will be lit.

ERH and RUN Indicators: Lit

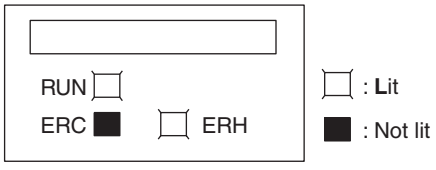

The ERH and RUN indicators will be lit if an error occurs in the I/O bus causing a WDT (watchdog timer) error in the CPU Unit, resulting in incorrect I/O refresh with the Analog I/O Unit.

Turn ON the power supply again or restart the system.
For further details, refer to *CS-series CS1G/H-CPU□□-EV1, CS1G/H-CPU□□H Programmable Controllers Operation Manual* (W339).

Error	Error contents	Input condition	Output condition
I/O bus error	Error has occurred during data exchange with the CPU Unit.	Conversion data becomes 0000.	Depends on the output hold function.
CPU Unit monitoring error (see note)	No response from CPU Unit during fixed period.	Maintains the condition existing before the error.	Maintains the condition existing before the error.
CPU Unit WDT error	Error has been generated in CPU Unit.	Changes to undefined state.	Depends on the output hold function.

Note No error will be detected by the CPU Unit or displayed on the Programming Console, because the CPU Unit is continuing operation.

ERH Indicator: Lit, RUN Indicator: Not Lit

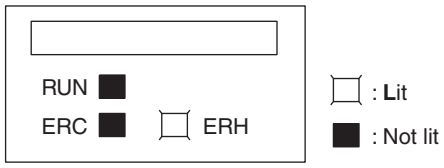

The unit number for the Analog I/O Unit has not been set correctly.

Error	Error contents	Input condition	Output condition
Duplicate Unit Number	The same unit number has been assigned to more than one Unit or the unit number was set to a value other than 00 to 95.	Conversion does not start and data becomes 0000.	The output value will be 0 V.
Special I/O Unit Setting Error	The Special I/O Units registered in the I/O table are different from the ones actually mounted.		

8-10-4 Restarting Special I/O Units

There are two ways to restart Special I/O Unit operation after having changed DM contents or having cleared the cause of an error. The first way is to turn the power to the PLC OFF and ON, and the second way is to turn ON the Special I/O Unit Restart Bit ON.

Special I/O Unit Restart Bits

Bits	Functions	
A50200	Unit #0 Restart Bit	Turning the Restart Bit for any Unit ON and then OFF again restarts that Unit.
A50201	Unit #1 Restart Bit	
to	to	
A50215	Unit #15 Restart Bit	
A50300	Unit #16 Restart Bit	
to	to	
A50715	Unit #95 Restart Bit	

If the error is not cleared even after turning the Special I/O Unit Restart Bit ON and then OFF again, then replace the Unit.

There previous input data will be held and the output will be 0 V while restarting the Unit.

8-10-5 Troubleshooting

The following tables explain the probable causes of troubles that may occur, and the countermeasures for dealing with them.

Conversion Data Does Not Change

Probable cause	Countermeasure	Page
The input is not set for being used.	Set the input to be used.	332
The peak value hold function is in operation.	Turn OFF the peak value hold function if it is not required.	337
The input device is not working, the input wiring is wrong, or there is a disconnection.	Using a tester, check to see if the input voltage or current is changing.	---
	Use Unit's alarm flags to check for a disconnection.	338

Value Does Not Change as Intended

Probable cause	Countermeasure	Page
The input device's signal range does not match the input signal range for the relevant input number at the Analog I/O Unit.	Check the specifications of the input device, and match the settings for the input signal ranges.	305
The offset and gain are not adjusted.	Adjust the offset and gain.	345
When using the 4 mA to 20 mA range, the voltage/current switch is not turned ON.	Turn ON the voltage/current switch.	311, 318
The ratio conversion function is set to be used, so the calculation results are being monitored.	Correct the conversion settings.	363

Conversion Values are Inconsistent

Probable cause	Countermeasure	Page
The input signals are being affected by external noise.	Change the shielded cable connection to the Unit's COM terminal.	323
	Insert a 0.01-μF to 0.1-μF ceramic capacitor or film capacitor between the input's (+) and (–) terminals.	---
	Try increasing the number of mean value processing buffers.	334

Analog Output Does Not Change

Probable Cause	Countermeasure	Page
The output is not set for being used.	Set the output to be used.	339
The output hold function is in operation.	Turn ON the Output Conversion Enable Bit.	341
The conversion value is set outside of the permissible range.	Set the data within the range.	307, 339

Output Does Not Change as Intended

Probable Cause	Countermeasure	Page
The output signal range setting is wrong.	Correct the output signal range setting.	339
The I/O specifications of the output device do not match those of the Analog I/O Unit (e.g., input signal range, input impedance).	Change the output device.	303
The offset or gain is not adjusted.	Adjust the offset or gain.	345
The ratio conversion function is set to be used.	Correct the conversion settings.	342

Outputs are Inconsistent

Probable Cause	Countermeasure	Page
The output signals are being affected by external noise.	Try changing the shielded cable connection (e.g., the grounding at the output device).	---

SECTION 9
CJ-series Analog I/O Unit (CJ1W-MAD42)

This section explains how to use the CJ1W-MAD42 Analog I/O Unit.

9-1 Specifications 370
9-1-1 Specifications 370
9-1-2 I/O Function Block Diagram 372
9-1-3 Input Specifications 373
9-1-4 Output Specifications 375
9-2 Operating Procedure 377
9-2-1 Procedure Examples 378
9-3 Components and Switch Settings 384
9-3-1 Indicators 385
9-3-2 Unit Number Switches 385
9-3-3 Voltage/Current Switch. 386
9-4 Wiring 387
9-4-1 Terminal Arrangement 387
9-4-2 Internal Circuitry 387
9-4-3 Voltage Input Disconnection. 389
9-4-4 I/O Wiring Example 390
9-4-5 I/O Wiring Considerations 391
9-5 Exchanging Data with the CPU Unit 391
9-5-1 Outline of Data Exchange. 391
9-5-2 Unit Number Settings 392
9-5-3 Operation Mode Setting 392
9-5-4 Special I/O Unit Restart Bits 393
9-5-5 Fixed Data Allocations 394
9-5-6 I/O Refresh Data Allocations 397
9-6 Analog Input Functions and Operating Procedures 400
9-6-1 Input Settings and Conversion Values 400
9-6-2 Conversion Time and Resolution Setting 402
9-6-3 Mean Value Processing. 402
9-6-4 Peak Value Hold Function 405
9-6-5 Input Scaling Function 406
9-6-6 Input Disconnection Detection Function 408
9-7 Analog Output Functions and Operating Procedures 409
9-7-1 Output Settings and Conversions 409
9-7-2 Conversion Time and Resolution Setting 411
9-7-3 Output Hold Function. 412
9-7-4 Output Scaling Function. 413
9-7-5 Output Setting Errors 415
9-8 Ratio Conversion Function 415
9-9 Adjusting Offset and Gain 418
9-9-1 Adjustment Mode Operational Flow 419
9-9-2 Input Offset and Gain Adjustment Procedures. 420
9-9-3 Output Offset and Gain Adjustment Procedures 426
9-10 Handling Errors and Alarms 434
9-10-1 Indicators and Error Flowchart. 434
9-10-2 Alarms Occurring at the Analog I/O Unit 436
9-10-3 Errors in the CPU Unit 438
9-10-4 Restarting Special I/O Units. 439
9-10-5 Troubleshooting 439

9-1 Specifications

9-1-1 Specifications

Item	CJ1W-MAD42		
Unit type	CJ-series Special I/O Unit		
Isolation	Between I/O and PLC signals: Photocoupler (No isolation between I/O signals.)		
External terminals	18-point detachable terminal block (M3 screws)		
Current consumption	580 mA max. at 5 V DC		
Dimensions (mm) (See note 1.)	31 × 90 × 65 (W × H × D)		
Weight	150 g max.		
General specifications	Conforms to general specifications for SYSMAC CJ-series Series.		
Mounting position	CJ-series CPU Rack or CJ-series Expansion Rack (Cannot be mounted to a C200H Expansion I/O Rack or a SYSMAC BUS Slave Rack.)		
Maximum number of Units (See note 2.)	Per CPU Rack or Expansion Rack (See note 2.)	Power Supply Unit	No. of mountable Units
		CJ1W-PA205R CJ1W-PA205C CJ1W-PD025	CPU Rack: 7 Units/Rack Expansion Rack: 8 Units/Rack
		CJ1W-PA202	CPU Rack: 4 Units/Rack Expansion Rack: 4 Units/Rack
		CJ1W-PD022	CPU Rack: 2 Units/Rack Expansion Rack: 3 Units/Rack
Data exchange with CPU Units	Special I/O Unit Area CIO 200000 to CIO295915 (Words CIO 2000 to CIO 2959): Exchanges 10 words of data per Unit. Internal Special I/O Unit DM Area (D20000 to D29599)		

Note
1. Refer to *Appendix A Dimensions* on page 441 for details on the Unit's dimensions.
2. This is the maximum number of Units that can be mounted to a CJ2H-CPU6□ CPU Unit (no EtherNet/IP). The maximum number of Analog Output Units that can be mounted to one Rack varies depending on the current consumption of the other Units mounted to the Rack.

Input Specifications and Functions

Item		Voltage input	Current input
Number of analog inputs		4	
Input signal range (See note 3.)		1 to 5 V 0 to 5 V 0 to 10 V –10 to 10 V	4 to 20 mA (See note 4.)
Maximum rated input (for 1 point) (See note 5.)		±15 V	±30 mA
External input impedance		1 MΩ min.	250 Ω (rated value)
Resolution		4,000/8,000 (full scale) (See note 8.)	
Converted output data		16-bit binary data	
Accuracy (See note 6.)	25°C	±0.2% of full scale	
	0°C to 55°C	±0.4% of full scale	
A/D conversion time (See note 7.)		1.0 ms/500 μs max. per point	
Mean value processing		Stores the last "n" data conversions in the buffer, and stores the mean value of the conversion values. Number of mean value buffers: n = 2, 4, 8, 16, 32, 64	
Peak value holding		Stores the maximum conversion value while the Peak Value Hold Bit is ON.	

Item	Voltage input	Current input
Scaling	Enabled only for conversion time of 1 ms and resolution of 4,000. Setting any values within a range of ±32,000 as the upper and lower limits allows the A/D conversion result to be output with these values as full scale.	
Input disconnection detection	Detects the disconnection and turns ON the Disconnection Detection Flag.	

3. Input and output signal ranges can be set for each input and output.
4. Voltage input or current input are chosen by using the voltage/current switch at the back of the terminal block.
5. The Analog I/O Unit must be operated according to the input specifications provided here. Operating the Unit outside these specifications will cause the Unit to malfunction.
6. The accuracy is given for full scale. For example, an accuracy of ±0.2% means a maximum error of ±8 (BCD).
7. A/D conversion time is the time it takes for an analog signal to be stored in memory as converted data after it has been input. It takes at least one cycle before the converted data is read by the CPU Unit.
8. By means of the D(m+18) setting, the resolution can be changed to 8,000, and the conversion time can be changed to 500 μs.

Output Specifications

Item		Voltage output	Current output
Number of analog outputs		2	
Output signal range (See note 1.)		1 to 5 V 0 to 5 V 0 to 10 V –10 to 10 V	4 to 20 mA
External output impedance		0.5 Ω max.	---
Maximum external output current (for 1 point)		2.4 mA	---
Maximum allowed load resistance		---	600 Ω
Resolution		4,000/8,000 (full scale) (See note 5.)	
Set data		16-bit binary data	
Accuracy (See note 2.)	25°C	±0.3% of full scale	±0.3% of full scale
	0°C to 55°C	±0.5% of full scale	±0.6% of full scale
D/A conversion time (See note 3.)		1.0 ms/500 μs max. per point	
Output hold function		Outputs the specified output status (CLR, HOLD, or MAX) under any of the following circumstances. When the Conversion Enable Bit is OFF. (See note 4.) In adjustment mode, when a value other than the output number is output during adjustment. When there is an output setting error or a fatal error occurs at the PLC. When the Load is OFF.	
Scaling		Enabled only for conversion time or 1 ms and resolution of 4,000. Setting any values within a range of ±32,000 as the upper and lower limits allows D/A conversion to be executed and analog signals to be output with these values as full scale.	
Ratio conversion function		Stores the results of positive and negative gradient analog inputs calculated for ratio and bias as analog output values. Positive gradient: Analog output = A × Analog input + B (A = 0 to 99.99, B = 8,000 to 7FFF hex) Negative gradient: Analog output = F – A × Analog input + B (A: 0 to 99.99, B = 8,000 to 7FFF hex, F: Output range maximum value)	

1. Input and output signal ranges can be set for each input and output.
2. The accuracy is given for full scale. For example, an accuracy of ±0.2% means a maximum error of ±8 (BCD) at a resolution of 4,000.
3. D/A conversion time is the time required for converting and outputting the PLC data. It takes at least one cycle for the data stored in the PLC to be read by the Analog I/O Unit.
4. When the operation mode for the CPU Unit is changed from RUN mode or MONITOR mode to PROGRAM mode, or when the power is turned ON, the Output Conversion Enable Bit will turn OFF. The output status specified according to the output hold function will be output.
5. By means of the D(m+18) setting, the resolution can be changed to 8,000, and the conversion time can be changed to 500 μs.

9-1-2 I/O Function Block Diagram

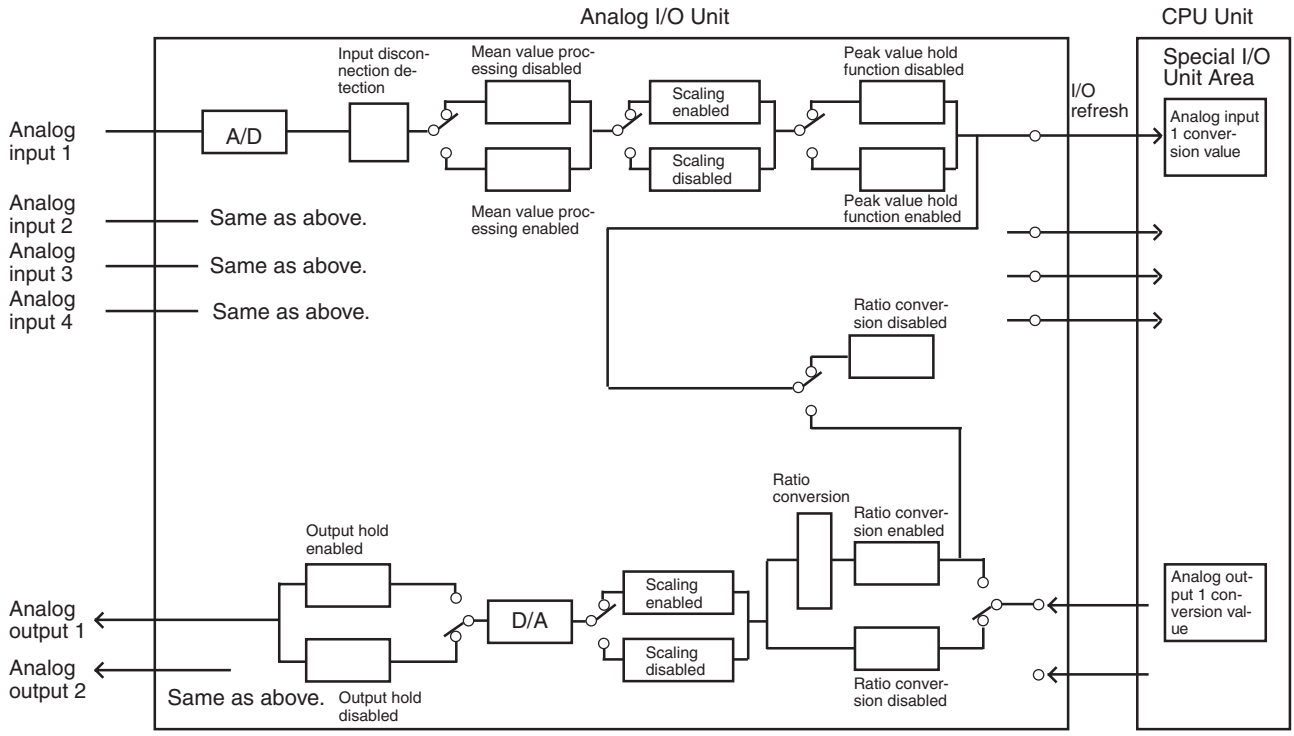

9-1-3 Input Specifications

If signals that are outside the specified range provided below are input, the conversion values used will be at either the maximum or minimum value.

Range: 1 to 5 V (4 to 20 mA)

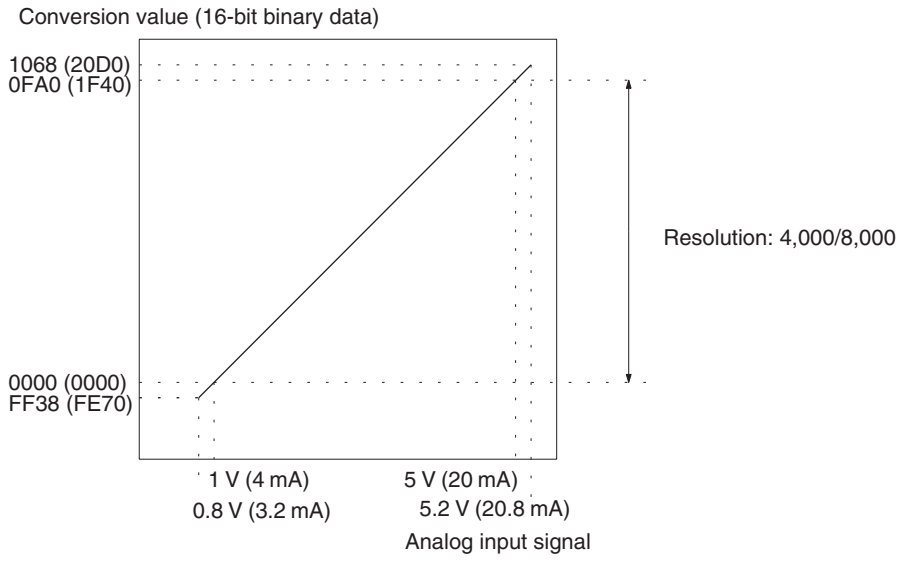

( ): Values in parentheses are for a resolution of 8,000.

Range: 0 to 10 V

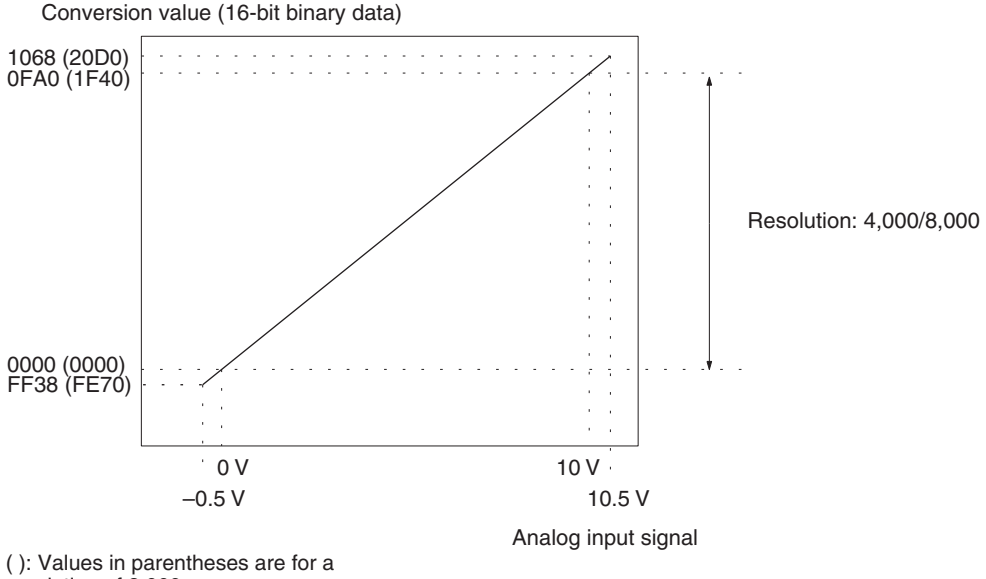

( ): Values in parentheses are for a resolution of 8,000.

Range: 0 to 5 V

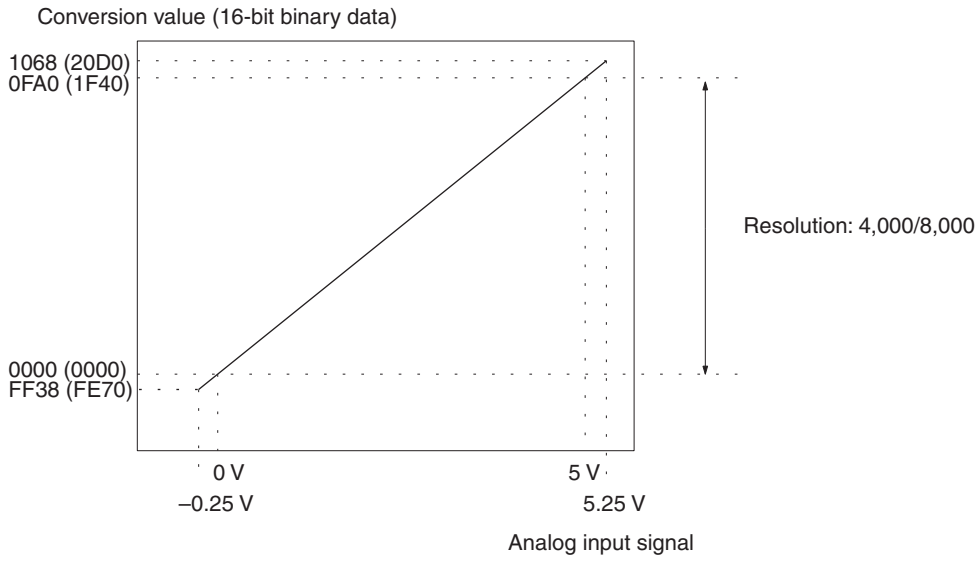

Range: –10 to 10 V

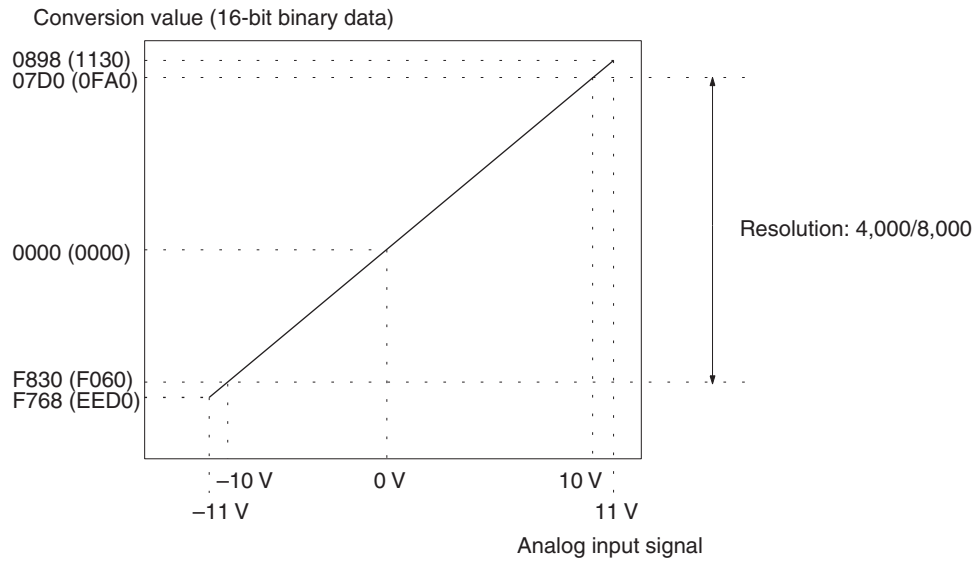

9-1-4 Output Specifications

If the set value is outside the specified range provided below, the output setting will be fixed at the maximum or the minimum value.

Range: 1 to 5 V

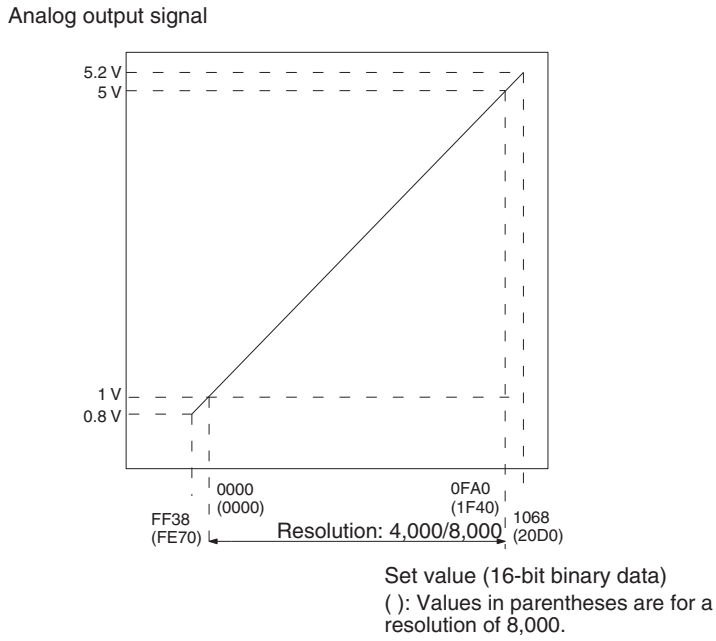

Range: 0 to 10 V

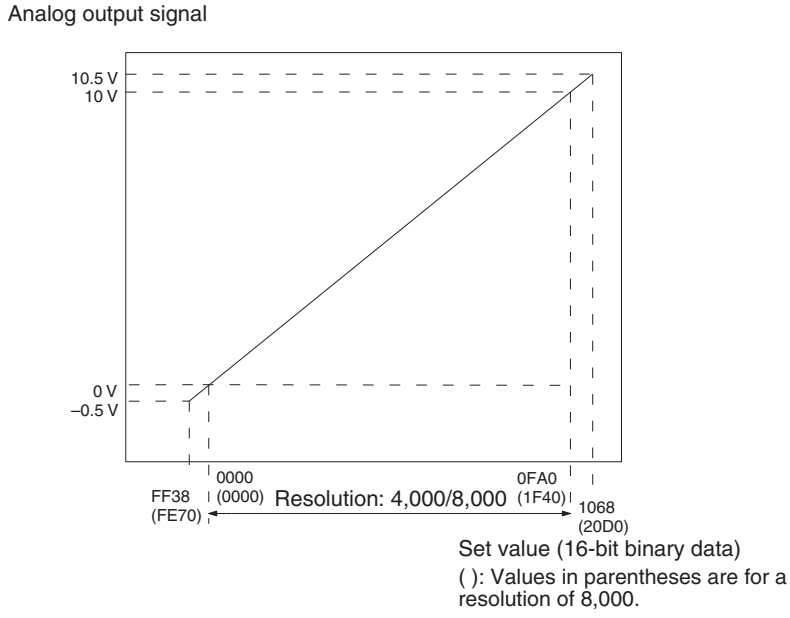

Range: 0 to 5 V

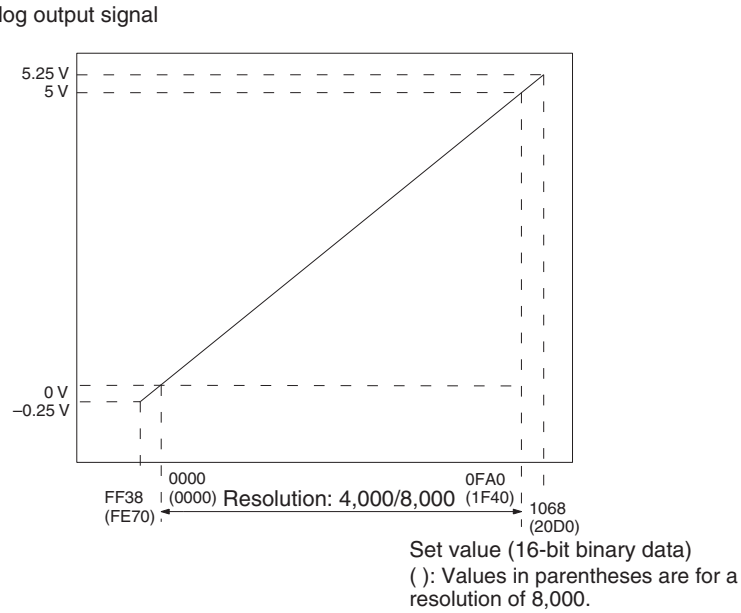

Range: –10 to 10 V

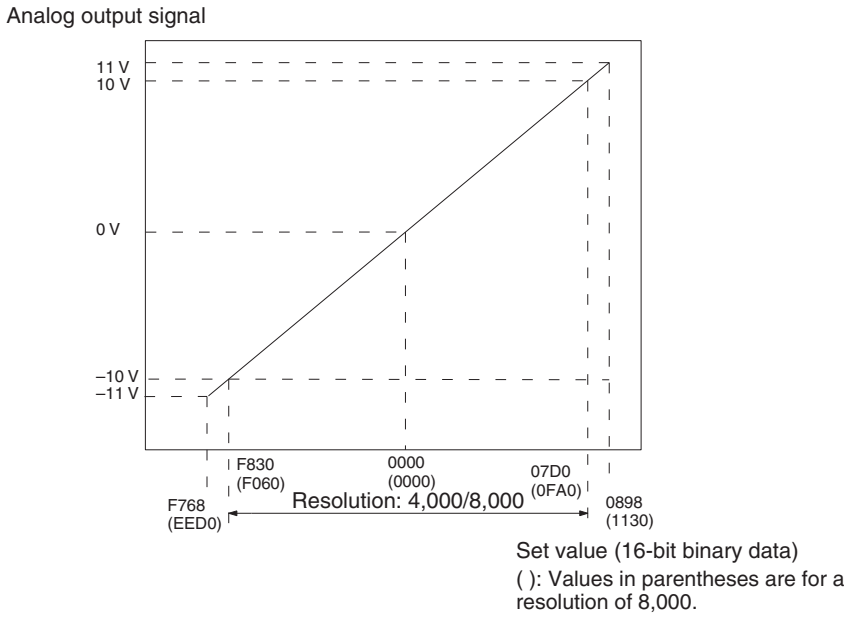

Note The conversion values and set values for a range of –10 to 10 V will be as follows:

16-bit binary data	BCD (Resolution: 4,000)
F768	–2200
:	:
FFFF	–1
0000	0
0001	1
:	:
0898	2200

9-2 Operating Procedure

Follow the procedure outlined below when using Analog I/O Units.

Installation and Settings

1,2,3...

1. Set the voltage/current switch at the back of the terminal block.
2. Wire the Unit.
3. Use the unit number switches on the front panel of the Unit to set the unit number.
4. Turn ON the power to the PLC.
5. Create the I/O tables.
6. Make the Special I/O Unit DM Area settings.
   - Set the I/O numbers to be used.
   - Set the input and output signal ranges.
   - Set the number of mean processing samplings.
   - Set the output hold function
   - Set the scaling function.
   - Set the ratio conversion usage, the ratio set value, and the bias value.
   - Set the conversion time and resolution.
7. Turn the power to the PLC OFF and ON, or turn ON the Special I/O Unit Restart Bit.

When the input or output of the connected devices needs to be calibrated, follow the procedures in *Offset Gain Adjustment* below. Otherwise, skip to *Operation* below.

Offset and Gain Adjustment

1,2,3...

1. Set the voltage/current switch at the back of the terminal block.
2. Turn ON the power to the PLC.
3. Set to adjustment mode in the Special I/O Unit DM Area.
4. Turn the power to the PLC OFF and ON, or turn ON the Special I/O Unit Restart Bit.
5. Adjust the offset and gain.
6. Set to normal mode in the Special I/O Unit DM Area.
7. Restart the Analog I/O Unit by turning ON the Special I/O Unit Restart Bit or turn the power supply to the PLC OFF and ON.

Operation

Ladder program

- Read conversion values or write set values by means of MOV(021) and XFER(070).
- Start and stop conversion output.
- Specify the peak hold function.
- Obtain disconnection notifications and error codes.

9-2-1 Procedure Examples

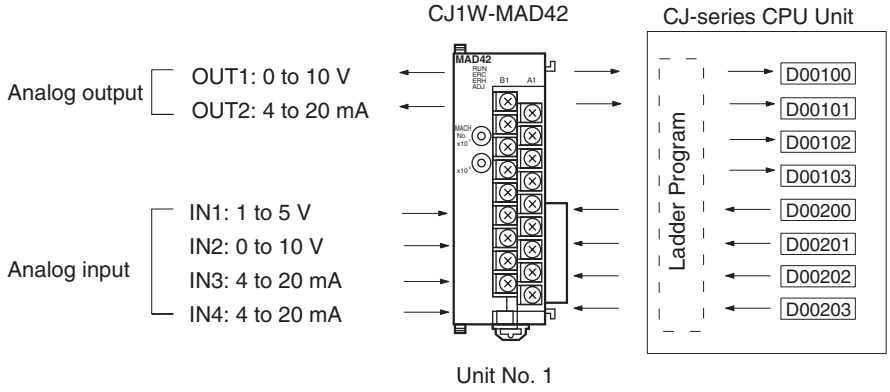

Setting the Analog I/O Unit

1,2,3...

1. Set the voltage/current switch. Refer to *9-3-3 Voltage/Current Switch* for further details.

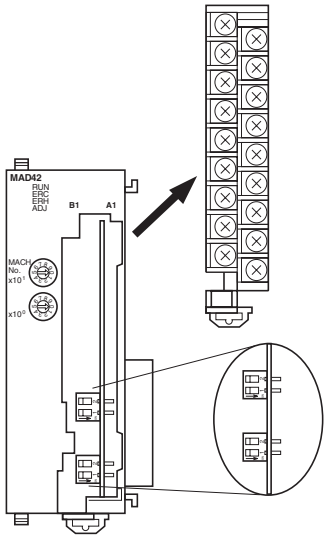

2. Mount and wire the Analog I/O Unit. Refer to *1-2-1 Mounting Procedure*, *9-4 Wiring* or *9-4-4 I/O Wiring Example* for further details.

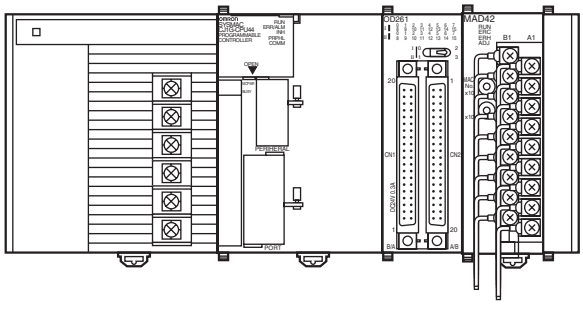

3. Set the unit number switches. Refer to *9-3-2 Unit Number Switches* for further details.

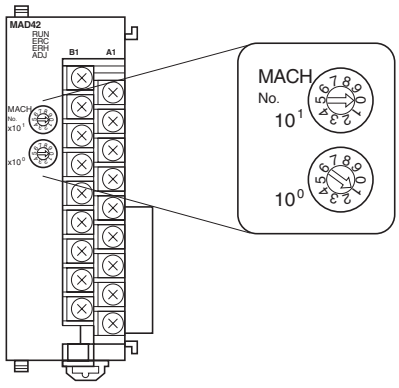

If the unit number is set to 1, words will be allocated to the Analog Input Unit in Special I/O Unit Area CIO 2010 to CIO 2019 and in the Special I/O Unit Area D20100 to D20199.

4. Turn ON the power to the PLC.

Creating I/O Tables

After turning ON the power to the PLC, be sure to create the I/O tables.

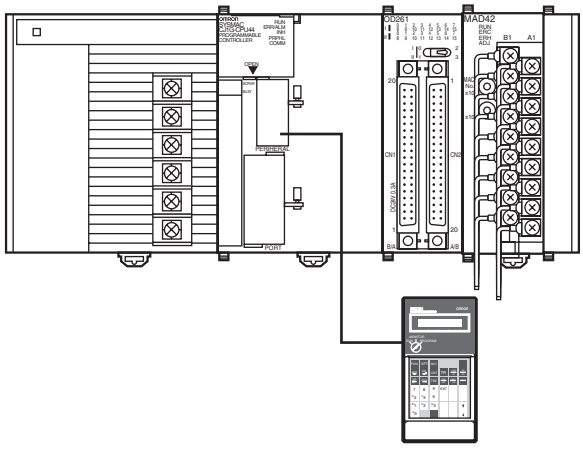

Initial Data Settings

1,2,3... 1. Specify the Special I/O Unit DM Area settings. Refer to *Allocations in DM Area* on page 394 for further details.

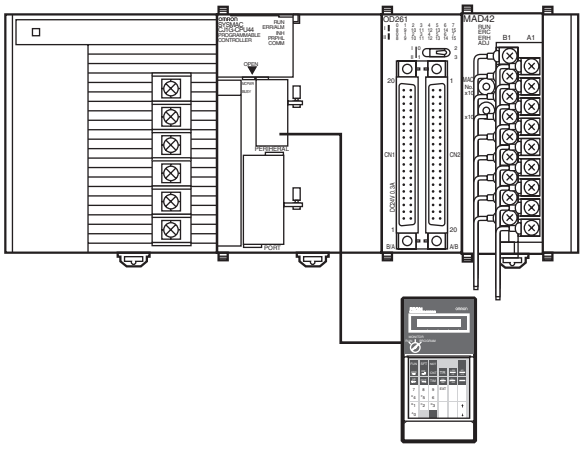

Setting conditions

Unit No. 1

Analog input 1: 1 to 5 V
Analog input 2: 0 to 10 V
Analog input 3: 4 to 20 mA
Analog input 4: 4 to 20 mA

Analog output 1: 0 to 10 V
Analog output 2: 4 to 20 mA

- The following diagram shows the input and output settings used. Refer to *9-6-1 Input Settings and Conversion Values* or *9-7-1 Output Settings and Conversions* for more details.

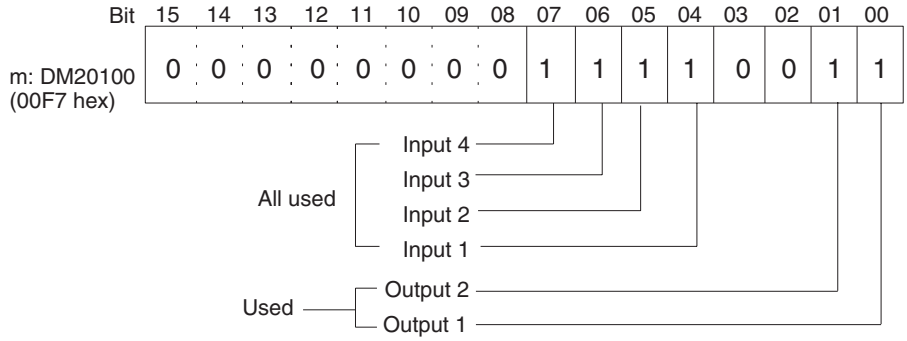

- The following diagram shows the input and output range settings. Refer to *9-6-1 Input Settings and Conversion Values* or *9-7-1 Output Settings and Conversions* for more details.

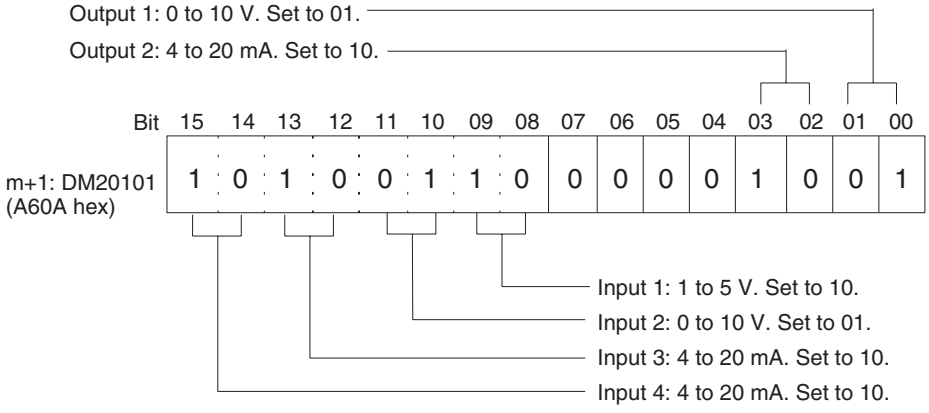

- Set the conversion time and resolution.

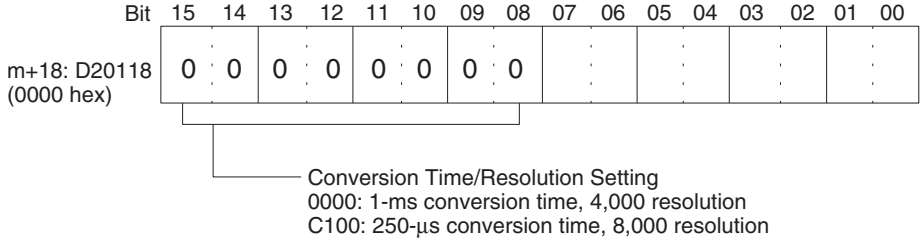

- Set the voltage/current range.

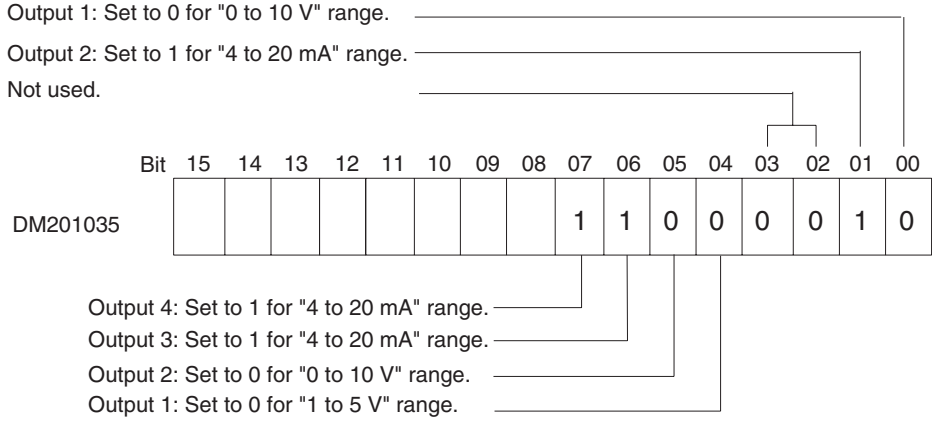

2. Restart the CPU Unit.

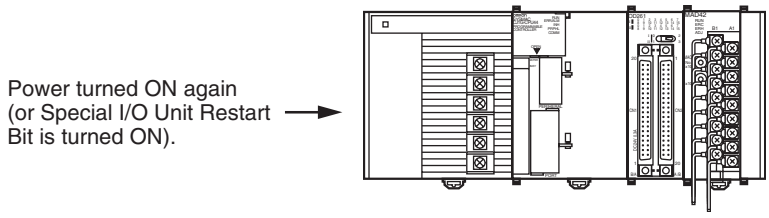

Creating Ladder Programs

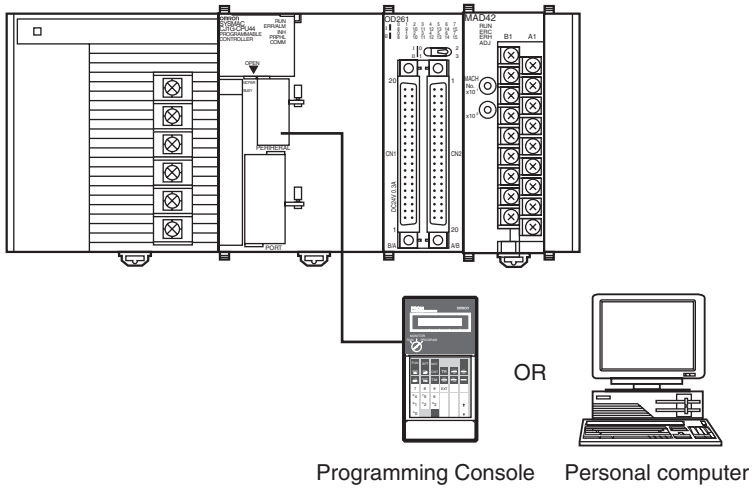

1,2,3... 1. The following example describes how to use analog inputs.

The data that is converted from analog to digital and output to CIO words (n + 5) to (n+8) of the Special I/O Unit Area (CIO 2015 to CIO2018), is stored in the specified addresses D00100 to D00103 as signed binary values 0000 to 0FA0 hex.

- The following table shows the addresses used for analog input.

Input number	Input signal range	Input conversion value address (n = CIO 2010) (See note a.)	Conversion data holding address (See note b.)
1	1 to 5 V	(n+5) = CIO 2015	D00100
2	0 to 10 V	(n+6) = CIO 2016	D00101
3	4 to 20 mA	(n+7) = CIO 2017	D00102
4	4 to 20 mA	(n+8) = CIO 2018	D00103

Note a) The addresses are set according to the unit number of the Special I/O Unit. Refer to *9-3-2 Unit Number Switches* for further details.

b) Set as required.

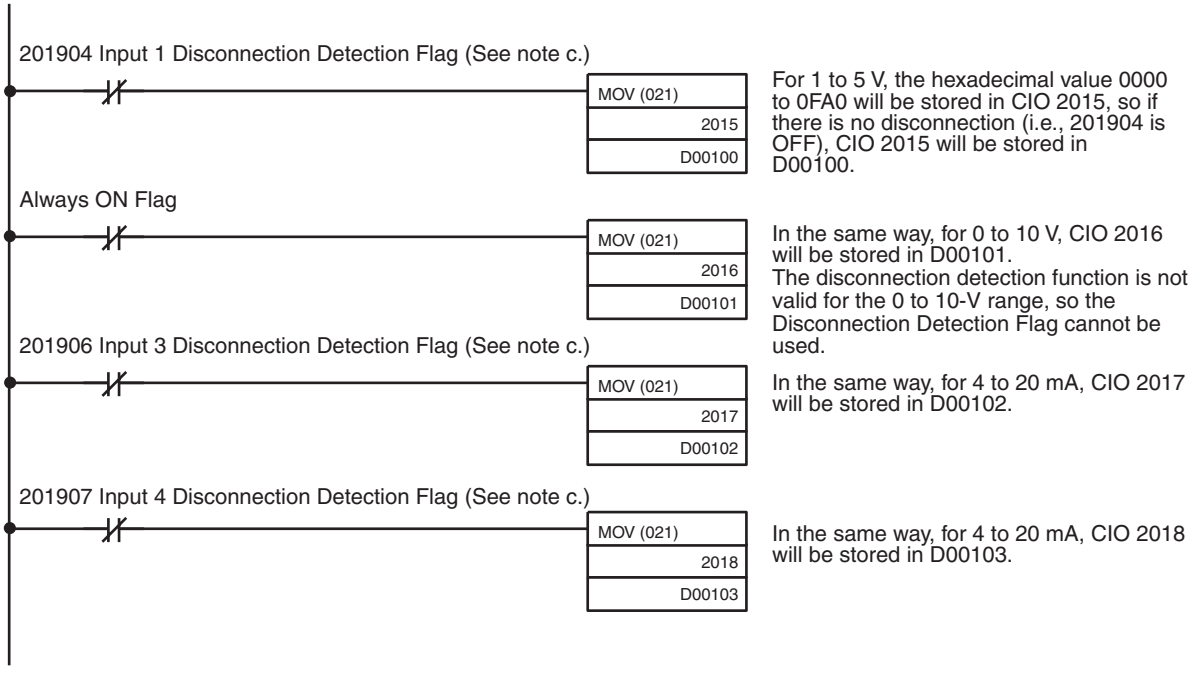

c) The input Disconnection Detection Flag is allocated to bits 04 to 07 of word (n+9). Refer to *Allocations for Normal Mode* on page 398 and *9-6-6 Input Disconnection Detection Function* for further details.

2. The following example shows how to use analog outputs.

The setting address D00200 is stored in words (n+1) to (n+2) of the Special I/O Unit Area (CIO 2011 to CIO 2012) as a signed binary value between 0000 to 0FA0 hex.

- The following table shows the addresses used for analog output.

Output number	Input signal range	Output setting address (n = CIO 2010) (See note a.)	Original conversion address (See note b.)
1	0 to 10 V	(n+1) = CIO 2011	D00200
2	4 to 20 mA	(n+2) = CIO 2012	D00201

Note a) The addresses are set according to the unit number of the Special I/O Unit. Refer to *9-3-2 Unit Number Switches* for further details.

b) Set as required.

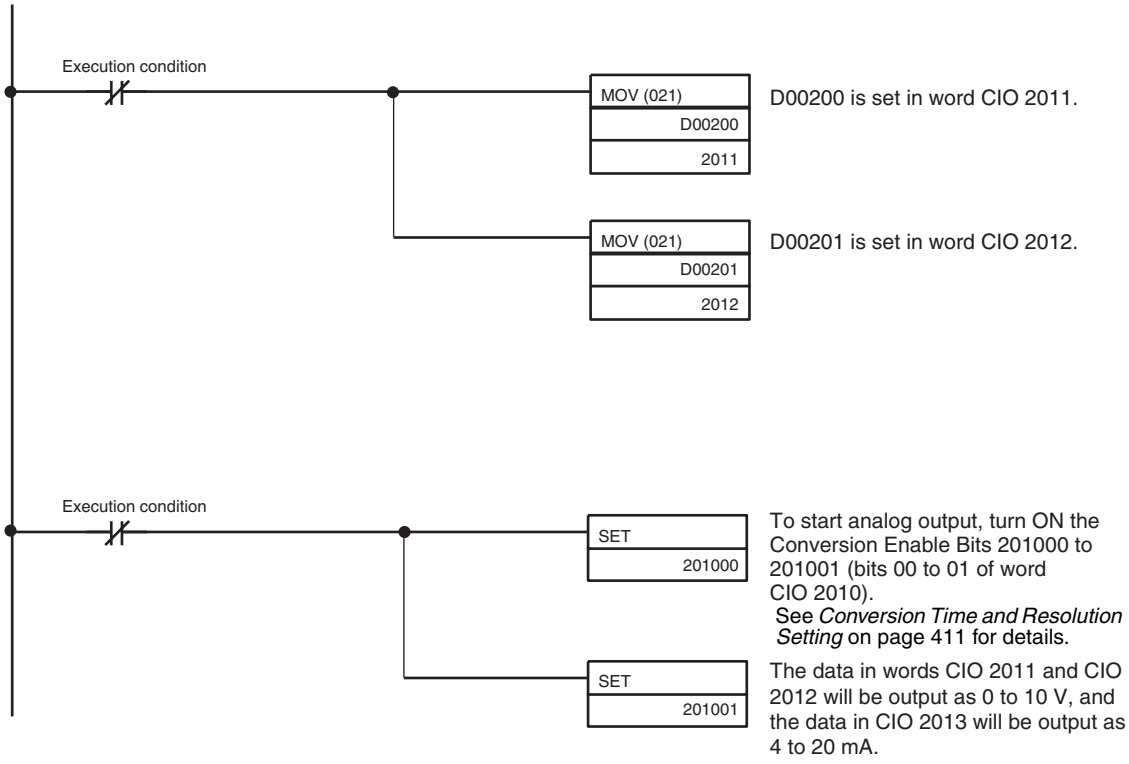

9-3 Components and Switch Settings

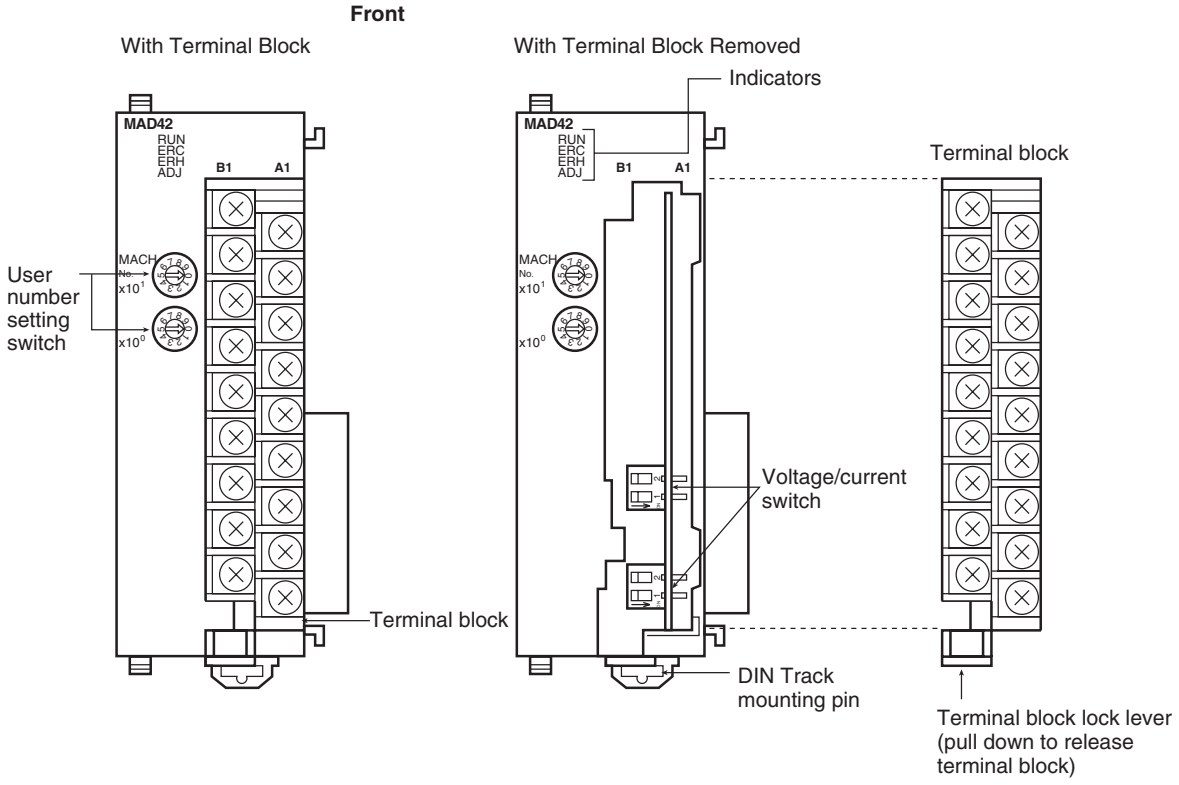

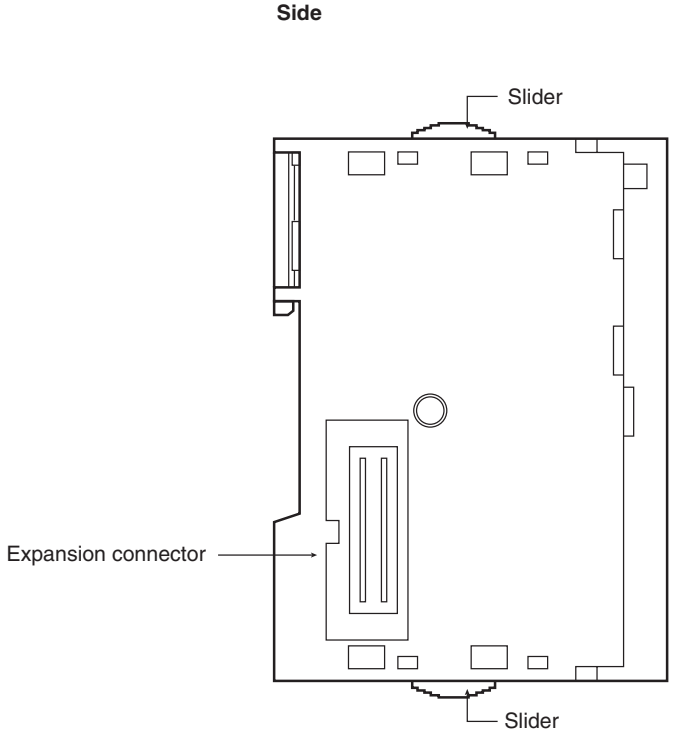

The terminal block is attached using a connector mechanism. It can be removed by lowering the lever at the bottom of the terminal block.

The lever must normally be in the raised position. Confirm this before operation.

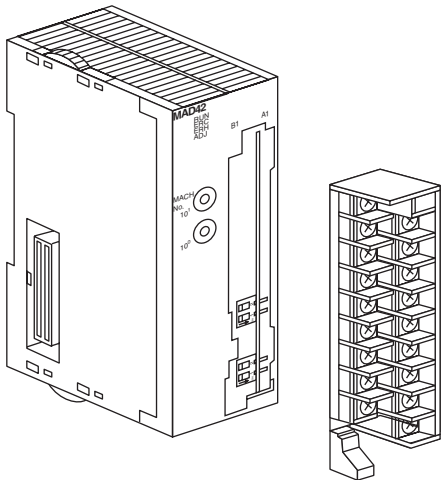

9-3-1 Indicators

The indicators show the operating status of the Unit. The following table shows the meanings of the indicators.

LED	Meaning	Indicator	Operating status
RUN (green)	Operating	Lit	Operating in normal mode.
		Not lit	Unit has stopped exchanging data with the CPU Unit.
ERC (red)	Error detected by Unit	Lit	Alarm has occurred (such as disconnection detection) or initial settings are incorrect.
		Not lit	Operating normally.
ADJ (yellow)	Adjusting	Flashing	Operating in offset/gain adjustment mode.
		Not lit	Other than the above.
ERH (red)	Error in the CPU Unit	Lit	Error has occurred during data exchange with the CPU Unit.
		Not lit	Operating normally.

9-3-2 Unit Number Switches

The CPU Unit and Analog I/O Unit exchange data via the Special I/O Unit Area and the Special I/O Unit DM Area. The Special I/O Unit Area and Special I/O Unit DM Area word addresses that each Analog I/O Unit occupies are set by the unit number switches on the front panel of the Unit.

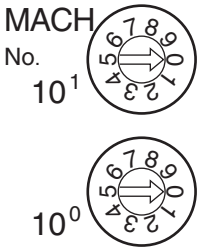

Always turn OFF the power before setting the unit number. Use a flat-blade screwdriver, being careful not to damage the slot in the screw. Be sure not to leave the switch midway between settings.

Switch setting	Unit number	Special/O Unit Area addresses	Special I/O Unit DM Area addresses
0	Unit #0	CIO 2000 to CIO 2009	D20000 to D20099
1	Unit #1	CIO 2010 to CIO 2019	D20100 to D20199
2	Unit #2	CIO 2020 to CIO 2029	D20200 to D20299
3	Unit #3	CIO 2030 to CIO 2039	D20300 to D20399
4	Unit #4	CIO 2040 to CIO 2049	D20400 to D20499
5	Unit #5	CIO 2050 to CIO 2059	D20500 to D20599
6	Unit #6	CIO 2060 to CIO 2069	D20600 to D20699
7	Unit #7	CIO 2070 to CIO 2079	D20700 to D20799
8	Unit #8	CIO 2080 to CIO 2089	D20800 to D20899
9	Unit #9	CIO 2090 to CIO 2099	D20900 to D20999
10	Unit #10	CIO 2100 to CIO 2109	D21000 to D21099
to	to	to	to
n	Unit #n	CIO 2000 + (n × 10) to CIO 2000 + (n × 10) + 9	D20000 + (n × 100) to D20000 + (n × 100) + 99
to	to	to	to
95	Unit #95	CIO 2950 to CIO 2959	D29500 to D29599

Note If two or more Special I/O Units are assigned the same unit number, a “UNIT No. DPL ERR” error (in the Programming Console) will be generated (A40113 will turn ON) and the PLC will not operate.

9-3-3 Voltage/Current Switch

The analog conversion input can be switched from voltage input to current input by changing the pin settings on the voltage/current switch located on the back of the terminal block.

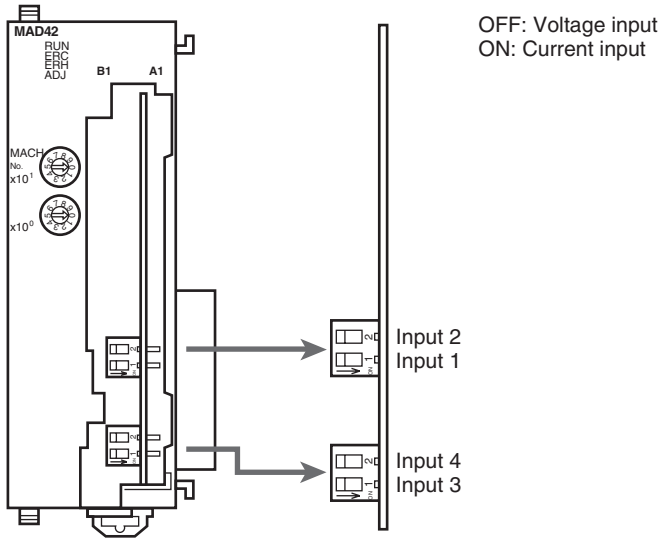

⚠ **Caution** Be sure to turn OFF the power to the PLC before mounting or removing the terminal block.

9-4 Wiring

9-4-1 Terminal Arrangement

The signal names corresponding to the connecting terminals are as shown in the following diagram.

Voltage output 2 (+)	B1
Output 2 (–)	B2
Current output 2 (+)	B3
N.C.	B4
Input 2 (+)	B5
Input 2 (–)	B6
AG	B7
Input 4 (+)	B8
Input 4 (–)	B9

A1	Voltage output 1 (+)
A2	Output 1 (–)
A3	Current output 1 (+)
A4	N.C.
A5	Input 1 (+)
A6	Input 1 (–)
A7	AG
A8	Input 3 (+)
A9	Input 3 (–)

Note

1. The analog I/O numbers that can be used are set in the Data Memory (DM).
2. The I/O signal ranges for individual inputs and outputs are set in the Data Memory (DM). They can be set in units of I/O numbers.
3. The AG terminal (A7, B7) is connected to the 0-V analog circuit in the Unit. Connecting shielded input lines can improve noise resistance.
4. The N.C. terminals (A4, B4) are not connected to internal circuitry.

9-4-2 Internal Circuitry

The following diagrams show the internal circuitry of the analog I/O section.

Input Circuitry

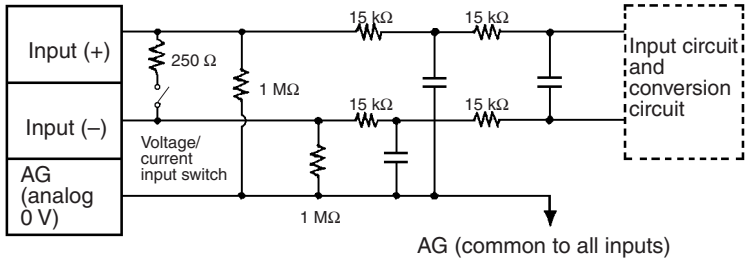

Output Circuitry

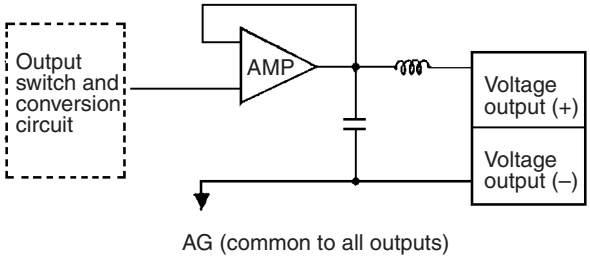

Current Output Circuitry

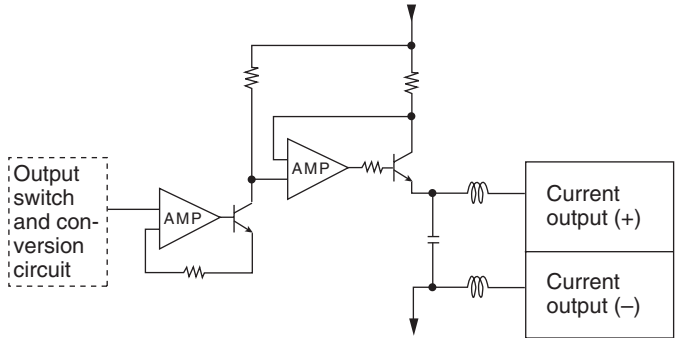

Internal Configuration

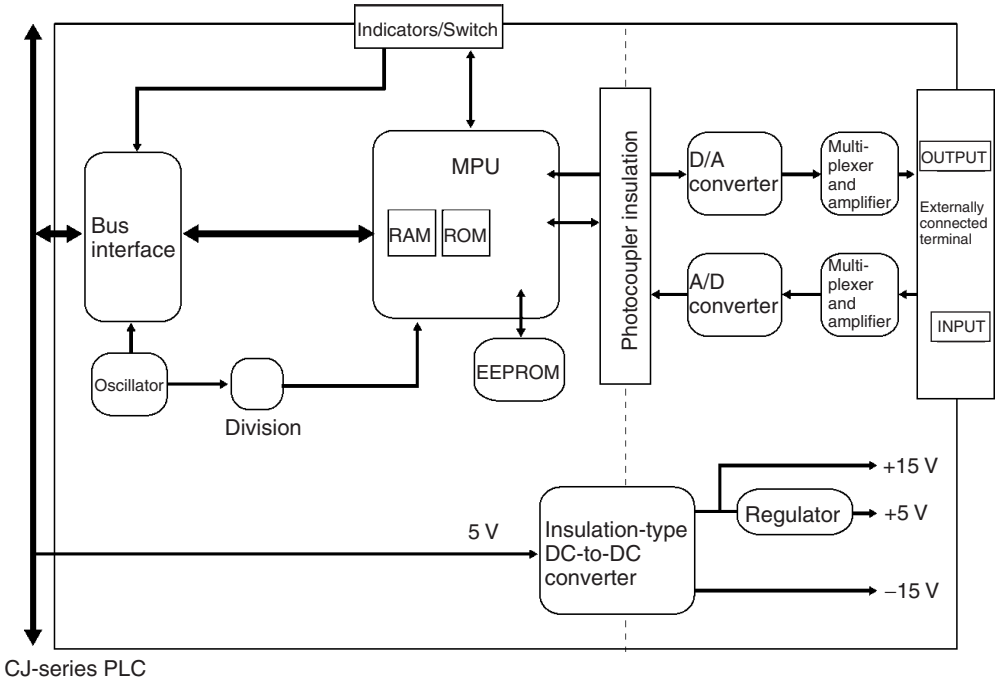

9-4-3 Voltage Input Disconnection

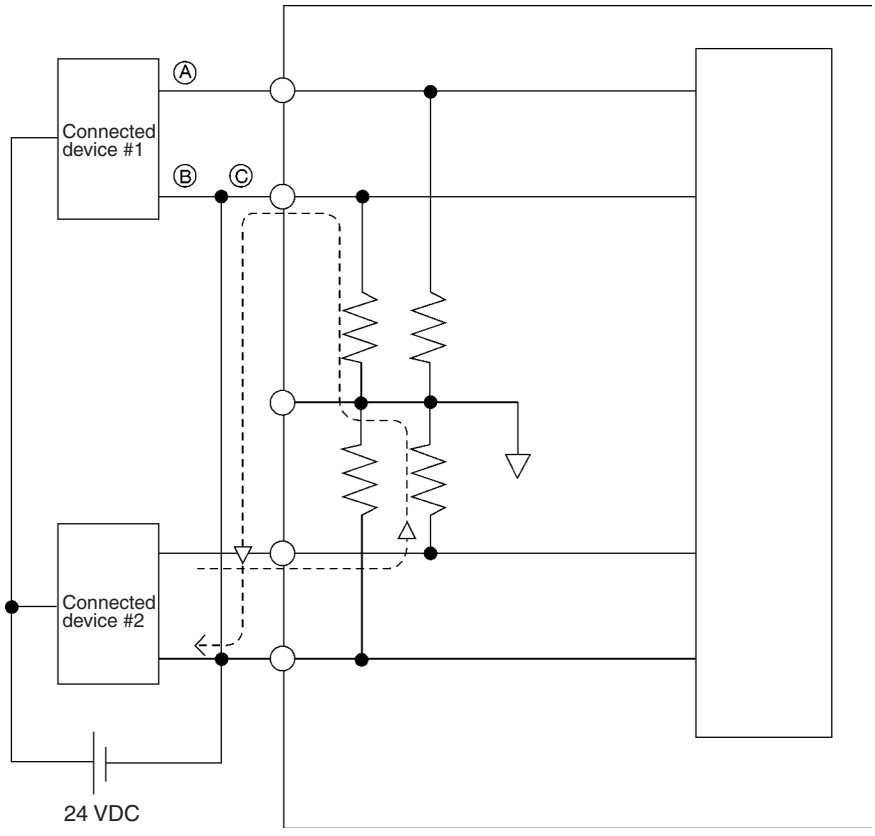

Note If the connected device #2 in the above example outputs 5 V and the power supply is shared by 2 channels as shown in the above diagram, approximately one third of the voltage, or 1.6 V, will be input at input 1.

When voltage inputs are used and a disconnection occurs, separate the power supply at the side of the connected devices or use an insulating device (isolator) for each input to avoid the following problems.

When the power supply at the connected devices is shared and section A or B is disconnected, power will flow in the direction of the broken line and the output voltage of the other connected devices will be reduced to between a third to a half of the voltage. If 1 to 5 V is used and the reduced voltage output, disconnection may not be detectable. If section C is disconnected, the power at the (–) input terminal will be shared and disconnection will not be detectable.

For current inputs, sharing the power supply between the connected devices will not cause any problems.

9-4-4 I/O Wiring Example

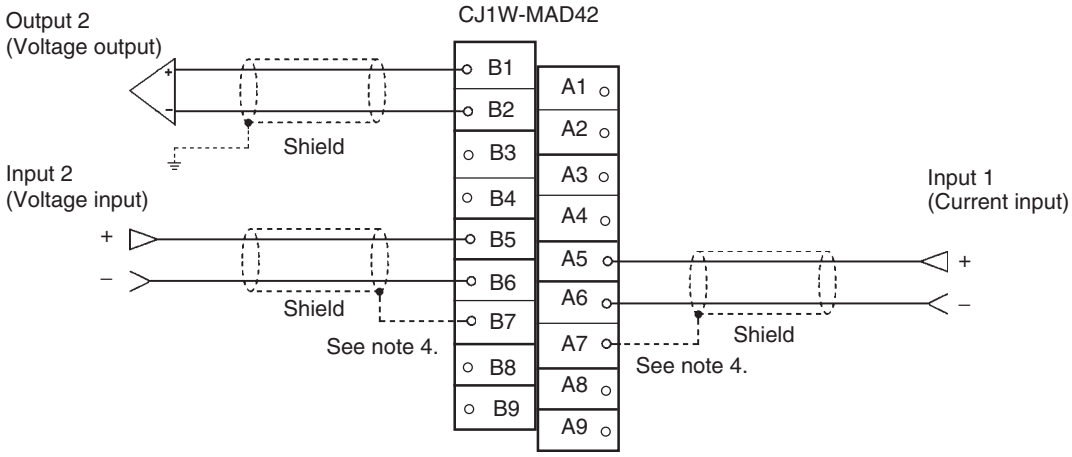

Note

1. When using current inputs, pins IN1 of the voltage/current switch must be set to ON. Refer to *9-3-3 Voltage/Current Switch* for further details. Also set the voltage and current ranges in D (m+35) in the DM Area.
2. For inputs that are not used, either set to “0: Not used” in the input number settings (refer to *9-6-1 Input Settings and Conversion Values*) or short-circuit the voltage input terminals (V+) and (V–).
3. Crimp-type terminals must be used for terminal connections, and the screws must be tightened securely. Use M3 screws and tighten them to a torque of 0.5 N·m.
4. When connecting the shield of the analog input cables to the Unit’s AG terminals (A7, B7), as shown in the previous diagram, use a wire that is 30 cm max. in length if possible.

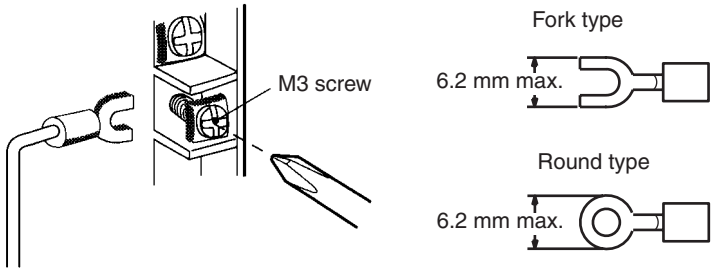

Note Connecting shielded cable to the Unit’s AG terminals (A7, B7) can improve noise resistance.

To minimize output wiring noise, ground the output signal line to the input device.

9-4-5 I/O Wiring Considerations

When wiring inputs, apply the following points to avoid noise interference and optimize Analog I/O Unit performance.

- Use two-core shielded twisted-pair cables for external connections.
- Route I/O cables separately from the AC cable, and do not run the Unit's cables near a main circuit cable or a high voltage cable. Do not insert output cables into the same duct.
- If there is noise interference from power lines (if, for example, the power supply is shared with electrical welding devices or electrical discharge machines, or if there is a high-frequency generation source nearby) install a noise filter at the power supply input area.

9-5 Exchanging Data with the CPU Unit

9-5-1 Outline of Data Exchange

Data is exchanged between the CPU Unit and the CJ1W-MAD42 Analog I/O Unit via the Special I/O Unit Area (for data used to operate the Unit) and the Special I/O Unit DM Area (for data used for initial settings).

I/O Refresh Data

Analog input conversion values, analog output set values, and other data used to operate the Unit are allocated in the Special I/O Unit Area of the CPU Unit according to the unit number, and are exchanged during I/O refreshing.

Fixed Data

The Unit's fixed data, such as the analog input signal ranges and analog output signal ranges, is allocated in the Special I/O Unit DM Area of the CPU Unit according to the unit number, and is exchanged when the power is turned ON or the Unit is restarted.

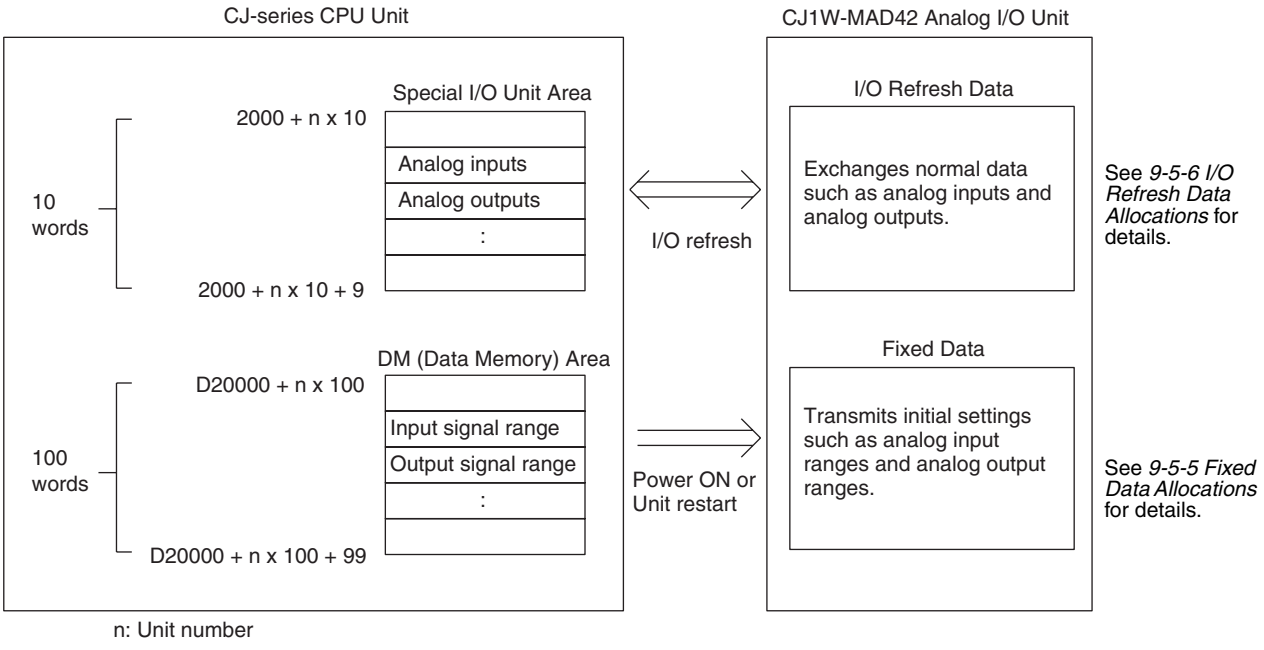

9-5-2 Unit Number Settings

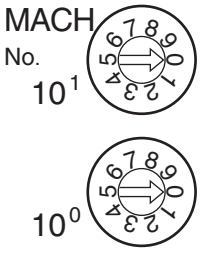

The Special I/O Unit Area and Special I/O Unit DM Area word addresses that each Analog I/O Unit occupies are set by the unit number switches on the front panel of the Unit.

Switch setting	Unit number	Special/O Unit Area addresses	Special I/O Unit DM Area addresses
0	Unit #0	CIO 2000 to CIO 2009	D20000 to D20099
1	Unit #1	CIO 2010 to CIO 2019	D20100 to D20199
2	Unit #2	CIO 2020 to CIO 2029	D20200 to D20299
3	Unit #3	CIO 2030 to CIO 2039	D20300 to D20399
4	Unit #4	CIO 2040 to CIO 2049	D20400 to D20499
5	Unit #5	CIO 2050 to CIO 2059	D20500 to D20599
6	Unit #6	CIO 2060 to CIO 2069	D20600 to D20699
7	Unit #7	CIO 2070 to CIO 2079	D20700 to D20799
8	Unit #8	CIO 2080 to CIO 2089	D20800 to D20899
9	Unit #9	CIO 2090 to CIO 2099	D20900 to D20999
10	Unit #10	CIO 2100 to CIO 2109	D21000 to D21099
to	to	to	to
n	Unit #n	CIO 2000 + (n × 10) to CIO 2000 + (n × 10) + 9	D20000 + (n × 100) to D20000 + (n × 100) + 99
to	to	to	to
95	Unit #95	CIO 2950 to CIO 2959	D29500 to D29599

Note If two or more Special I/O Units are assigned the same unit number, a “UNIT No. DPL ERR” error (in the Programming Console) will be generated (A40113 will turn ON) and the PLC will not operate.

9-5-3 Operation Mode Setting

The operation mode can be switched between normal mode and adjustment mode (for offset gain adjustment) by changing the setting in bits 00 to 07 of D(m+18).

Settings in D(m+18)

DM word	Bits															
	15	14	13	12	11	10	9	8	7	6	5	4	3	2	1	0
D(m+18)	Conversion time/resolution setting								Operation mode setting 00: Normal mode C1: Adjustment mode							

m = D20000 + (unit number × 100)

9-5-4 Special I/O Unit Restart Bits

To restart the Unit operations after changing the contents of the data memory or correcting an error, turn ON the power to the PLC again or turn the Special I/O Unit Restart Bit ON and then OFF again.

Special I/O Unit Area word address	Function	
A50200	Unit No. 0 Restart Bit	Restarts the Unit when turned ON and then OFF again.
A50201	Unit No. 1 Restart Bit	
to	to	
A50215	Unit No. 15 Restart Bit	
A50300	Unit No. 16 Restart Bit	
to	to	
A50715	Unit No. 95 Restart Bit	

Note If the error is not corrected by restarting the Unit or turning the Special I/O Unit Restart Bit ON and then OFF again, replace the Analog I/O Unit.

9-5-5 Fixed Data Allocations

Allocations in DM Area

The initial settings of the Analog I/O Unit are set according to the data allocated in the Special I/O Unit DM Area. Settings, such as the inputs and outputs used, the analog input signal range, and analog output signal range must be set in this area.

SYSMAC CJ-series CPU Unit

(Special I/O Unit DM Area)

	Word
Unit #0	D20000 to D20099
Unit #1	D20100 to D20199
Unit #2	D20200 to D20299
Unit #3	D20300 to D20399
Unit #4	D20400 to D20499
Unit #5	D20500 to D20599
Unit #6	D20600 to D20699
Unit #7	D20700 to D20799
Unit #8	D20800 to D20899
Unit #9	D20900 to D20999
Unit #10	D21000 to D21099
to	to
Unit #n	D20000 + (n × 100) to D20000 + (n × 100) + 99
to	to
Unit #95	D29500 to D29599

Data is automatically transferred to each unit number when the power is turned ON, or when the Special I/O Unit Restart Bit is turned ON.

CJ1W-MAD42 Analog I/O Unit

(Fixed Data Area)

D (m)	I/O conversion permission loop mode setting
D (m+1)	I/O signal range
D (m+2 to m+3)	Output hold function setting
D (m+6 to m+9)	Sets number of samples for mean value processing
D (m+10 to m+13)	Ratio set value, bias value setting
D (m+18)	Conversion time/resolution setting and operation mode setting
D (m+19 to m+22)	Output scaling function setting (Only when conversion time is 1 ms and resolution is 4,000.)
D (m+27 to m+34)	Input scaling function setting (Only when conversion time is 1 ms and resolution is 4,000.)
D (m+35)	Voltage/current range setting (Only for 1 to 5 V and 4 to 20 mA.)

m = 20000 + (unit number × 100)

Note

1. The Special I/O Unit DM Area words that are occupied by the Analog I/O Unit are set using the unit number switches on the front panel of the Unit. Refer to *9-3-2 Unit Number Switches* for details on the method used to set the unit number switches.
2. If two or more Special I/O Units are assigned the same unit number, a “UNIT No. DPL ERR” error (in the Programming Console) will be generated (A40113 will turn ON) and the PLC will not operate.

Allocations in DM Area

The following table shows the allocation of DM words and bits for both normal and adjustment mode.

DM word	Bits															
	15	14	13	12	11	10	9	8	7	6	5	4	3	2	1	0
D (m)	Ratio conversion use setting								Input use setting				Output use setting			
	Not used.		Not used.		Loop 2		Loop 1		Input 4	Input 3	Input 2	Input 1	Not used.	Not used.	Out-put 2	Out-put 1
D (m+1)	Input signal range setting								Output signal range setting							
	Input 4		Input 3		Input 2		Input 1		Not used.		Not used.		Output 2		Output 1	
D (m+2)	Not used.								Output 1: Output status when conversion stopped							
D (m+3)	Not used.								Output 2: Output status when conversion stopped							
D (m+4)	Not used.															
D (m+5)	Not used.															
D (m+6)	Input 1: Mean value processing setting															
D (m+7)	Input 2: Mean value processing setting															
D (m+8)	Input 3: Mean value processing setting															
D (m+9)	Input 4: Mean value processing setting															
D (m+10)	Loop 1 (input 1 to output 1), A constant															
D (m+11)	Loop 1 (input 1 to output 1), B constant															
D (m+12)	Loop 2 (input 2 to output 2), A constant															
D (m+13)	Loop 2 (input 2 to output 2), B constant															
D (m+14)	Not used.															
D (m+15)	Not used.															
D (m+16)	Not used.															
D (m+17)	Not used.															
D (m+18)	Conversion time and resolution setting								Operation mode setting							
D (m+19)	Output 1 scaling lower limit (Enabled only for conversion time of 1 ms and resolution of 4,000.)															
D (m+20)	Output 1 scaling upper limit (Enabled only for conversion time of 1 ms and resolution of 4,000.)															
D (m+21)	Output 2 scaling lower limit (Enabled only for conversion time of 1 ms and resolution of 4,000.)															
D (m+22)	Output 2 scaling upper limit (Enabled only for conversion time of 1 ms and resolution of 4,000.)															
D (m+23)	Not used.															
D (m+24)	Not used.															
D (m+25)	Not used.															
D (m+26)	Not used.															
D (m+27)	Input 1 scaling lower limit															
D (m+28)	Input 1 scaling upper limit															
D (m+29)	Input 2 scaling lower limit															
D (m+30)	Input 2 scaling upper limit															
D (m+31)	Input 3 scaling lower limit															
D (m+32)	Input 3 scaling upper limit															
D (m+33)	Input 4 scaling lower limit															
D (m+34)	Input 4 scaling upper limit															
D (m+35)	Voltage/current range setting (Enabled only when set for 1 to 5 V, 4 to 20 mA)															
	Not used.								Input 4	Input 3	Input 2	Input 1	Not used.		Out-put 2	Out-put 1

Set Values and Stored Values

Item		Contents	Page
Input	Use setting	0: Not used. 1: Used.	400
	Input signal range	00: –10 to 10 V 01: 0 to 10 V 10: 1 to 5 V, 4 to 20 mA (See note 1.) 11: 0 to 5 V	400
	Voltage/current range setting	0: Voltage range (1 to 5 V) 1: Current range (4 to 20 mA)	
	Mean value processing setting	0000: Mean value processing with 2 buffers (See note 3.) 0001: No mean value processing 0002: Mean value processing with 4 buffers 0003: Mean value processing with 8 buffers 0004: Mean value processing with 16 buffers 0005: Mean value processing with 32 buffers 0006: Mean value processing with 64 buffers	402
	Scaling setting	Set any value in binary data from -32,000 (8,300) to +32,000 (7D00), except when upper limit = lower limit (not 0000).	
Output	Use setting	0: Not used. 1: Used.	409
	Output signal range	00: –10 to 10 V 01: 0 to 10 V 10: 1 to 5 V, 4 to 20 mA 11: 0 to 5 V	410
	Voltage/current range setting	0: Voltage range (1 to 5 V) 1: Current range (4 to 20 mA)	
	Output status when stopped	00: CLR Outputs 0 or minimum value of each range. (See note 2.) 01: HOLD Holds output just before stopping. 02: MAX Outputs maximum value of range.	412
	Scaling setting	Set any value in binary data from –32,000 (8,300) to +32,000 (7D00), except when upper limit = lower limit (not 0000).	
Loop	Ratio conversion use setting	00: Not used. 01: Uses positive gradient conversion. 10: Uses negative gradient conversion. 11: Same as for setting “00” above.	415
	A constant	4 digits BCD (0 to 9999)	
	B constant	16-bit binary data	
Conversion time/resolution setting (for inputs and outputs)		00: Conversion time of 1 ms and resolution of 4,000 C1: Conversion time of 500 μs and resolution of 8,000	402

Note

1. The input signal range of “1 to 5 V” and “4 to 20 mA” is switched using the pins of the voltage/current switch. Refer to *9-3-3 Voltage/Current Switch* for details.
2. For the range of ±10 V, the output is 0 V. For other output signal ranges, the minimum value of each signal range is output. Refer to *9-7-3 Output Hold Function* for details.
3. The default setting for mean value processing is to use two buffers.

9-5-6 I/O Refresh Data Allocations

Special I/O Unit Area Allocation and Contents

I/O refresh data for the Analog I/O Unit is exchanged according to the allocations in the Special I/O Unit Area. Analog input converted values and analog output set values are exchanged with the CPU Unit at I/O refresh.

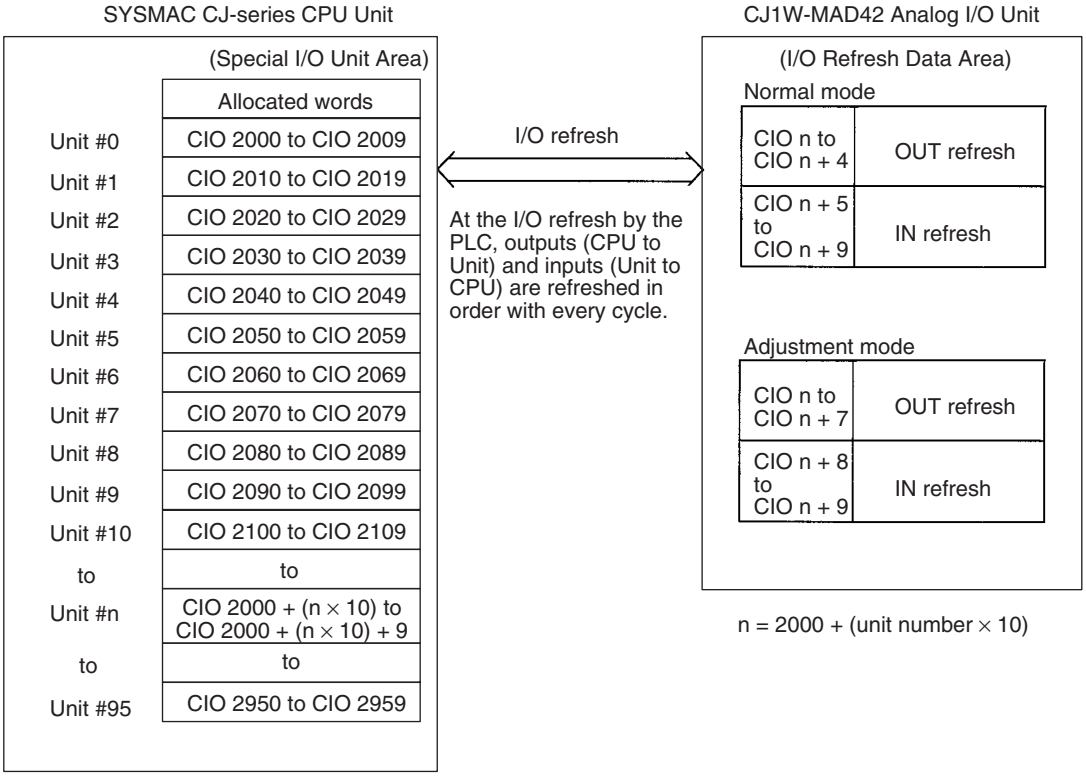

Note

1. The Special I/O Unit Area words that are occupied by the Analog I/O Unit are set using the unit number switches on the front panel of the Unit. Refer to *9-3-2 Unit Number Switches* for details on the method used to set the unit number switches.
2. If two or more Special I/O Units are assigned the same unit number, a “UNIT No. DPL ERR” error (in the Programming Console) will be generated (A40113 will turn ON) and the PLC will not operate.

Allocations for Normal Mode

For normal mode, set bits 00 to 07 in D(m+18) to 00 hex.

The allocation of words and bits in the CIO Area is shown in the following table.

I/O	Word	Bits															
		15	14	13	12	11	10	9	8	7	6	5	4	3	2	1	0
Output (CPU to Unit)	n	Not used.								Peak value hold				Not used.		Conversion enable	
										Input 4	Input 3	Input 2	Input 1			Output 2	Output 1
	n + 1	Output 1 set value															
		16^3				16^2				16^1				16^0			
	n + 2	Output 2 set value															
	n + 3	Not used.															
	n + 4	Not used.															
Input (Unit to CPU)	n + 5	Input 1 conversion value / Loop 1 calculation result															
		16^3				16^2				16^1				16^0			
	n + 6	Input 2 conversion value / Loop 2 calculation result															
	n + 7	Input 3 conversion value															
	n + 8	Input 4 conversion value															
	n + 9	Alarm Flags								Disconnection detection						Output setting error	
										Input 4	Input 3	Input 2	Input 1			Output 2	Output 1

Set Values and Stored Values

I/O	Item	Contents	Page
Input	Peak value hold function	0: Not used. 1: Peak value hold used.	405
	Conversion value Calculation result	16-bit binary data	401
	Disconnection detection	0: No disconnection 1: Disconnection	408
Output	Conversion enable	0: Conversion output stopped. 1: Conversion output begun.	411
	Set value	16-bit binary data	410
	Output setting error	0: No error 1: Output setting error	414
Common	Alarm Flags	Bits 00 to 03: Output set value error Bits 04 to 07: Input disconnection detection Bit 08: Ratio conversion use setting error; scaling data error Bit 09: Ratio set value error Bit 10: Output hold setting error Bit 11: Mean value processing setting error Bit 12: Conversion time/resolution; operation mode setting error Bit 15: Operating in adjustment mode. (Always 0 in normal mode.)	436 437

Note For the CIO word addresses, n = CIO 2000 + unit number × 10.

The input disconnection detection function can be used when the input signal range is set for 1 to 5 V (4 to 20 mA).

Input signal range	Voltage/current
1 to 5 V	0.3 V max.
4 to 20 mA	1.2 mA max.

Allocation for Adjustment Mode

For adjustment mode, set bits 00 to 07 in D (m+18) to 01 hex.

The allocation of CIO words and bits is shown in the following table.

I/O	Word	Bits															
		15	14	13	12	11	10	9	8	7	6	5	4	3	2	1	0
Output (CPU to Unit)	n	Not used.								Inputs and outputs to be adjusted							
										16^1				16^0			
	n + 1	Not used.								Not used.		Clr	Set	Up	Down	Gain	Off-set
	n + 2	Not used.															
	n + 3	Not used.															
	n + 4	Not used.															
	n + 5	Not used.															
	n + 6	Not used.															
	n + 7	Not used.															
Input (Unit to CPU)	n + 8	Conversion value or set value at time of adjustment															
		16^3				16^2				16^1				16^0			
	n + 9	Alarm Flags								Disconnection detec-tion				Not used.			
										Input 4	Input 3	Input 2	Input 1				

Set Values and Stored Values

Refer to *9-9-1 Adjustment Mode Operational Flow* for further details.

Item	Contents
Input or output to be adjusted	Sets input or output to be adjusted. Leftmost digit: 1 (output) or 2 (input) Rightmost digit: 1 to 2 (output)/ 1 to 4 (input)
Offset (Offset Bit)	When ON, adjusts offset error.
Gain (Gain Bit)	When ON, adjusts gain error.
Down (Down Bit)	Decrements the adjustment value while ON.
Up (Up Bit)	Increments the adjustment value while ON.
Set (Set Bit)	Sets adjusted value and writes to EEPROM.
Clr (Clear Bit)	Clears adjusted value. (Returns to default status)
Conversion value for adjustment	The conversion value for adjustment is stored as 16 bits of binary data.
Disconnection detection	0: No disconnection 1: Disconnection
Alarm Flags	Bit 12: Input value is outside adjustment limits (in adjustment mode) Bit 13: I/O number setting error (in adjustment mode) Bit 14: EEPROM write error (in adjustment mode) Bit 15: Operating in adjustment mode. (Always ON in adjustment mode.)

Note For the CIO word addresses, n = CIO 2000 + (unit number × 10).

The input disconnection detection function can be used when the input signal range is set for 1 to 5 V (4 to 20 mA).

Input signal range	Voltage/current
1 to 5 V	0.3 V max.
4 to 20 mA	1.2 mA max.

9-6 Analog Input Functions and Operating Procedures

9-6-1 Input Settings and Conversion Values

Setting Inputs and Signal Ranges

Input Numbers

The Analog I/O Unit converts only analog inputs specified by input numbers 1 to 4. To specify the analog inputs to be used, turn ON from a Programming Device the D(m) bits in the DM Area shown in the following diagram.

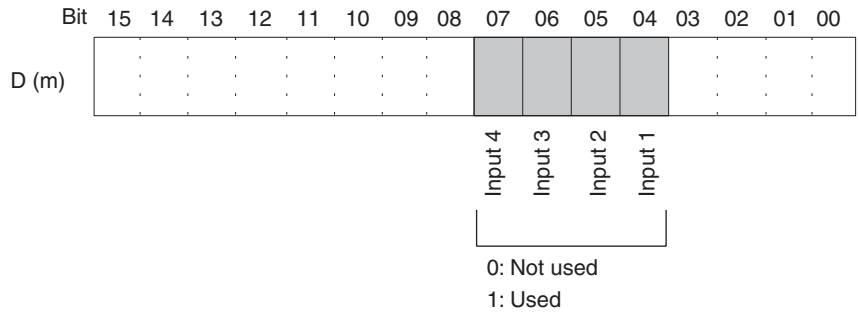

The analog input sampling interval can be shortened by setting any unused input numbers to 0.

Sampling interval = (1 ms) (See note.) x (Number of inputs used)

For the DM word addresses, m = D20000 + (unit number × 100)

The word for inputs that have been set to “Not used” will always be “0000.”

Note This value will be 500 μs when the setting is for 500 μs and a resolution of 8,000.

Input Signal Range

Any of four types of input signal range (–10 to 10 V, 0 to 10 V, 1 to 5 V, and 4 to 20 mA) can be selected for each of the inputs (i.e., input numbers 1 to 4). To specify the input signal range for each input, set from a Programming Device the D(m+1) bits in the DM Area as shown in the following diagram.

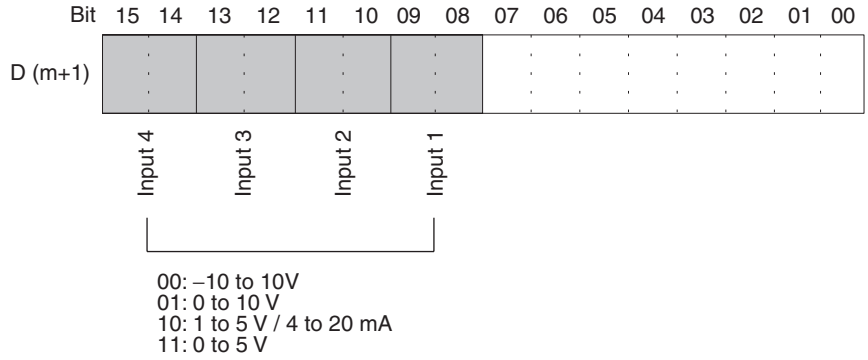

Note
1. For the DM word addresses, m = D20000 + (unit number × 100)
2. The input signal range of “1 to 5 V” or “4 to 20 mA” is switched using the voltage/current switch.

3. After making the DM settings from a Programming Device, it will be necessary to either turn the power to the PLC OFF and ON, or turn ON the Special I/O Unit Restart Bit in order to transfer the contents of the DM settings to the Special I/O Unit.

Voltage/Current Range Setting

When "1 to 5 V, 4 to 20 mA" is selected for the input signal range, either the "1 to 5 V" or "4 to 20 mA" range can then be selected by means of the D (m+35) setting. Adjusting the factory-set voltage and current can improve the accuracy of current output specifications.

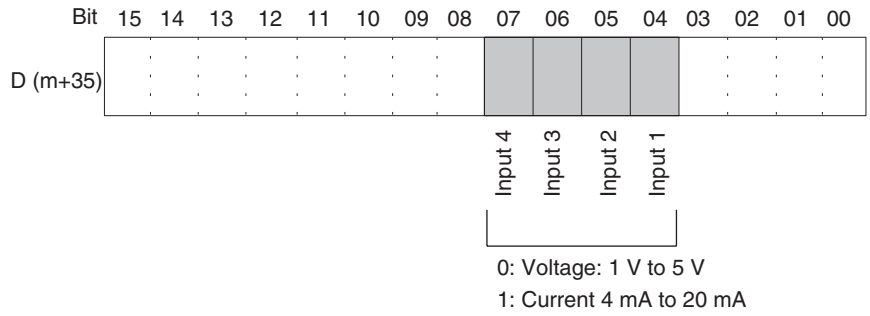

Reading Conversion Values

Analog input conversion values are stored for each input number, in CIO words n+5 to n+8.

Word	Function	Stored value
n+5	Input 1 conversion value	16-bit binary data
n+6	Input 2 conversion value	
n+7	Input 3 conversion value	
n+8	Input 4 conversion value	

Note For the CIO word addresses, n = CIO 2000 + (unit number × 10).

Use MOV(021) or XFER(070) to read conversion values in the user program.

Example 1

In this example, the conversion data from only one input is read. (The unit number is 0.)

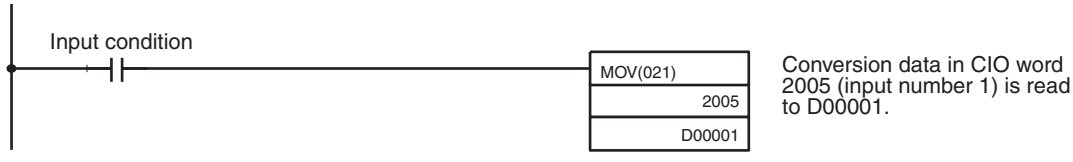

Example 2

In this example, the conversion data from multiple inputs is read. (The unit number is 0.)

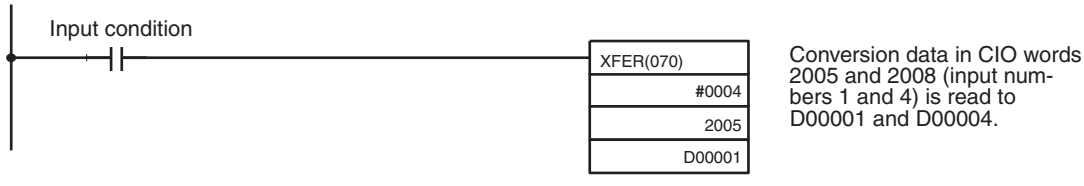

For details regarding conversion value scaling, refer to *Scaling* on page 448.

9-6-2 Conversion Time and Resolution Setting

Bits 08 to 15 in DM word m+18 can be used to set the conversion time and resolution for the CJ1W-MAD42 to increase speed and accuracy.

This setting applies to analog inputs 1 to 4, i.e., there are not individual settings for each input.

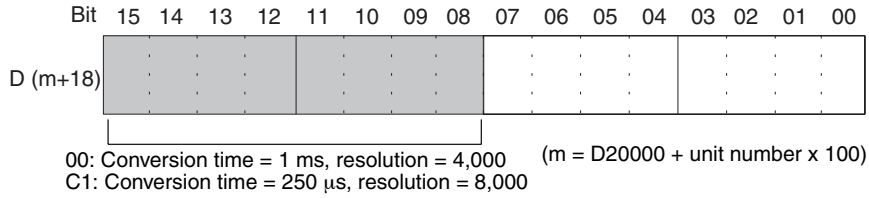

Note After making the DM settings from a Programming Device, it will be necessary to either turn the power to the PLC OFF and ON, or turn ON the Special I/O Unit Restart Bit in order to transfer the contents of the DM settings to the Special I/O Unit.

9-6-3 Mean Value Processing

The Analog I/O Unit can compute the mean value of the conversion values of analog inputs that have been previously sampled. Mean value processing involves an operational mean value in the history buffers, so it has no effect on the data refresh cycle. (The number of history buffers that can be set to use mean value processing is 2, 4, 8, 16, 32, or 64.)

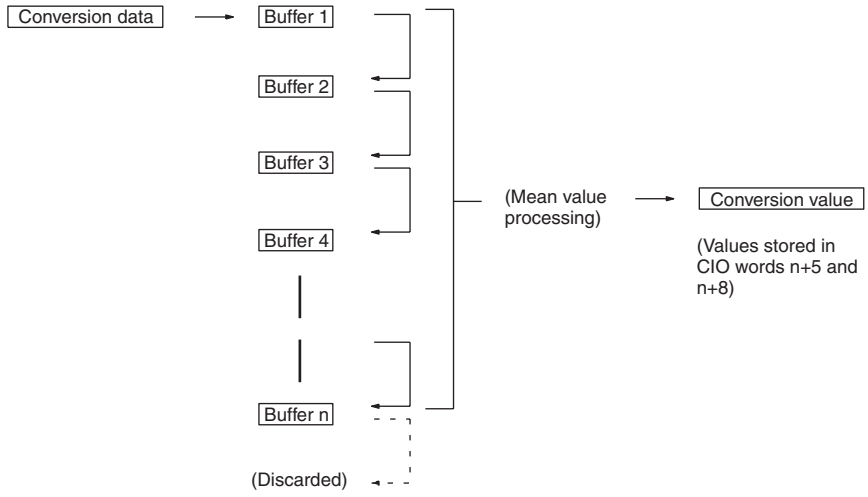

When “n” number of history buffers are being used, the first conversion data will be stored for all “n” number of history buffers immediately after data conversion has begun or after a disconnection is restored.

When mean value processing is used together with the peak value hold function, the mean value will be held.

To specify whether or not mean value processing is to be used, and to specify the number of history buffers for mean data processing, use a Programming

Device to make the settings in D(m+6) to D(m+9) as shown in the following table.

DM word	Function	Set value
D (m+6)	Input 1 mean value processing	0000: Mean value processing with 2 buffers 0001: No mean value processing 0002: Mean value processing with 4 buffers 0003: Mean value processing with 8 buffers 0004: Mean value processing with 16 buffers 0005: Mean value processing with 32 buffers 0006: Mean value processing with 64 buffers
D (m+7)	Input 2 mean value processing	
D (m+8)	Input 3 mean value processing	
D (m+9)	Input 4 mean value processing	

For the DM word addresses, m = D20000 + (unit number × 100)

Note After making the DM settings from a Programming Device, it will be necessary to either turn the power to the PLC OFF and ON, or turn ON the Special I/O Unit Restart Bit to transfer the contents of the DM settings to the Special I/O Unit.

The history buffer moving average is calculated as shown below. (In this example, there are four buffers.)

1,2,3... 1. With the first cycle, Data 1 is stored in all the history buffers.

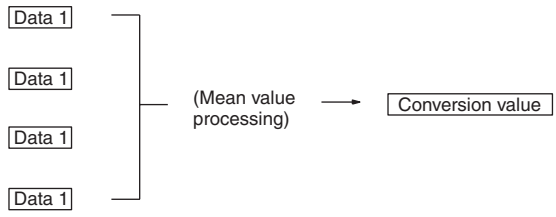

Mean value = (Data 1 + Data 1 + Data 1 + Data 1) ÷ 4

2. With the second cycle, Data 2 is stored in the first history buffer.

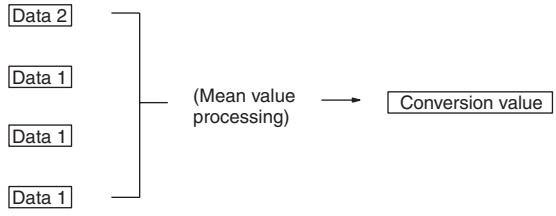

Mean value = (Data 2 + Data 1 + Data 1 + Data 1) ÷ 4

3. With the third cycle, Data 3 is stored in the first history buffer.

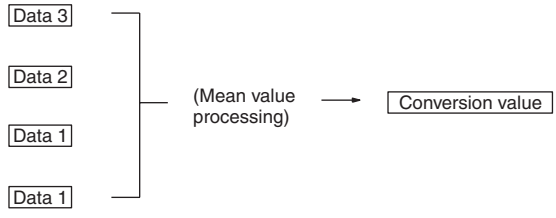

Mean value = (Data 3 + Data 2 + Data 1 + Data 1) ÷ 4

4. With the fourth cycle, the Data 4 is stored in the first history buffer.

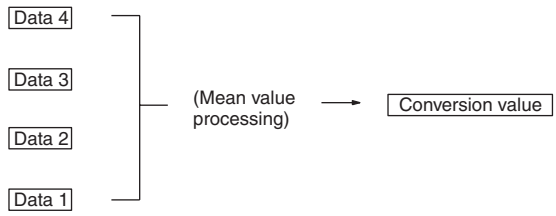

Mean value = (Data 4 + Data 3 + Data 2 + Data 1) ÷ 4

5. With the fifth cycle, Data 5 is stored in the first history buffer.

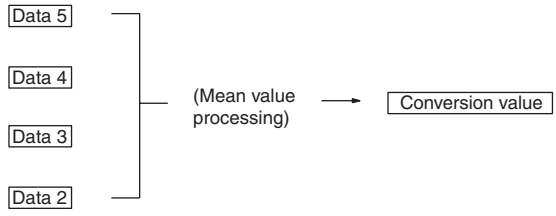

Mean value = (Data 5 + Data 4 + Data 3 + Data 2) ÷ 4

When a disconnection is restored, the mean value processing function begins again from step 1.

Note

1. The default setting for mean value processing in the Analog I/O Unit is mean value processing with 2 buffers.
2. When the mean value processing function is used, the delay in refreshing converted data for input signal changes will be as shown in the following diagram.
3. Specify “no mean value processing” to follow conversion of a rapid change in input signals.

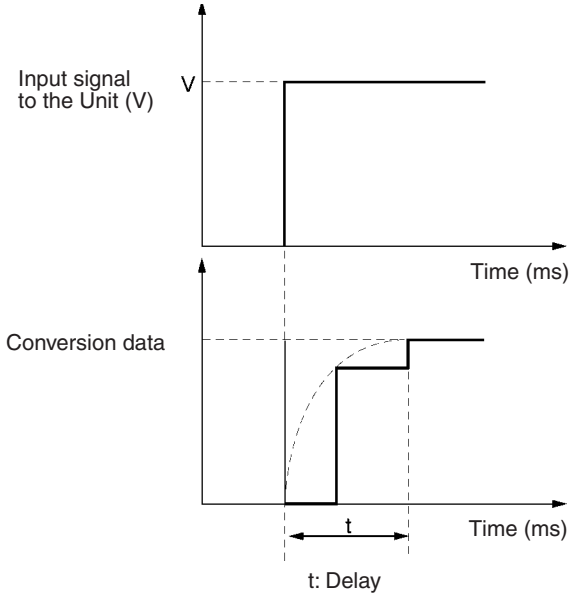

For V = 20 V (–10 to 10 V)

When Resolution is 1 ms/4,000

- For One Word
  t = n + (2 to 3)
- For m Words (1 < m ≤ 4)
  No averaging (n = 1) or two averaging buffers (n = 2)
  t = n × (m + 2)
  For n averaging buffers (4 ≤ n ≤ 64)
  t = (n – 2) × m + 10.5

When Resolution is 500 μs/8,000

- For One Word
  t = [n + (2 to 3)] × 1/4
- For m Words (1 < m ≤ 4)
  No averaging (n = 1) or two averaging buffers (n = 2)
  t = n × (m + 2) × 1/2
  For n averaging buffers (4 ≤ n ≤ 64)
  t = [(n – 2) × m + 10.5] × 1/2

Response Time for a Resolution of 1 ms/4,000

Unit: ms

m	n						
	64	32	16	8	4	2	1
4	258.5	130.5	66.5	34.5	18.5	12	6
3	196.5	100.5	52.5	28.5	16.5	10	5

m	n						
	64	**32**	**16**	**8**	**4**	**2**	**1**
2	134.5	70.5	38.5	22.5	14.5	8	4
1	67	35	19	11	7	5	3

Response Time for a Resolution of 500 μs/8,000

Unit: ms

m	n						
	64	**32**	**16**	**8**	**4**	**2**	**1**
4	129.25	65.25	33.25	17.25	9.25	6	3
3	98.25	50.25	26.25	14.25	8.25	5	2.5
2	67.25	35.25	19.25	11.25	7.25	4	2
1	33.5	17.5	9.5	5.5	3.5	2.5	1.5

The above response times are not affected by the number of analog I/O points that are used.

Symbols

m: Number of input words used in DM Area
n: Average number of buffers set for the input number for which to find the response time

Calculation Example

The following example calculations are for a resolution of 8,000 with an application using inputs 1 and 8, 64 averaging buffers set for input 1, and no averaging set for input 8.

- Response time for input 1: t = {(64 – 2) × 2 + 10.5} × 1/2 = 67.25 (ms)
- Response time for input 1: t = 1 × (2 + 2) × 1/2 = 2 (ms)

9-6-4 Peak Value Hold Function

The peak value hold function holds the maximum digital conversion value for every input (including mean value processing). This function can be used with analog input. The following diagram shows how digital conversion values are affected when the peak value hold function is used.

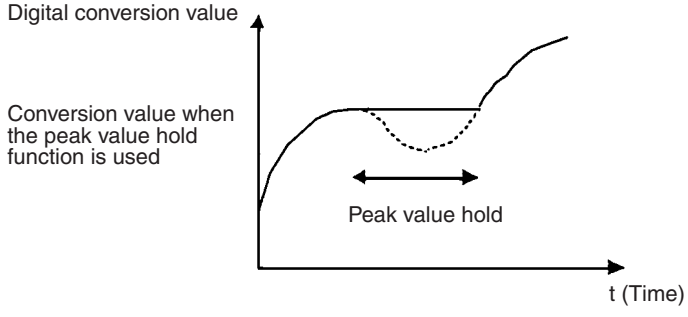

The peak value hold function can be set individually for each input number by turning on the respective bits (04 to 07) in CIO word n.

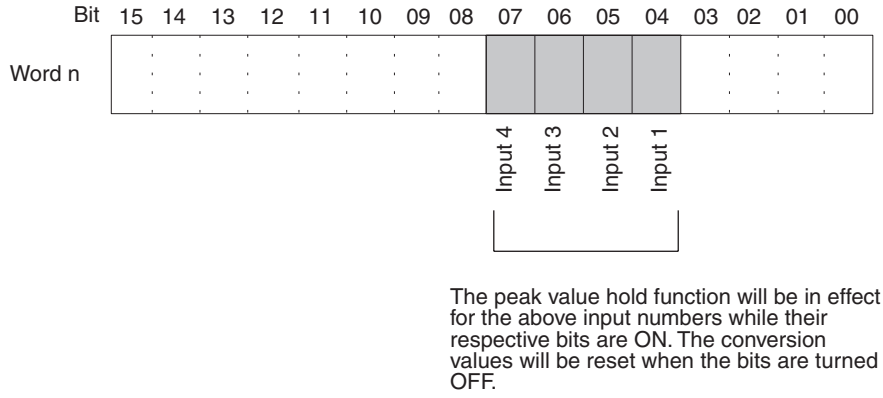

For the CIO word addresses, n = CIO 2000 + (unit number × 10).

In the following example, the peak value hold function is in effect for input number 1, and the unit number is 0.

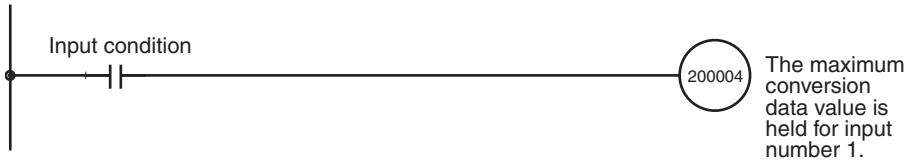

Note When mean value processing is used together with the peak value hold function, the mean value will be held.

As long as the peak value hold function is in effect, the peak value hold will be held even in the event of a disconnection.

When the load to the CPU Unit is disconnected, the Peak Value Hold Bits (bits 04 to 07 of the word n) are cleared and the peak value hold function is disabled.

9-6-5 Input Scaling Function

When upper and lower limits (within a decimal range of −32,000 to 32,000) have been preset in 16-bit binary data (from 8300 to 7D00) in the CPU Unit's DM Area, analog input values can then be automatically converted into a user-specified unit following A/D conversion, with the upper and lower limits taken as full scale based on that resolution value. (See note 1.) This scaling function eliminates the previous need to provide programs for numeric conversion into specified units. It is only enabled, however, for a conversion time of 1 ms and a resolution of 4,000 (and not for a conversion time of 500 μs and a resolution of 8,000).

Note

1. To set the upper or lower limit to a negative number, use two's complement. (Set 8300 to FFF for −32,000 to −1.)
2. Addresses m = D20000 + unit number × 100 are allocated in the DM Area.
3. Besides upper limit > lower limit, it is also possible to set lower limit < upper limit. (Reverse scaling is supported.)
4. Actual A/D conversion is executed at up to −5% to +105% of full scale.
5. When setting upper and lower limits in the DM Area in the specified units, be sure to make the settings in 16-bit binary data (with negative values set

as two's complement). For decimal numbers –32,000 to +32,000, set 16-bit binary data (8300 to 7D00).

6. The scaling function is enabled for only a conversion time of 1 ms and a resolution of 4,000 (and not for a conversion time of 500 μs and a resolution of 8,000).
7. The scaling function cannot be used when the ratio conversion function is used.
8. If the scaling upper limit equals the lower limit, or if the scaling upper limit or lower limit is outside the range of ±32,000, a scaling data setting error is generated and scaling cannot be executed. Operation starts normally when both the upper and lower limits are set to 0000 (the default values).

Setting Upper and Lower Limits for Input Scaling

Set the scaling upper and lower limits for inputs 1 to 4 in words m+27 to m+34 of the DM Area, as shown below.

Note For decimal numbers –32,000 to +32,000, set 16-bit binary data (8300 to 7D00).

DM word	Bits															
	15	14	13	12	11	10	9	8	7	6	5	4	3	2	1	0
D (m+27)	Input 1 scaling lower limit															
D (m+28)	Input 1 scaling upper limit															
D (m+29)	Input 2 scaling lower limit															
D (m+30)	Input 2 scaling upper limit															
D (m+31)	Input 3 scaling lower limit															
D (m+32)	Input 3 scaling upper limit															
D (m+33)	Input 4 scaling lower limit															
D (m+34)	Input 4 scaling upper limit															

Example Setting 1

Set the following conditions in D (m+27) to D (m+34). (The values shown in parentheses are binary data.)

Setting condition	Set value
Input signal range	0 to 10 V
Scaling lower limit	0000 (0000)
Scaling upper limit	10,000 (2710)

When Input Signal Range is 0 V to 10 V

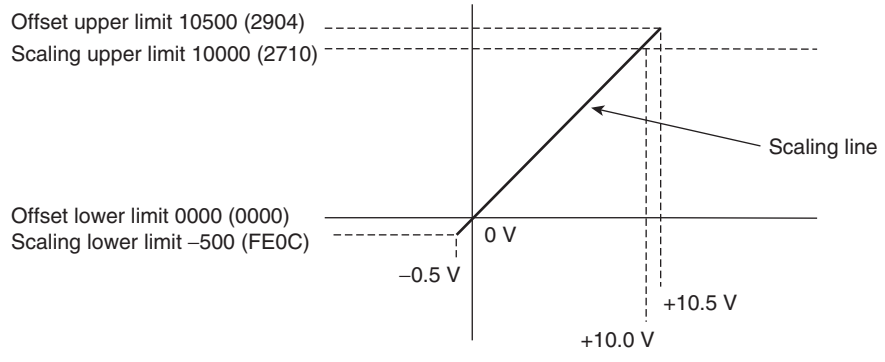

The following table shows the correspondence between input signals and converted scaling values. (The values shown in parentheses are binary data.)

Input signal	Conversion result
0 V	0000 (0000)
10 V	10,000 (2710)

Input signal	Conversion result
–0.5 V	–500 (FE0C)
10.5 V	10,500 (2904)

Example Setting 2 (Reverse Scaling)

Set the following conditions in D (m+27) to D (m+34). (The values shown in parentheses are binary data.)

Setting condition	Set value
Input signal range	0 to 10 V
Scaling lower limit	10000 (2710)
Scaling upper limit	0000 (0000)

When Input Signal Range is 0 V to 10 V (Reverse Scaling)

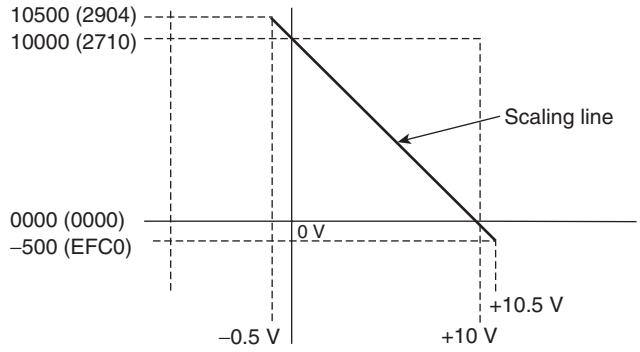

The following table shows the correspondence between input signals and converted scaling values. (The values shown in parentheses are binary data.)

Input signal	Conversion result
0 V	10,000 (2710)
10 V	0000 (0000)
–0.5 V	10,500 (2904)
10.5 V	–500 (FE0C)

9-6-6 Input Disconnection Detection Function

When an input signal range of 1 to 5 V (4 to 20 mA) is used, input circuit disconnections can be detected. The detection conditions for each of the input signal ranges are shown in the following table.

Range	Current/voltage
1 to 5 V	0.3 V max.
4 to 20 mA	1.2 mA max.

The current/voltage level will fluctuate according to the offset/gain adjustment.

The input disconnection detection signals for each input number are stored in bits 04 to 07 of CIO word n+9. Specify these bits as execution conditions to use disconnection detection in the user's program.

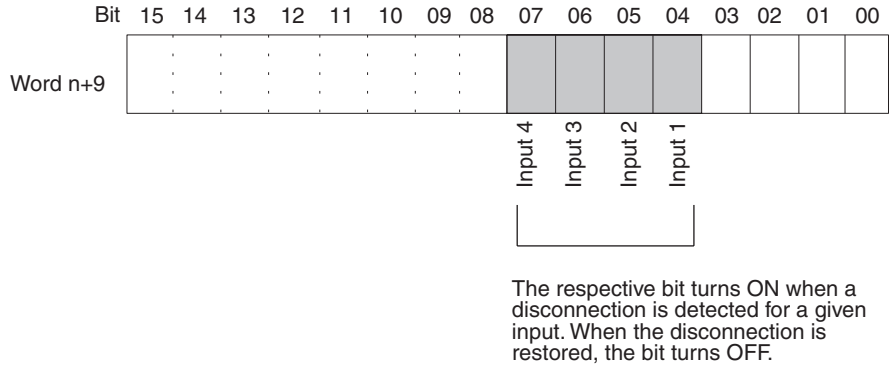

For the CIO word addresses, n = CIO 2000 + (unit number × 10).

The conversion value during a disconnection will be 0000.

In the following example, the conversion value is read only if there is no disconnection at analog input number 1. (The unit number is 0.)

9-7 Analog Output Functions and Operating Procedures

9-7-1 Output Settings and Conversions

Setting Outputs and Signal Ranges

Output Numbers

The Analog I/O Unit converts analog outputs specified by output numbers 1 to 2 only. To specify the analog outputs to be used, turn ON from a Programming Device the D(m) bits in the DM Area shown in the following diagram.

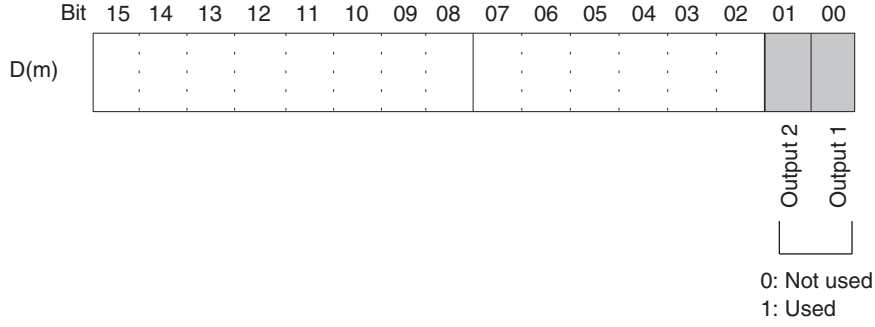

The analog output conversion cycle can be shortened by setting any unused output numbers to 0.

Conversion cycle = (1 ms) (See note 3.) × (Number of outputs used)

Note

1. For the DM word addresses, m = D20000 + (unit number × 100).
2. Output numbers not used (set to 0) will be output at 0 V.

3. This value will be 500 μs when the setting is for 500 μs and a resolution of 8,000.

Output Signal Range

Any of four types of output signal range (–10 to 10 V, 0 to 10 V, 1 to 5 V/4 to 20 mA, and 0 to 5 V) can be selected for each of the outputs (i.e., output numbers 1 to 4). To specify the output signal range for each output, use a Programming Device to set the D (m+1) bits in the DM Area shown in the following diagram.

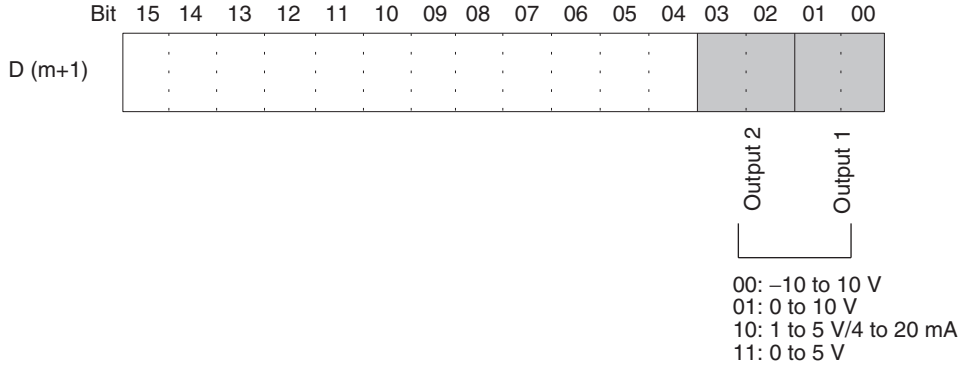

Note

1. For the DM word addresses, m = D20000 + (unit number × 100).
2. After making the DM settings from a Programming Device, it will be necessary to either turn the power to the PLC OFF and ON, or turn ON the Special I/O Unit Restart Bit to transfer the contents of the DM settings to the Special I/O Unit.

Voltage/Current Range Setting

When "1 to 5 V, 4 to 20 mA" is selected for the output signal range, either the "1 to 5 V" or "4 to 20 mA" range can then be selected by means of the D (m+35) setting. Adjusting the factory-set voltage and current can improve the accuracy of current output specifications.

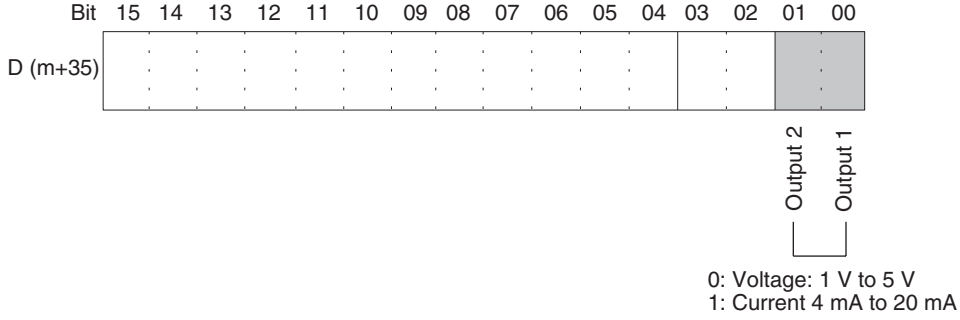

Writing Set Values

Analog output set values are written to CIO words (n+1) and (n+2).

Word	Function	Stored value
n+1	Output 1 set value	16-bit binary data
n+2	Output 2 set value	

For the CIO word addresses, n = CIO 2000 + (unit number × 10).

Use MOV(021) or XFER(070) to write values in the user program.

Example 1

In this example, the set value from only one input is read. (The unit number is 0.)

The set value stored in D 00001 is written to CIO word 2001 (output number 1).

Example 2

In this example, multiple set values are written. (The unit number is #0.)

The set values stored in D 00001 to D 00004 are written to CIO words 2001 to 2004 (outputs 1 to 4).

Note If the set value has been written outside the specified range, an output setting error will occur.

9-7-2 Conversion Time and Resolution Setting

Bits 08 to 15 in DM word m+18 can be used to set the conversion time and resolution for the CJ1W-MAD42 to increase speed and accuracy.

This setting applies to analog inputs 1 to 4, i.e., there are not individual settings for each input.

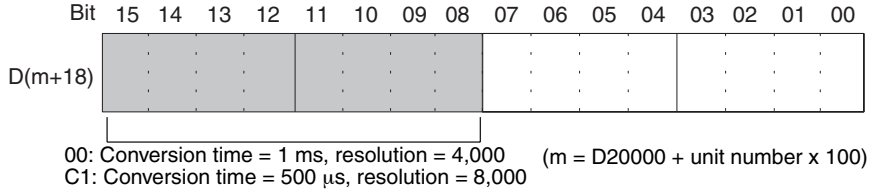

Note After making the DM settings from a Programming Device, it will be necessary to either turn the power to the PLC OFF and ON, or turn ON the Special I/O Unit Restart Bit in order to transfer the contents of the DM settings to the Special I/O Unit.

Starting and Stopping Conversion

To begin analog output conversion, turn ON the corresponding Conversion Enable Bit (word n, bits 00 and 01) from the user's program.

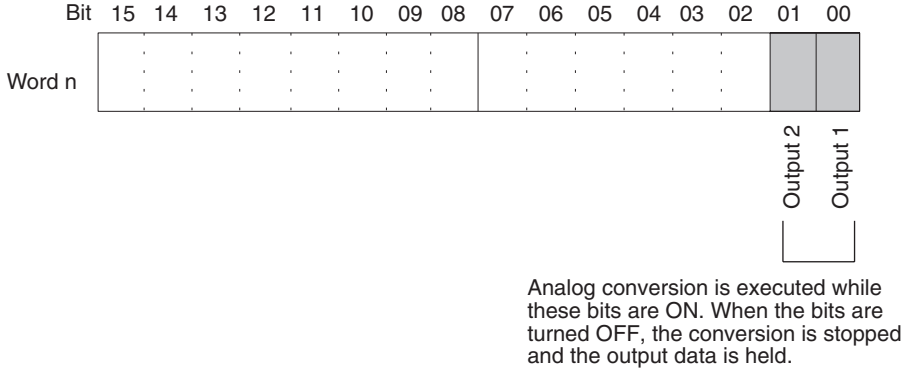

For the CIO word addresses, n = CIO 2000 + (unit number × 10).

The analog output when conversion is stopped will differ depending on the output signal range setting and output hold setting. Refer to *Setting Outputs and Signal Ranges* on page 409 and *9-7-3 Output Hold Function*.

Conversion will not begin under the following conditions even if the Conversion Enable Bit is turned ON. Refer to *9-7-3 Output Hold Function*.

1,2,3...

1. In adjustment mode, when something other than the output number is output during adjustment.
2. When an output setting value occurs.
3. When a fatal error occurs at the PLC.
4. When there is an input disconnection during a ratio conversion.

When the operation mode for the CPU Unit is changed from RUN or MONITOR mode to PROGRAM mode, or when the power is turned ON, the Conversion Enable Bits will all turn OFF. The output status at this time depends on the output hold function.

In this example, conversion is begun for analog output number 1. (The unit number is 0.)

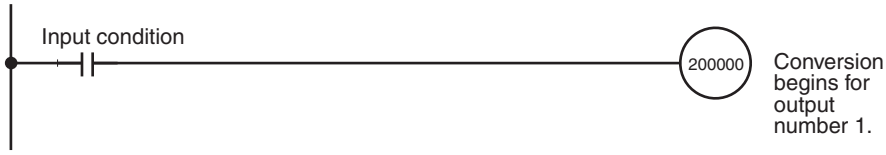

9-7-3 Output Hold Function

The Analog I/O Unit stops conversion under the following circumstances and outputs the value set by the output hold function.

1,2,3...

1. When the Conversion Enable Bit is OFF. Refer to *Conversion Time and Resolution Setting* on page 411.
2. In adjustment mode, when something other than the output number is output during adjustment. Refer to *9-9-2 Input Offset and Gain Adjustment Procedures*.
3. When an output setting value occurs.
4. When a fatal error occurs at the PLC.
5. When there is an input disconnection during ratio conversion.
6. When there is an I/O bus error.
7. When the CPU Unit is in LOAD OFF status.
8. When there is a WDT (watchdog timer) error in the CPU Unit.

CLR, HOLD, or MAX can be selected for the output status when conversion is stopped.

Output signal range	CLR	HOLD	MAX
0 to 10 V	–0.5 V (Min. –5% of full scale)	Voltage that was output just prior to stop.	10.5 V (Max. +5% of full scale)
–10 to 10 V	0.0 V	Voltage that was output just prior to stop.	11.0 V (Max. +5% of full scale)
1 to 5 V	0.8 V (Min. –5% of full scale)	Voltage that was output just prior to stop.	5.2 V (Max. +5% of full scale)
0 to 5 V	–0.25 V (Min. –5% of full scale)	Voltage that was output just prior to stop.	5.25 V (Max. +5% of full scale)

Output signal range	CLR	HOLD	MAX
4 to 20 mA	3.2 mA (Min. –0.5% of full scale)	Voltage that was output just prior to stop.	20.8 mA (Max. +5% of full scale)

The above values may fluctuate if offset/gain adjustment has been applied.

To specify the output hold function, use a Programming Device to set the DM Area words D (m+2) to D (m+5) as shown in the following table.

DM word	Function	Set value
D (m+2)	Output 1: Output status when stopped	xx00: CLR Output 0 or minimum value of range (–5%). xx01: HOLD Hold output value prior to stop. xx02: MAX Output maximum value of range (105%). Set any value in the leftmost bytes (xx).
D (m+3)	Output 2: Output status when stopped	

For the DM word addresses, m = D20000 + (unit number × 100).

Note After specifying the DM settings from a Programming Device, it will be necessary to either turn the power to the PLC OFF and ON, or turn ON the Special I/O Unit Restart Bit to transfer the contents of the DM settings to the Special I/O Unit.

9-7-4 Output Scaling Function

When upper and lower limits (within a decimal range of –32,000 to 32,000) have been preset in 16-bit binary data (from 8300 to 7D00) in the CPU Unit's DM Area, within a range of –32,000 to 32,000 decimal, analog output set values are automatically converted to the resolution value with the upper and lower limits taken as full scale, and are then converted from digital to analog. (See note 1.) This scaling function eliminates the previous necessity of providing programs for numeric conversion from specified units. It is only enabled, however, for a conversion time of 1 ms and a resolution of 4,000 (and not for a conversion time of 500 μs and a resolution of 8,000).

Note

1. To set the upper or lower limit to a negative number, use two's complement. (Set 8300 to FFF for –32,000 to –1.)
2. Addresses m = D20000 + unit number x 100 are allocated in the DM Area.
3. Besides upper limit > lower limit, it is also possible to set lower limit < upper limit. (Reverse scaling is supported.)
4. Actual D/A conversion is executed at up to –5% to +105% of full scale.
5. When setting upper and lower limits in the DM Area in the specified units, be sure to make the settings in 16-bit binary data (with negative values set as two's complement).
6. The scaling function is enabled for only a conversion time of 1 ms and a resolution of 4,000 (and not for a conversion time of 500 μs and a resolution of 8,000).
7. The scaling function cannot be used when the ratio conversion function is used.

8. If the scaling upper limit equals the lower limit, or if the scaling upper limit or lower limit is outside the range of ±32,000, a scaling data setting error is generated and scaling cannot be executed. Operation starts normally when both the upper and lower limits are set to 0000 (the default values).

Setting Upper and Lower Limits for Output Scaling

Set the scaling upper and lower limits for outputs 1 and 2 in words D (m+19) to D (m+22) of the DM Area, as shown below.

Note For decimal numbers –32,000 to +32,000, set 16-bit binary data (8300 to 7D00).

DM word	Bits															
	15	14	13	12	11	10	9	8	7	6	5	4	3	2	1	0
D (m+19)	Output 1 scaling lower limit															
D (m+20)	Output 1 scaling upper limit															
D (m+21)	Output 2 scaling lower limit															
D (m+22)	Output 2 scaling upper limit															

Example Setting 1

Set the following conditions in D (m+19) to D (m+22). (The values shown in parentheses are binary data.)

Setting condition	Set value
Output signal range	0 to 10 V
Scaling lower limit	0000 (0000)
Scaling upper limit	10,000 (2710)

When Output Signal Range is 0 V to 10 V

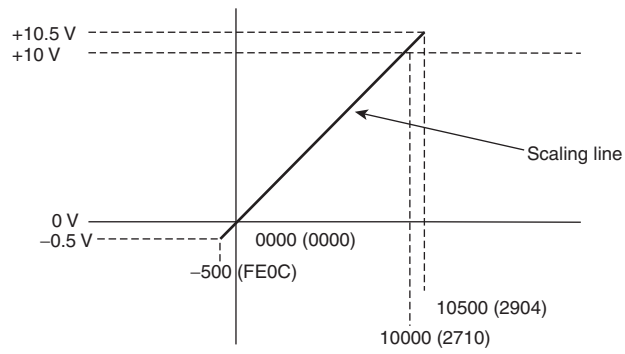

The following table shows the correspondence between output signals and converted scaling values. (The values shown in parentheses are 16-bit binary data.)

Output set value	Output signal
0000 (0000)	0 V
10,000 (2710)	10 V
–500 (FE0C)	–0.5 V
10,500 (2904)	10.5 V

Example Setting 2 (Reverse Scaling)

Set the following conditions in D (m+27) to D (m+34). (The values shown in parentheses are binary data.)

Setting condition	Set value
Output signal range	0 to 10 V
Scaling lower limit	10000 (2710)
Scaling upper limit	0000 (0000)

When Output Signal Range is 0 V to 10 V

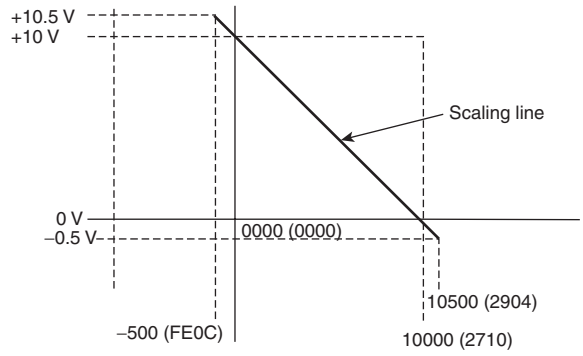

The following table shows the correspondence between output signals and converted scaling values. (The values shown in parentheses are 16-bit binary data.)

Conversion result	Output signal
10,000 (2710)	0 V
0000 (0000)	10 V
10,500 (2904)	–0.5 V
–500 (FE0C)	10.5 V

9-7-5 Output Setting Errors

If the analog output set value is greater than the specified range, a setting error signal will be stored in CIO word n+9 (bits 00 and 01).

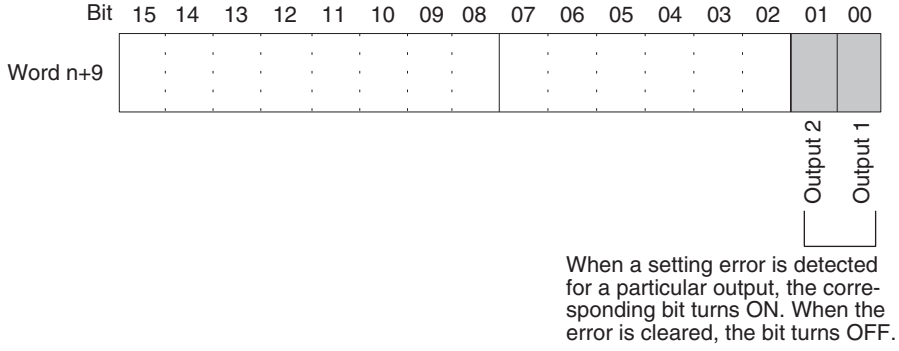

Note
1. For the CIO word addresses, n = CIO 2000 + (unit number × 10).
2. The voltage for an output number at which a setting error has occurred will be output according to the output hold function.

9-8 Ratio Conversion Function

The Analog I/O Unit has a ratio conversion function that enables it to perform analog-to-analog conversions by itself, without utilizing the PLC. It can use either Loop 1 (input number 1 → output number 1), Loop 2 (input number 2 → output number 2).

Input 1 → Ratio bias calculation → Output 1

Input 2 → Ratio bias calculation → Output 2

The relationship between the analog input and the analog output is expressed by the following conversion equations.

Positive Gradient Conversion

(Analog output) = A × (Analog input) + B

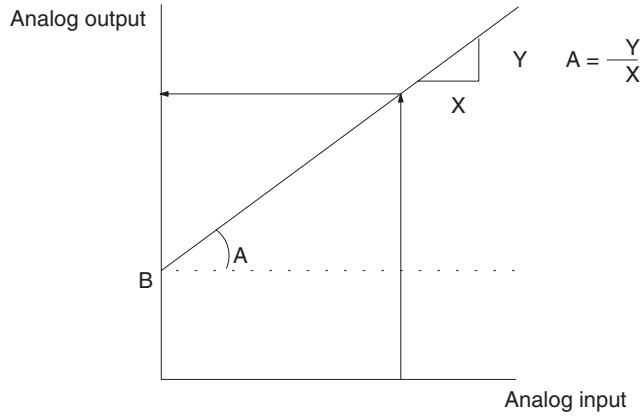

A: Ratio set value 0 to 99.99 (BCD)
B: Bias 8000 to 7FFF (16-bit binary data)

The following example is for an I/O range of –10 to 10 V.

Constant A: 0050 (0.5)
Constant B: 0190 (2.0 V)

Analog input: –10 to 10 V
Analog output = 0.5 × (–10 to 10 V) + 2.0 V
= –3.0 to 7.0 V

Note The scaling function cannot be used simultaneously with the ration conversion function.

Negative Gradient Conversion

(Analog output) = F – A x (Analog input) + B

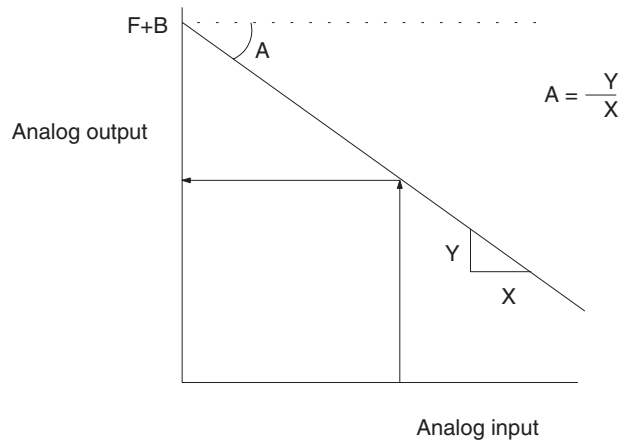

F: Output range maximum value
A: Ratio set value 0 to 99.99 (BCD)
B: Bias 8000 to 7FFF (16-bit binary data)

The following example is for an I/O range of 0 to 10 V.

Constant A: 1000 (10.0)
Constant B: 0068 (0.5 V)
F: 10 V (output range maximum value)
Analog input: 0 to 1 V
Analog output = 10 V – 10 × (0 to 1 V) + 0.5 V
= 10.5 to 0.5 V

Specifying Ratio Conversion Function

To specify the use of Loop 1 and Loop 2 and their I/O relationships, set bits 08 to 11 of DM Area word D (m) as shown in the following diagram.

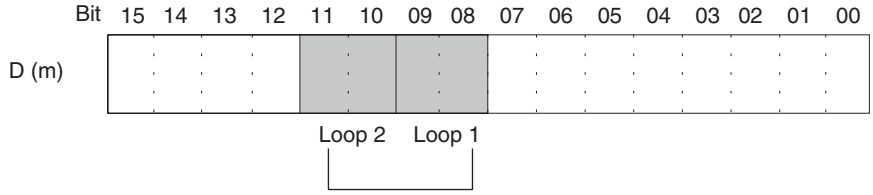

00: Not used.
01: Uses positive gradient conversion.
10: Uses negative gradient conversion.
11: Same as 10 above.

The response time of ratio conversion (input-to-output conversion) is 850 μs for a resolution of 4,000 and 420 μs for a resolution of 8,000.

For the DM word addresses, m = D20000 + (unit number × 100).

Specifying Ratio Set Value and Bias

The ratio set value (A) and the bias (B) are set in the DM words from D(m+10) to D (m+13).

DM word	Function	Set value
D (m+10)	Loop 1 (input 1 → output 1), A constant	BCD 0 to 9999 (0.00 to 99.99; unit: 0.01)
D (m+11)	Loop 1 (input 1 → output 1), B constant	16-bit binary data
D (m+12)	Loop 2 (input 2 → output 2), A constant	BCD 0 to 9999 (0.00 to 99.99; unit: 0.01)
D (m+13)	Loop 2 (input 2 → output 2), B constant	16-bit binary data

For the DM word addresses, m = D20000 + (unit number × 100).

Note

1. After making the DM settings from a Programming Device, it will be necessary to either turn the power to the PLC OFF and ON, or turn ON the Special I/O Unit Restart Bit to transfer the contents of the DM settings to the Special I/O Unit. For details regarding the Special I/O Unit Restart Bit, refer to *9-10-4 Restarting Special I/O Units*.
2. The calculation results will be output in digital values to word n+5 (Loop 1) and word n+6 (Loop 2).
3. If an input cable is disconnected, the calculation value will become 0000, and the analog output value will be output according to the output hold function.
4. If the output value exceeds the specified signal range due to the ratio conversion of the digital input value, the calculation result and analog output will be given as the lower or upper-limit value.

9-9 Adjusting Offset and Gain

These functions can be used to calibrate inputs or outputs according to the devices that are connected.

Input Calibration Function

When the resolution is set to 4,000, this function takes an output device's offset voltage (or current) and gain voltage (or current) as the analog input conversion data 0000 and 0FA0 (or 07D0 when the range is ±10 V). For example, when used in a range of 1 to 5 V, a range of 0.8 to 4.8 V may be output even if the external device specifications are for 1 to 5 V. In such cases, when the external device outputs an offset voltage of 0.8 V, the converted data at the Analog Input Unit will be FF38, at a resolution of 4,000. When a gain voltage of 4.8 V is output, the converted data will be 0EDA. With the offset and gain adjustment functions, when 0.8 V and 4.8 V are input, then the values are converted to 0000 and 0FA0 respectively (instead of FF38 and 0EDA).

Output device offset and gain voltage	Converted data before adjustment	Converted data after adjustment
0.8 V	FF38 (FE70)	0000 (0000)
4.8 V	0EDA (0DB4)	0FA0 (1F40)

(Resolution: 8,000)

Input Calibration Function

This function adjusts output voltages according to input device offset values and gain values, and takes the presently set values of the Unit to be 0000 and 00FA0 (or 07D0 when the range is ±10 V) respectively. For example, assume that the specifications for an external input device (such as a display device) are 100.0 to 500.0. If voltage is output by the Analog Output Unit at a set value of 0000, and the actual display at the external input device shows not 100.0 but 100.5, the output voltage can be adjusted (lowered in this case) so that the display will show 100.0, and the set value (FFFB in this case) when the display shows exactly 100.0 can be set as 0000.

Similarly, for the gain value, if the Analog Output Unit outputs voltage at a set value of 0FA0, and the actual display at the external input device shows not 500.0 but 500.5, the output voltage can be adjusted (lowered in this case) so that the display will show 500.0, and the set value (0F9B in this case) when the display shows exactly 500.0 can be set as 0FA0.

Display at external input device	Set value before adjustment (word n+8)	Set value after adjustment
100.0	FFFB (FFFD)	0000 (0000)
500.0	0F9B (1F36)	0FA0 (1F40)

(Resolution: 8,000)

9-9-1 Adjustment Mode Operational Flow

The adjustment mode enables the input or output of the connected devices to be calibrated. Refer to *2-7 Adjusting Offset and Gain* and *5-7 Adjusting Offset and Gain* for details of input and output functions. The following diagram shows the flow of operations when using the adjustment mode for adjusting offset and gain.

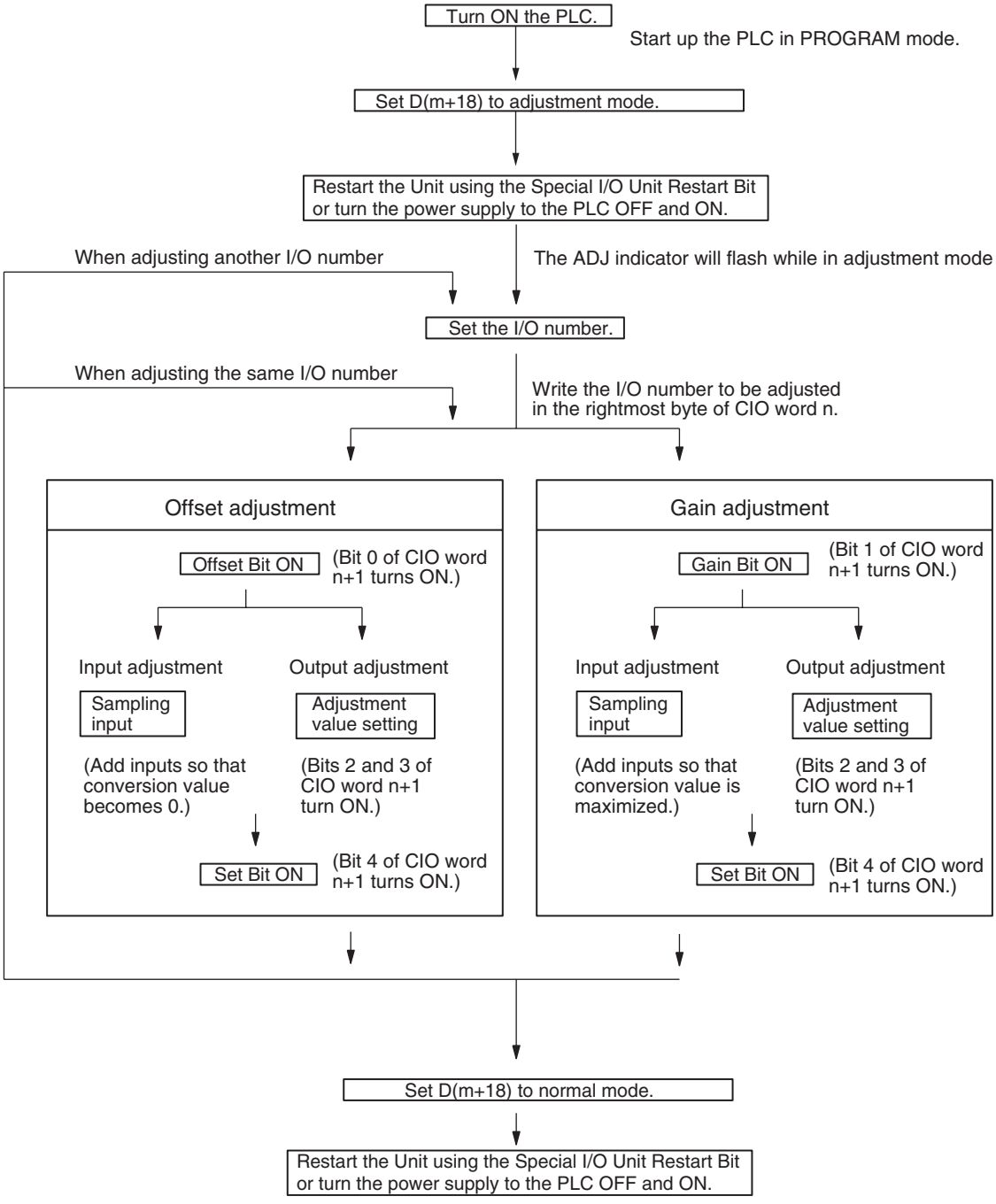

⚠ **Caution** Set the PLC to PROGRAM mode when using the Analog I/O Unit in adjustment mode. If the PLC is in MONITOR mode or RUN mode, the Analog I/O Unit will stop operating, and the input and output values that existed immediately before this stoppage will be retained.

⚠ **Caution** Always perform adjustments in conjunction with offset and gain adjustments.

Note Input adjustments can be performed more accurately in conjunction with mean value processing.

9-9-2 Input Offset and Gain Adjustment Procedures

Specifying Input Number to be Adjusted

To specify the input number to be adjusted, write the value to the rightmost byte of CIO word n as shown in the following diagram.

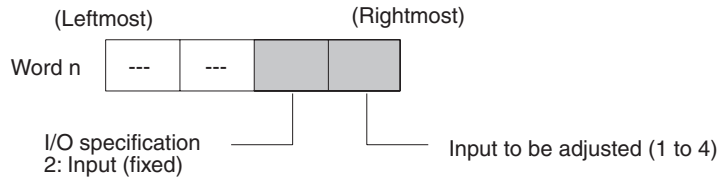

For the CIO word addresses, n = CIO 2000 + (unit number x 10).

The following example uses input number 1 adjustment for illustration. (The unit number is 0.)

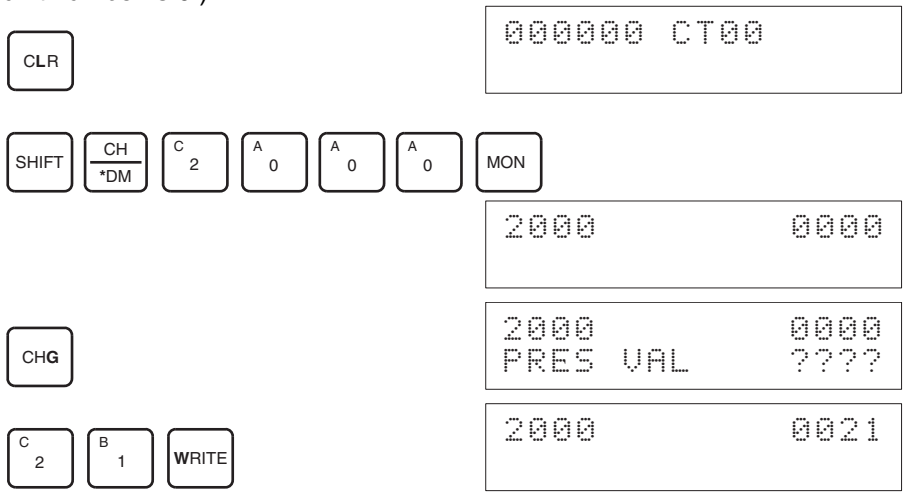

Bits Used for Adjusting Offset and Gain

The CIO word (n+1) bits shown in the following diagram are used for adjusting offset and gain.

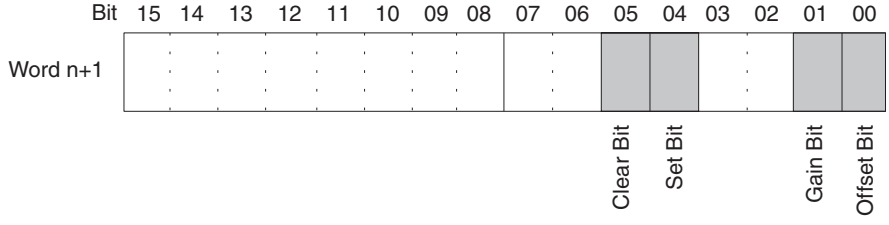

Offset Adjustment

The procedure for adjusting the analog input offset is explained below. As shown in the following diagram, the offset is adjusted by sampling inputs so that the conversion value becomes 0000.

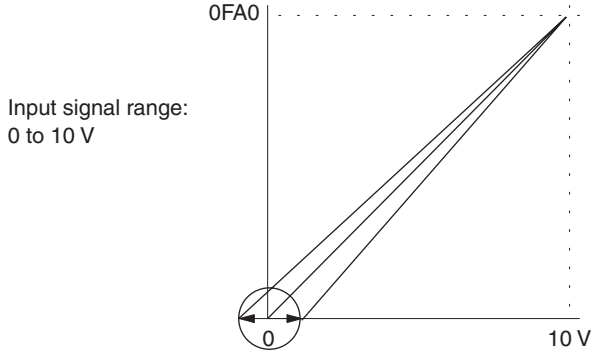

Offset adjustment input range

The following example uses input number 1 adjustment for illustration. (The unit number is 0.)

1,2,3...

1. Turn ON bit 00 (the Offset Bit) of CIO word n+1. (Hold the ON status.)

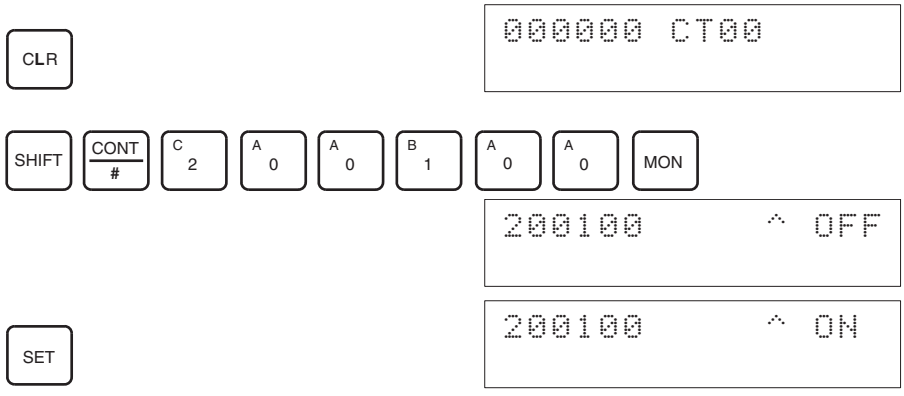

The analog input's digital conversion values while the Offset Bit is ON will be monitored in CIO word n+8.

2. Check whether the input devices are connected.

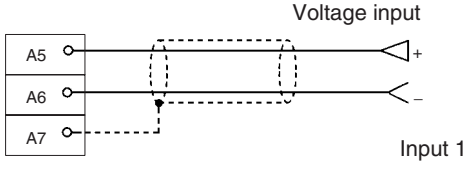

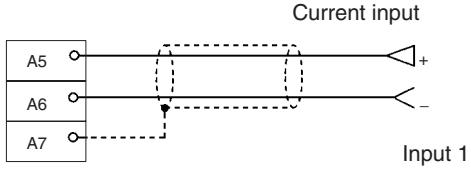

For current input, check that the voltage/ current switch is ON.

3. Input the voltage or current so that the conversion value becomes 0000. The following table shows the offset adjustment voltages and currents to be input according to the input signal range.

Input signal range	Input range	Word (n+8) monitoring value
0 to 10 V	–0.5 to 0.5 V	FF38 to 00C8 (FE70 to 0190)
–10 to 10 V	–1.0 to 1.0 V	
1 to 5 V	0.8 to 1.2 V	
0 to 5 V	–0.25 to 0.25 V	
4 to 20 mA	3.2 to 4.8 mA	

(Values in parentheses are for a resolution of 8,000.)

4. After inputting the voltage or current so that the conversion value for the analog input terminal is 0000, turn ON bit 04 (the Set Bit) of CIO word n+1, and then turn it OFF again.

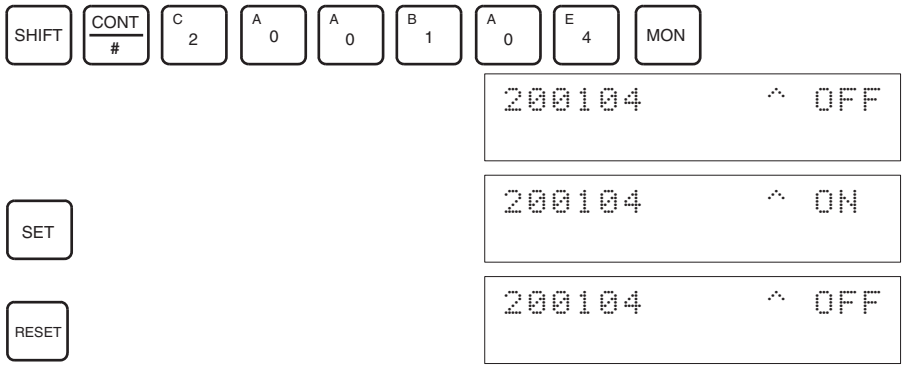

While the Offset Bit is ON, the offset value will be saved to the Unit's EEPROM when the Set Bit turns ON.

5. To finish the offset adjustment, turn OFF bit 00 (the Offset Bit) of CIO word n+1.

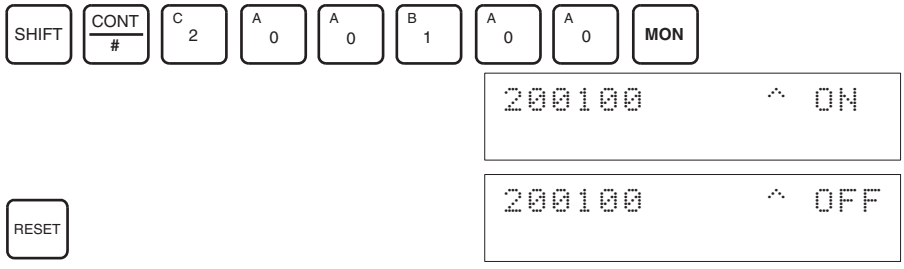

⚠ **Caution** Do not turn OFF the power supply or restart the Unit while the Set Bit is ON (data is being written to the EEPROM). Otherwise, illegal data may be written in the Unit's EEPROM and "EEPROM Errors" may occur when the power supply is turned ON or when the Unit is restarted, causing a malfunction.

⚠ **Caution** When making adjustments, be sure to perform both the offset adjustment and gain adjustment at the same time.

Note

1. The EEPROM can be overwritten 50,000 times.
2. While the Offset Bit or the Gain Bit is ON, the present conversion data will be displayed in word n+8.
   If the Offset Bit or the Gain Bit is OFF, the value immediately prior to turning the bit OFF will be held.

Gain Adjustment

The procedure for adjusting the analog input gain is explained below. As shown in the following diagram, the gain is adjusted by sampling inputs so that the conversion value is maximized.

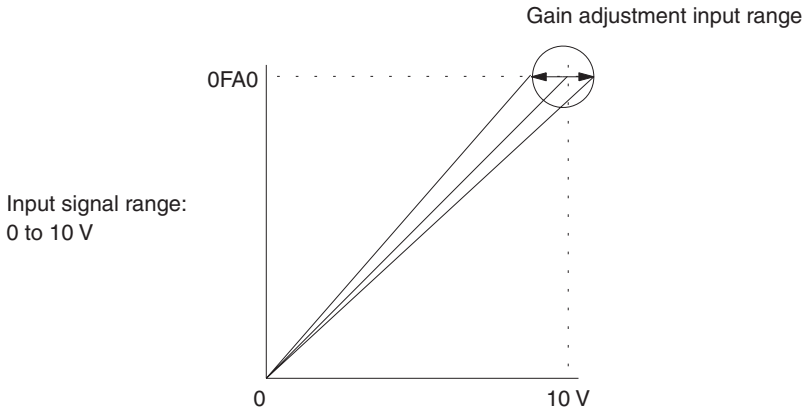

The following example uses input number 1 adjustment for illustration. (The unit number is 0.)

1,2,3... 1. Turn ON bit 01 (the Gain Bit) of CIO word n+1. (Hold the ON status.)

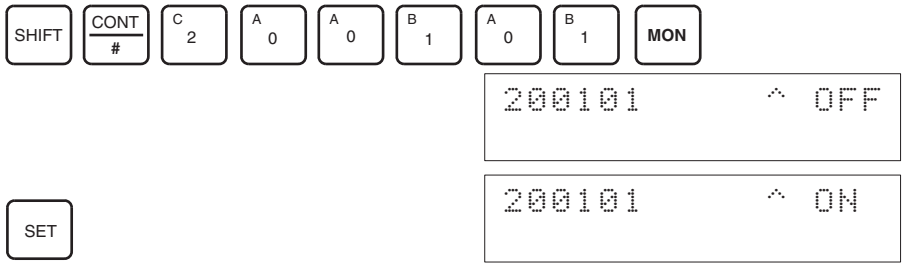

The analog input's digital conversion values while the Gain Bit is ON will be monitored in CIO word n+8.

2. Check whether the input devices are connected.

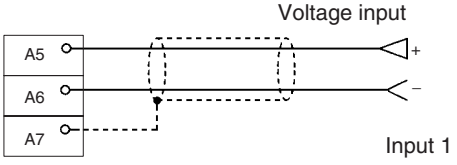

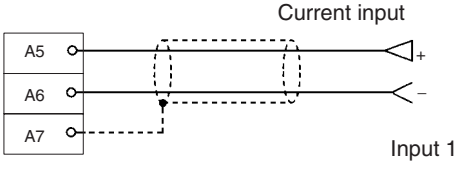

For current input, check that the voltage/ current switch is ON.

3. Input the voltage or current so that the conversion value is maximized (0FA0 or 07D0 for a resolution of 4,000). The following table shows the gain adjustment voltages and currents to be input according to the input signal range.

Input signal range	Input range	Word (n+8) monitoring value
0 to 10 V	9.5 to 10.5 V	0ED8 to 1068 (1DB0 to 20D0)
–10 to 10 V	9.0 to 11.0 V	0708 to 0898 (0E10 to 1130)
1 to 5 V	4.8 to 5.2 V	0ED8 to 1068 (1DB0 to 20D0)
0 to 5 V	4.75 to 5.25 V	0ED8 to 1068 (1DB0 to 20D0)
4 to 20 mA	19.2 to 20.8 mA	0ED8 to 1068 (1DB0 to 20D0)

(Values in parentheses are for a resolution of 8,000.)

4. With the voltage or current having been input so that the conversion value for the Analog I/O Unit is maximized (0FA0 or 07D0, when the resolution is 4,000), turn bit 04 (the Set Bit) of CIO word n+1 ON and then OFF again.

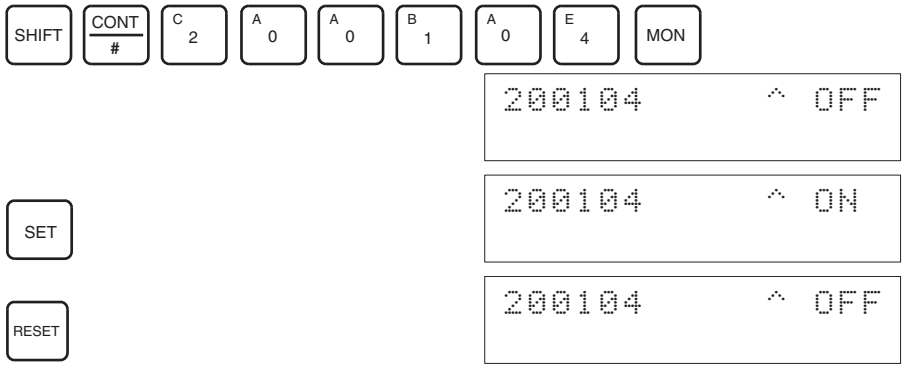

While the Gain Bit is ON, the gain value will be saved to the Unit's EEPROM when the Set Bit turns ON.

5. To finish the gain adjustment, turn OFF bit 01 (the Gain Bit) of CIO word n+1.

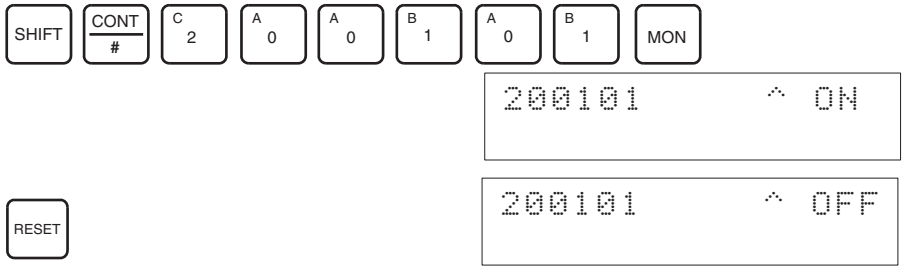

⚠ **Caution** Do not turn OFF the power supply or restart the Unit while the Set Bit is ON (data is being written to the EEPROM). Otherwise, illegal data may be written in the Unit's EEPROM and "EEPROM Errors" may occur when the power supply is turned ON or when the Unit is restarted, causing a malfunction.

⚠ **Caution** When making adjustments, be sure to perform both the offset adjustment and gain adjustment at the same time.

Note
1. The EEPROM can be overwritten 50,000 times.
2. While the Offset Bit or the Gain Bit is ON, the present conversion data will be displayed in word n+8.
   If the Offset Bit or the Gain Bit is OFF, the value immediately prior to turning the bit OFF will be held.

Clearing Offset and Gain Adjusted Values

Follow the procedure outlined below to return the offset and gain adjusted values to their default settings.

The following example uses input number 1 adjustment for illustration. (The unit number is 0.)

1,2,3...

1. Turn ON bit 05 (the Clear Bit) of CIO word n+1. (Hold the ON status.) Regardless of the input value, 0000 will be monitored in CIO word n+8.

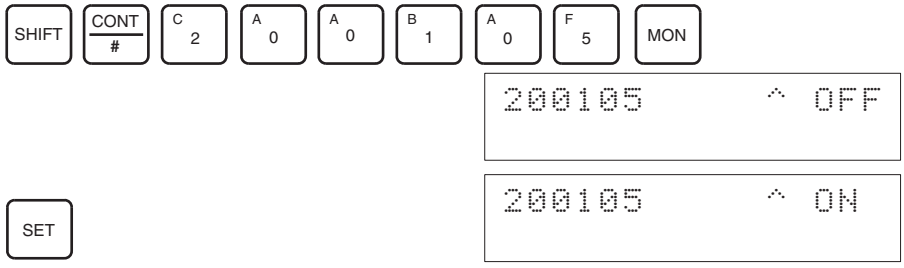

2. Turn bit 04 of CIO word n+1 ON and then OFF again.

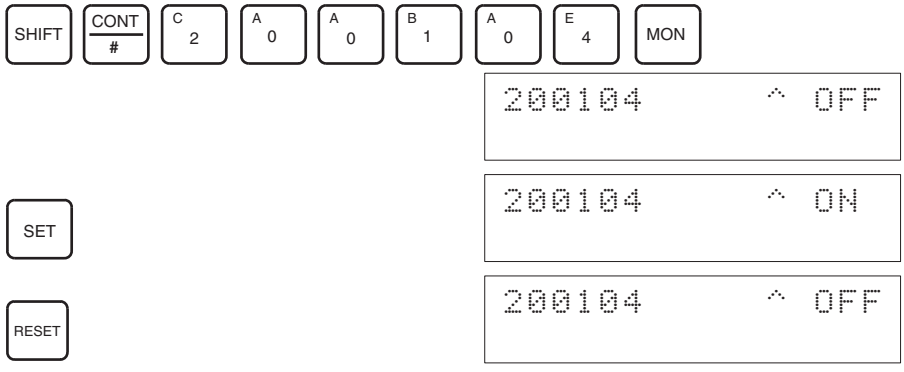

While the Clear Bit is ON, the adjusted value will be cleared and reset to the default offset and gain values when the Set Bit turns ON.

3. To finish the clearing of adjusted values, turn OFF bit 05 (the Clear Bit) of CIO word n+1.

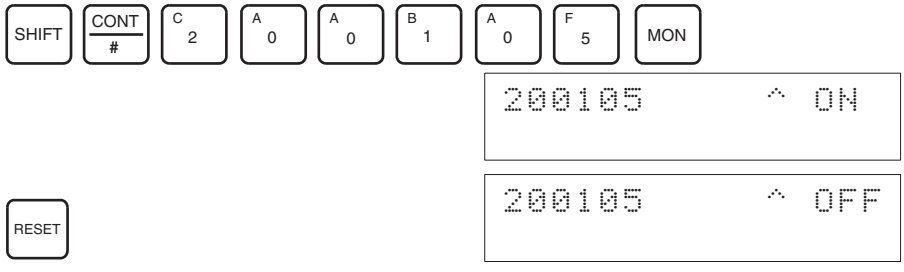

⚠ **Caution** Do not turn OFF the power supply or restart the Unit while the Set Bit is ON (data is being written to the EEPROM). Otherwise, illegal data may be written in the Unit's EEPROM and "EEPROM Errors" may occur when the power supply is turned ON or when the Unit is restarted, causing a malfunction.

⚠ **Caution** When making adjustments, be sure to perform both the offset adjustment and gain adjustment at the same time.

Note The EEPROM can be overwritten 50,000 times.

9-9-3 Output Offset and Gain Adjustment Procedures

Specifying Output Number to be Adjusted

To specify the output number to be adjusted, write the value to the rightmost byte of CIO word n as shown in the following diagram.

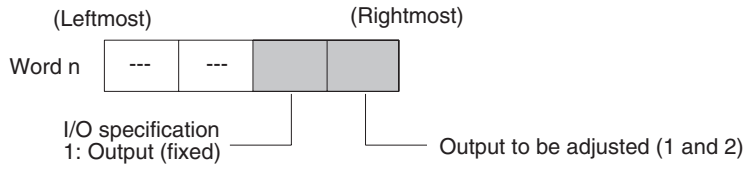

For the CIO word addresses, n = CIO 2000 + unit number × 10.

The following example uses output number 1 adjustment for illustration. (The unit number is 0.)

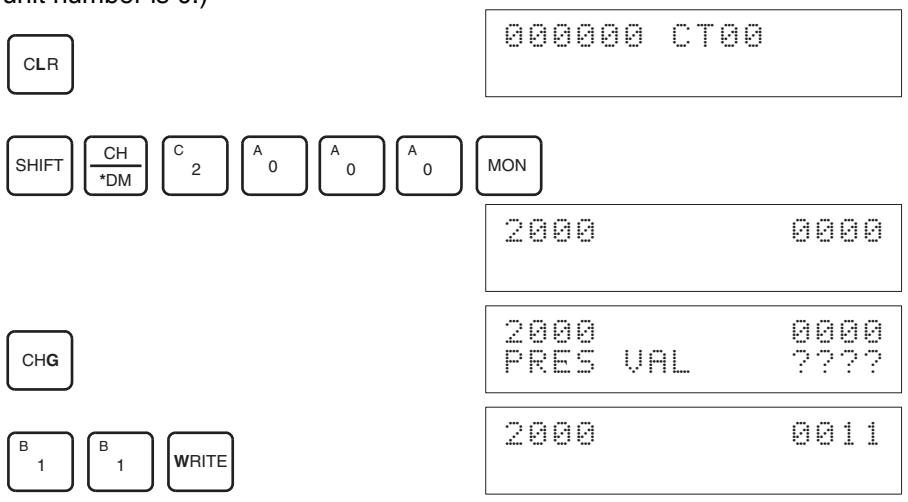

Bits Used for Adjusting Offset and Gain

The CIO word n+1 bits shown in the following diagram are used for adjusting offset and gain.

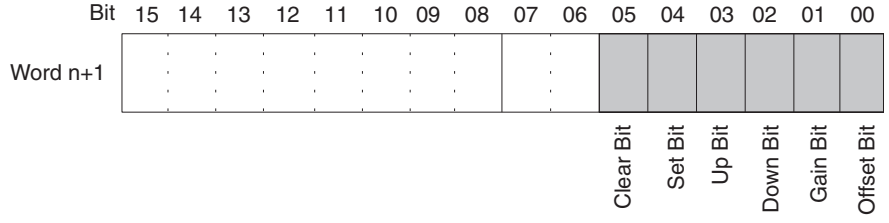

Offset Adjustment

The procedure for adjusting the analog output offset is explained below. As shown in the following diagram, the set value is adjusted so that the analog output reaches the standard value (0 V/1 V/4 mA).

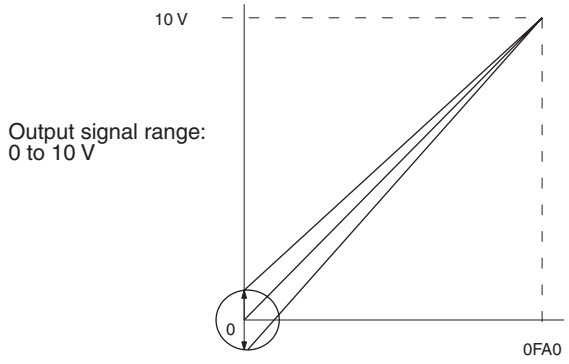

Offset adjustment output range

The following example uses output number 1 adjustment for illustration. (The unit number is 0.)

1,2,3... 1. Turn ON bit 00 (the Offset Bit) of CIO word n+1. (Hold the ON status.)

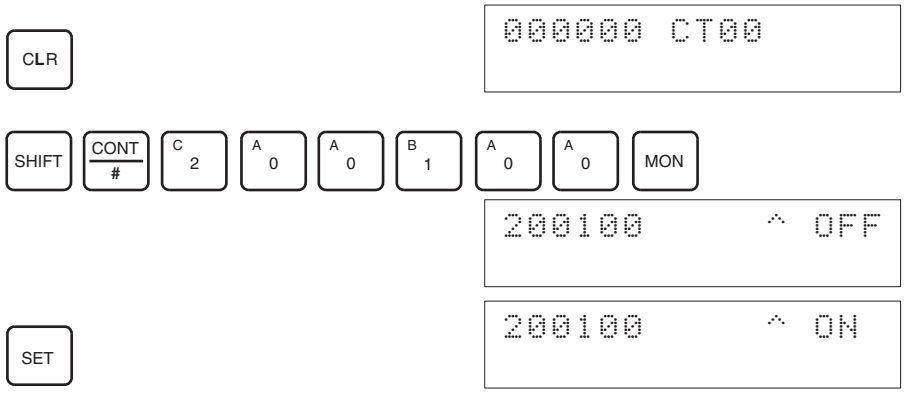

2. Check whether the output devices are connected.

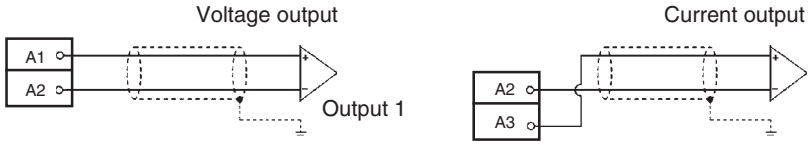

3. Monitor CIO word n+8 and check the set value while the Offset Bit is ON.

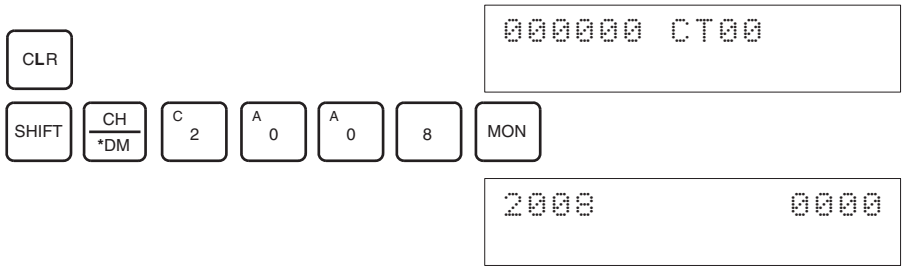

4. Change the set value so that the output voltage are as shown in the following table. The data can be set within the indicated ranges.

Output signal range	Possible output voltage/current adjustment	Output range
0 to 10 V	–0.5 to 0.5 V	FF38 to 00C8 (FE70 to 0190)
–10 to 10 V	–1.0 to 1.0 V	
1 to 5 V	0.8 to 1.2 V	
0 to 5 V	–0.25 to 0.25 V	
4 to 20 mA	3.2 to 4.8 mA	

(Values in parentheses are for a resolution of 8,000.)

Change the set value, using the Up Bit (bit 03 of word n+1) and the Down Bit (bit 02 of word n+1).

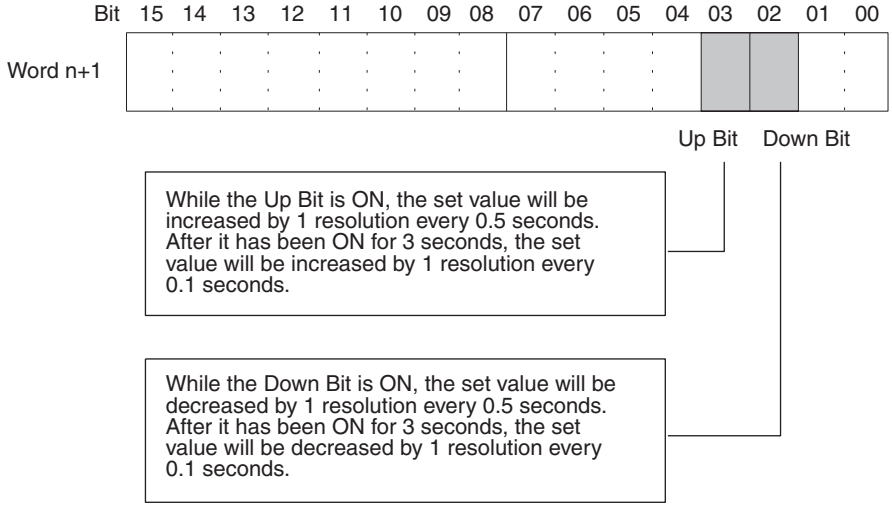

- The following example increases the output voltage.

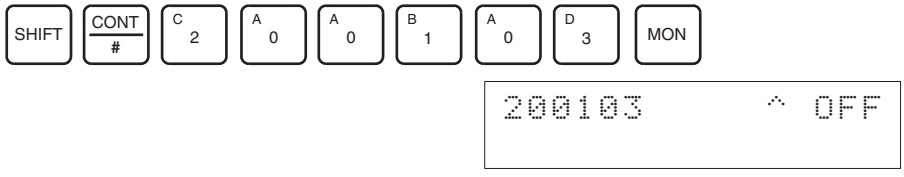

The bit will remain ON until the output becomes an appropriate value, at which time, it will turn OFF.

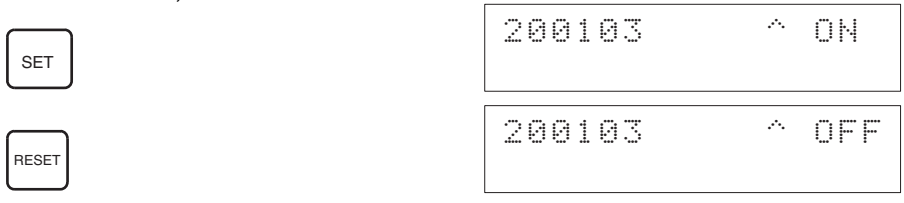

- The following example decreases the output voltage.

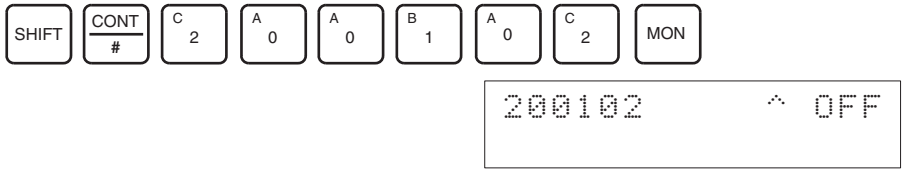

The bit will remain ON until the output becomes an appropriate value, at which time, it will turn OFF.

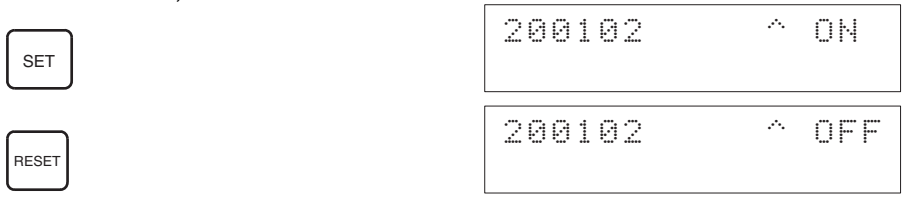

5. Check the 0-V/1-V/4 mA output, and then turn bit 04 (the Set Bit) of CIO word n+1 ON and then OFF again.

SHIFT CONT/# C 2 A 0 A 0 B 1 A 0 E 4 MON

```
200104      ^ OFF
```

SET

```
200104      ^ ON
```

RESET

```
200104      ^ OFF
```

While the Offset Bit is ON, the offset value will be saved to the Unit's EEPROM when the Set Bit turns ON.

6. To finish the offset adjustment, turn OFF bit 00 (the Offset Bit) of CIO word n+1.

SHIFT CONT/# C 2 A 0 A 0 B 1 A 0 A 0 MON

```
200100      ^ ON
```

SET

```
200100      ^ OFF
```

⚠ **Caution** Do not turn OFF the power supply or restart the Unit while the Set Bit is ON (data is being written to the EEPROM). Otherwise, illegal data may be written in the Unit's EEPROM and "EEPROM Errors" may occur when the power supply is turned ON or when the Unit is restarted, causing a malfunction.

⚠ **Caution** When making adjustments, be sure to perform both the offset adjustment and gain adjustment at the same time.

Note The EEPROM can be overwritten 50,000 times.

Gain Adjustment

The procedure for adjusting the analog output gain is explained below. As shown in the following diagram, the set value is adjusted so that the analog output is maximized (to 10 V/5 V/20 mA).

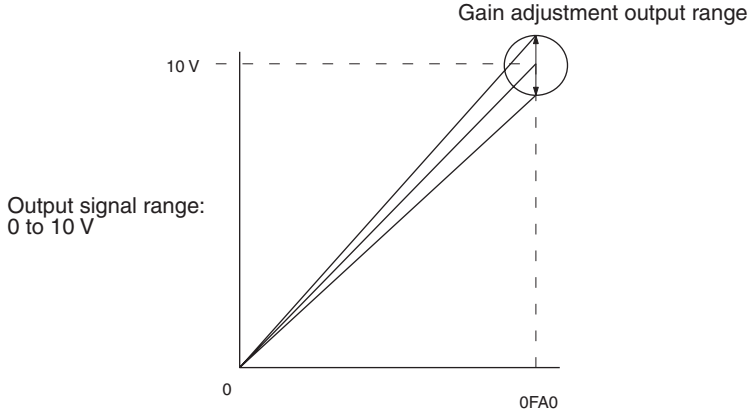

The following example uses output number 1 adjustment for illustration. (The unit number is 0.)

1,2,3... 1. Turn ON bit 01 (the Gain Bit) of CIO word n+1. (Hold the ON status.)

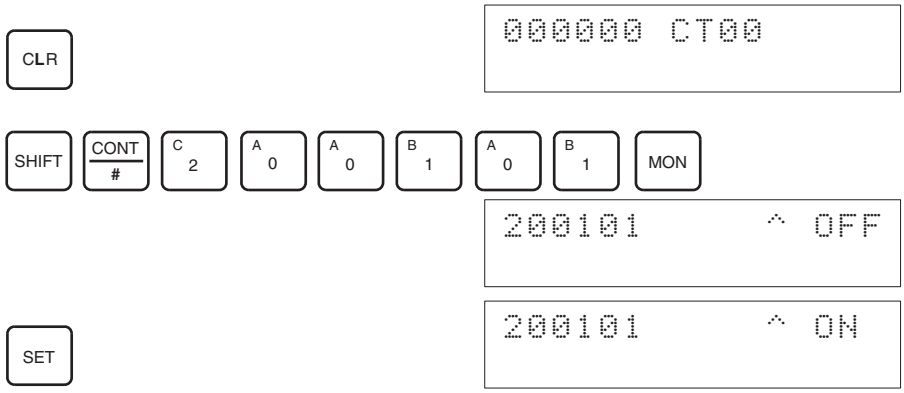

2. Check whether the output devices are connected.

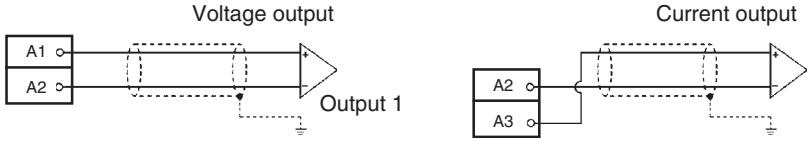

3. Monitor CIO word n+8 and check the set value while the Gain Bit is ON.

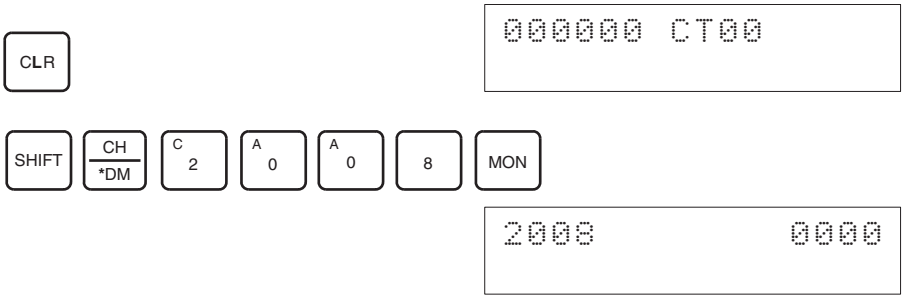

4. Change the set value so that the output voltage is as shown in the following table. The data can be set within the indicated ranges.

Output signal range	Possible output voltage/current adjustment	Output range
0 to 10 V	9.5 to 10.5 V	0ED8 to 1068 (1DB0 to 20D0)
–10 to 10 V	9.0 to 11.0 V	0708 to 0898 (0E10 to 1130)
1 to 5 V	4.8 to 5.2 V	0ED8 to 1068 (1DB0 to 20D0)
0 to 5 V	4.75 to 5.25 V	0ED8 to 1068 (1DB0 to 20D0)
4 to 20 mA	19.2 to 20.8 mA	0ED8 to 1068 (1DB0 to 20D0)

(Values in parentheses are for a resolution of 8,000.)

Change the set value, using the Up Bit (bit 03 of word n+1) and the Down Bit (bit 02 of word n+1).

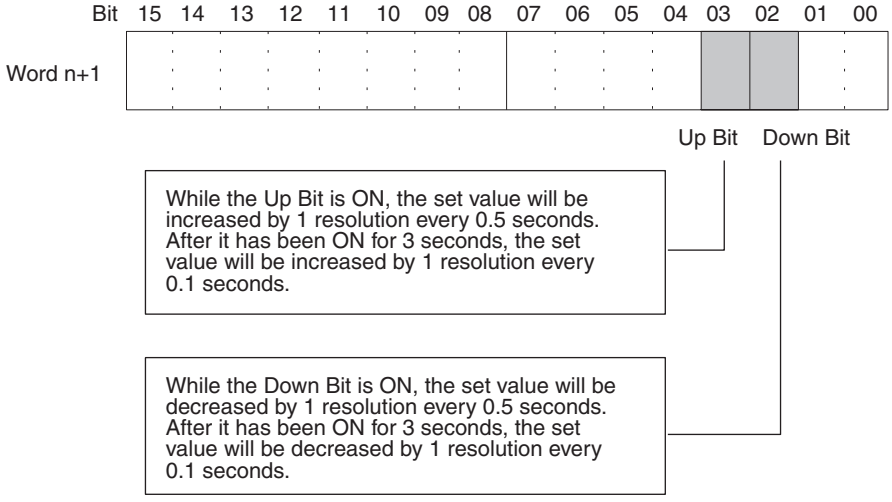

- The following example increases the output voltage.

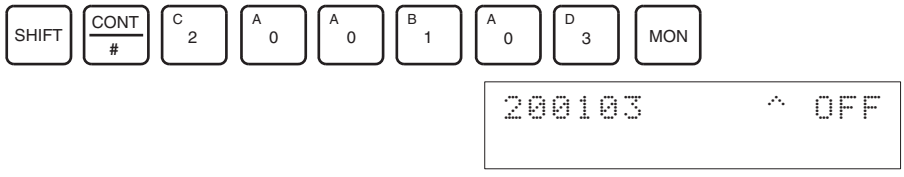

The bit will remain ON until the output voltage becomes an appropriate value, at which time, the output will turn OFF.

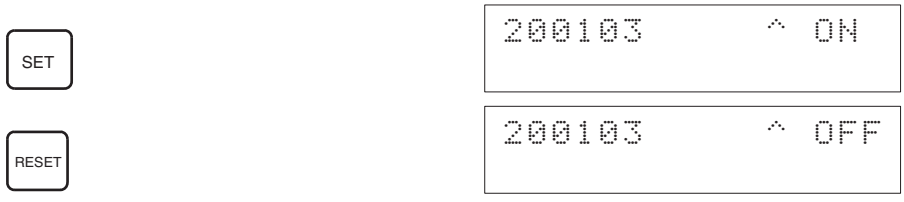

- The following example decreases the output voltage.

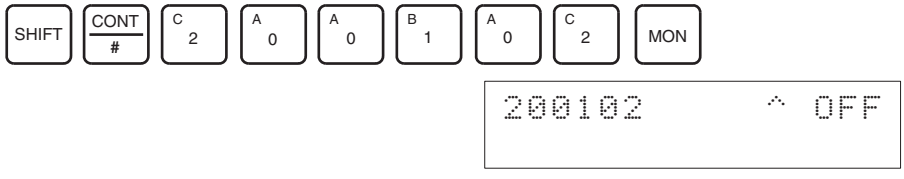

The bit will remain ON until the output voltage becomes an appropriate value, at which time, the output will turn OFF.

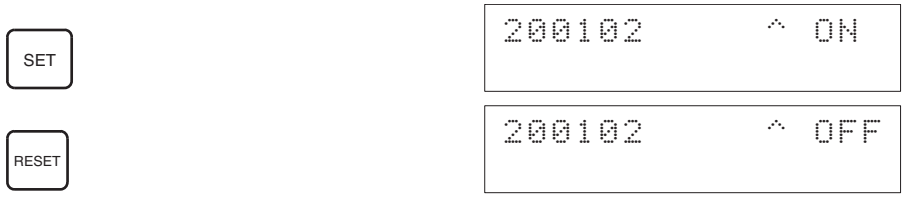

5. Check the 10 V/5 V/20 mA output, and then turn bit 04 (the Set Bit) of CIO word n+1 ON and then OFF again.

SHIFT CONT/# C 2 A 0 A 0 B 1 A 0 E 4 MON

```
200104        ^ OFF
```

SET

```
200104        ^ ON
```

RESET

```
200104        ^ OFF
```

While the Gain Bit is ON, the gain value will be saved to the Unit's EEPROM when the Set Bit turns ON.

6. To finish the gain adjustment, turn OFF bit 01 (the Gain Bit) of CIO word n+1.

SHIFT CONT/# C 2 A 0 A 0 B 1 A 0 B 1 MON

```
200101        ^ ON
```

RESET

```
200101        ^ OFF
```

⚠ **Caution** Do not turn OFF the power supply or restart the Unit while the Set Bit is ON (data is being written to the EEPROM). Otherwise, illegal data may be written in the Unit's EEPROM and "EEPROM Errors" may occur when the power supply is turned ON or when the Unit is restarted, causing a malfunction.

⚠ **Caution** When making adjustments, be sure to perform both the offset adjustment and gain adjustment at the same time.

Note The EEPROM can be overwritten 50,000 times.

Clearing Offset and Gain Adjusted Values

Follow the procedure outlined below to return the offset and gain adjusted values to their default settings.

The following example uses output number 1 adjustment for illustration. (The unit number is 0.)

1,2,3...

1. Turn ON bit 05 (the Clear Bit) of CIO word n+1. (Hold the ON status.) Regardless of the set value, 0000 will be monitored in CIO word n+8.

SHIFT CONT/# C 2 A 0 A 0 B 1 A 0 F 5 MON

```
200105        ^ OFF
```

SET

```
200105        ^ ON
```

2. Turn bit 04 of CIO word n+1 ON and then OFF again.

SHIFT CONT/# C 2 A 0 A 0 B 1 A 0 E 4 MON

```
200104      ^ OFF
```

SET

```
200104      ^ ON
```

RESET

```
200104      ^ OFF
```

While the Clear Bit is ON, the adjusted value will be cleared and reset to the default offset and gain values when the Set Bit turns ON.

3. To finish the clearing of adjusted values, turn OFF bit 05 (the Clear Bit) of CIO word n+1.

SHIFT CONT/# C 2 A 0 A 0 B 1 A 0 F 5 MON

```
200105      ^ ON
```

RESET

```
200105      ^ OFF
```

⚠ **Caution** Do not turn OFF the power supply or restart the Unit while the Set Bit is ON (data is being written to the EEPROM). Otherwise, illegal data may be written in the Unit's EEPROM and "EEPROM Errors" may occur when the power supply is turned ON or when the Unit is restarted, causing a malfunction.

Note The EEPROM can be overwritten 50,000 times.

9-10 Handling Errors and Alarms

9-10-1 Indicators and Error Flowchart

Indicators

If an alarm or error occurs in the Analog I/O Unit, the ERC or ERH indicators on the front panel of the Unit will light.

Front panel of Unit

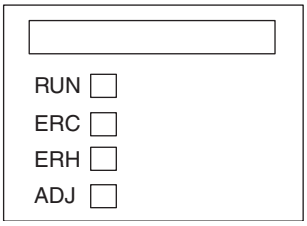

LED	Meaning	Indicator	Operating status
RUN (green)	Operating	Lit	Operating in normal mode.
		Not lit	Unit has stopped exchanging data with the CPU Unit.
ERC (red)	Unit has detected an error	Lit	Alarm has occurred (such as disconnection detection) or initial settings are incorrect.
		Not lit	Operating normally.
ERH (red)	Error in the CPU Unit	Lit	Error has occurred during data exchange with the CPU Unit.
		Not lit	Operating normally.
ADJ (yellow)	Adjusting	Flashing	Operating in offset/gain adjustment mode.
		Not lit	Other than the above.

Troubleshooting Procedure

Use the following procedure for troubleshooting Analog I/O Unit errors.

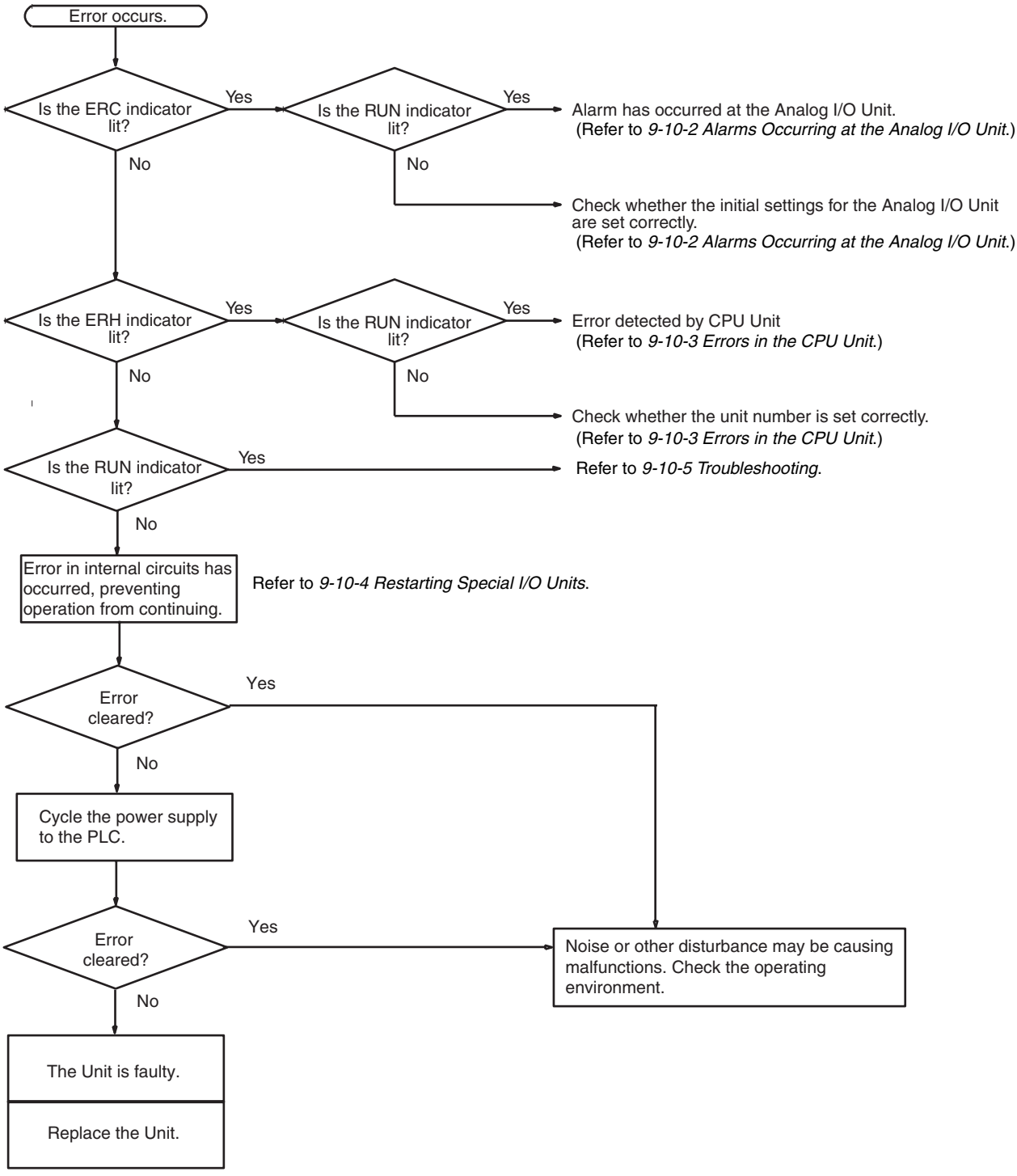

9-10-2 Alarms Occurring at the Analog I/O Unit

When an alarm occurs at the Analog I/O Unit, the ERC indicator lights and the Alarm Flags are stored in bits 08 to 15 of CIO word n+9.

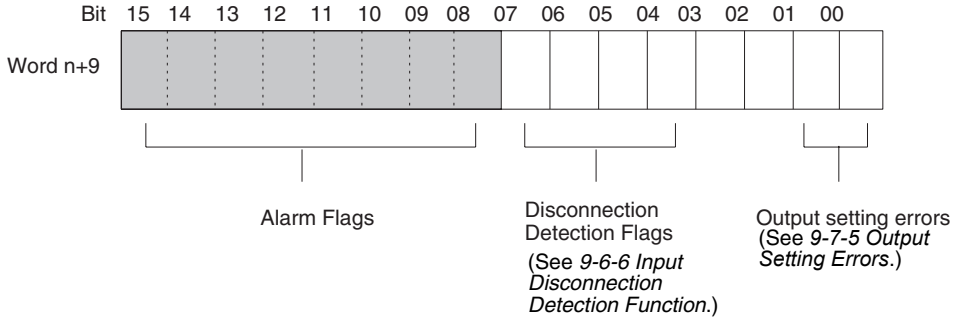

ERC and RUN Indicators: Lit

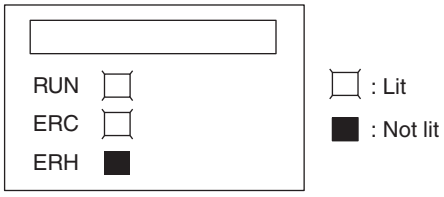

The ERC and RUN indicators will be lit when an error occurs while the Unit is operating normally. The following alarm flags will turn ON in CIO word n+9. These alarm flags will turn OFF automatically when the error is cleared.

Word n + 9	Alarm flag	Error contents	I/O status	Countermeasure
Bits 00 and 01	Output Set Value Error	The output setting range has been exceeded.	Output value set by output hold function.	Correct the set value.
Bits 04 to 07	Disconnection Detection	A disconnection was detected. (See note.)	Conversion data becomes 0000.	Check the rightmost byte of CIO word n+9. The inputs for bits that are ON may be disconnected. Restore any disconnected inputs.
Bit 14	(Adjustment mode) EEPROM Writing Error	An EEPROM writing error has occurred while in adjustment mode.	Holds the output status immediately prior to the error.	Turn the Set Bit OFF, ON, and OFF again. If the error persists even after the reset, replace the Analog I/O Unit.

Note Disconnection detection operates for input numbers used with a range of 1 to 5 V (4 to 20 mA).

For the CIO word addresses, n = CIO 2000 + (unit number x 10).

ERC Indicator and RUN Indicator: Lit, ADJ Indicator: Flashing

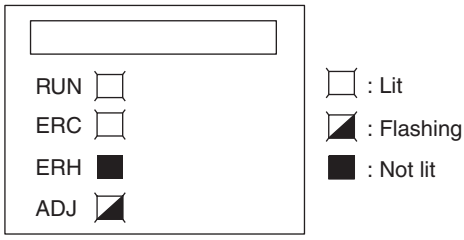

This alarm will occur in the case of incorrect operation while in the adjustment mode. In adjustment mode, the Adjustment Mode ON Flag will turn ON in bit 15 of CIO word n+9.

Word n + 9	Alarm flag	Error contents	I/O status	Countermeasure
Bit 12	(Adjustment mode) Input Value Adjustment Range Exceeded	In adjustment mode, offset or gain cannot be adjusted because input value is out of the permissible range for adjustment.	Conversion data corresponding to the input signal is monitored in word n+8.	If making the adjustment by means of a connected input device, first adjust the input device before adjusting the Analog I/O Unit.
Bit 13	(Adjustment mode) I/O Number Setting Error	In adjustment mode, adjustment cannot be performed because the specified input or output number is not set for use or because the wrong input or output number is specified.	Holds the values immediately prior to the error. No data is changed.	Check whether the word n input or output number to be adjusted is set from 11 to 14, or 21 to 24. Check whether the input or output number to be adjusted is set for use by means of the DM setting.
Bit 15 only ON	(Adjustment Mode) PLC Error	The PLC is in either MONITOR or RUN mode while the Analog I/O Unit is operating in adjustment mode.	Holds the values immediately prior to the error. No data is changed.	Change the setting in bits 00 to 07 of D(m+18) and then either turn the power supply to the PLC OFF and ON or turn ON the Special I/O Unit Restart Bit.

Note When a PLC error occurs in the adjustment mode, Unit operations will stop operating. (The input and output values immediately prior to the error will be held.)

ERC Indicator: Lit, RUN Indicator: Not Lit

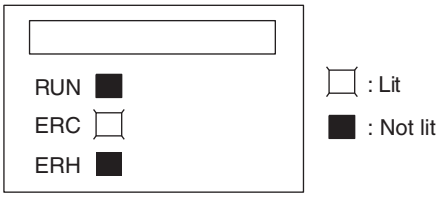

The ERC indicator will be lit when the initial settings for the Analog I/O Unit are not set correctly. The alarm flags for the following errors will turn ON in

CIO word n+9. These alarm flags will turn OFF when the error is cleared and the Unit is restarted, or the Special I/O Unit Restart Bit is turned ON and then OFF again.

Word n + 9	Alarm flag	Error contents	I/O status	Countermeasure
Bit 08	Ratio Conversion Use Setting Error	The I/O number for the ratio conversion function has been set to be not used.	Conversion does not start and data becomes 0000.	Set the I/O number for use.
	Scaling Data Setting Error	There is a mistake in the upper or lower limit setting when scaling is used. The set value is exceeded, the upper limit equals the lower limit (not 0000), etc.		Correct the settings.
Bit 09	Ratio Set Value Error	A number outside of the 0 to 9999 BCD range has been specified for the ratio set value.		Specify a number from 0 to 9999 BCD.
Bit 10	Output Hold Setting Error	The wrong output status for when conversion is stopped has been specified.		Specify a number from 0000 to 0002.
Bit 11	Mean Value Processing Setting Error	The wrong number of samplings has been specified for mean processing.		Specify a number from 0000 to 0006.
Bit 12	Conversion Time/Resolution, Operation Mode Setting Error	The conversion time/resolution setting or operation mode setting is incorrect.		Set 00 hex or C1 hex.

9-10-3 Errors in the CPU Unit

When errors occur in the CPU Unit or I/O bus, and I/O refresh with the Special I/O Unit is not performed correctly resulting in the Analog I/O Unit malfunctioning, the ERH indicator will be lit.

ERH and RUN Indicators: Lit

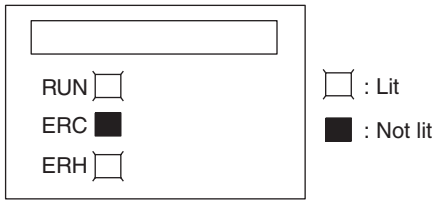

The ERH and RUN indicators will be lit if an error occurs in the I/O bus causing a WDT (watchdog timer) error in the CPU Unit, resulting in incorrect I/O refresh with the Analog I/O Unit.

Turn ON the power supply again or restart the system.
For further details, refer to *CJ-series Programmable Controllers Operation Manual* (W393).

Error	Error contents	Input condition	Output condition
I/O bus error	Error has occurred during data exchange with the CPU Unit.	Conversion data becomes 0000.	Depends on the output hold function.
CPU Unit monitoring error (See note.)	No response from CPU Unit during fixed period.	Maintains the condition existing before the error.	Maintains the condition existing before the error.
CPU Unit WDT error	Error has been generated in CPU Unit.	Changes to undefined state.	Depends on the output hold function.

Note No error will be detected by the CPU Unit or displayed on the Programming Console, because the CPU Unit is continuing operation.

ERH Indicator: Lit, RUN Indicator: Not Lit

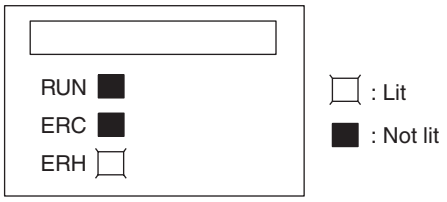

The unit number for the Analog I/O Unit has not been set correctly.

Error	Error contents	Input condition	Output condition
Duplicate Unit Number	The same unit number has been assigned to more than one Unit or the unit number was set to a value other than 00 to 95.	Conversion does not start and data becomes 0000.	The output value will be 0 V.
Special I/O Unit Setting Error	The Special I/O Units registered in the I/O table are different from the ones actually mounted.		

9-10-4 Restarting Special I/O Units

There are two ways to restart Special I/O Unit operation after having changed DM contents or having cleared the cause of an error. The first way is to turn the power to the PLC OFF and ON, and the second way is to turn ON the Special I/O Unit Restart Bit ON.

Special I/O Unit Restart Bits

Bits	Functions	
A50200	Unit #0 Restart Bit	Turning the Restart Bit for any Unit ON and then OFF again restarts that Unit.
A50201	Unit #1 Restart Bit	
to	to	
A50215	Unit #15 Restart Bit	
A50300	Unit #16 Restart Bit	
to	to	
A50715	Unit #95 Restart Bit	

If the error is not cleared even after turning the Special I/O Unit Restart Bit ON and then OFF again, then replace the Unit.

Input data will be 0000 and output will be 0 V or 0 mA during restart.

9-10-5 Troubleshooting

The following tables explain the probable causes of troubles that may occur, and the countermeasures for dealing with them.

Conversion Data Does Not Change

Probable cause	Countermeasure	Page
The input is not set for being used.	Set the input to be used.	400
The peak value hold function is in operation.	Turn OFF the peak value hold function if it is not required.	405
The input device is not working, the input wiring is wrong, or there is a disconnection.	Using a tester, check to see if the input voltage or current is changing.	---
	Use Unit's alarm flags to check for a disconnection.	408

Value Does Not Change as Intended

Probable cause	Countermeasure	Page
The input device's signal range does not match the input signal range for the relevant input number at the Analog I/O Unit.	Check the specifications of the input device, and match the settings for the input signal ranges.	373
The offset and gain are not adjusted.	Adjust the offset and gain.	418
When using the 4 mA to 20 mA range, the voltage/current switch is not turned ON.	Turn ON the voltage/current switch.	378, 385
The voltage and current ranges are not set in D (m+35).	Set D (m+35) correctly.	401
The ratio conversion function is set to be used, so the calculation results are being monitored.	Correct the conversion settings.	436

Conversion Values are Inconsistent

Probable cause	Countermeasure	Page
The input signals are being affected by external noise.	Change the shielded cable connection to the Unit's COM terminal.	390
	Insert a 0.01-μF to 0.1-μF ceramic capacitor or film capacitor between the input's (+) and (–) terminals.	---
	Try increasing the number of mean value processing buffers.	402

Analog Output Does Not Change

Probable Cause	Countermeasure	Page
The output is not set for being used.	Set the output to be used.	409
The output hold function is in operation.	Turn ON the Output Conversion Enable Bit.	412
The conversion value is set outside of the permissible range.	Set the data within the range.	375, 409

Output Does Not Change as Intended

Probable Cause	Countermeasure	Page
The output signal range setting is wrong.	Correct the output signal range setting.	410
The I/O specifications of the output device do not match those of the Analog I/O Unit (e.g., input signal range, input impedance).	Change the output device.	371
The offset or gain is not adjusted.	Adjust the offset or gain.	418
The voltage and current ranges are not set in D (m+35).	Set D (m+35) correctly.	401
The ratio conversion function is set to be used.	Correct the conversion settings.	415

Outputs are Inconsistent

Probable Cause	Countermeasure	Page
The output signals are being affected by external noise.	Try changing the shielded cable connection (e.g., the grounding at the output device).	---

Appendix A
Dimensions

CS-series Units: CS1W-AD041-V1/081-V1, CS1W-DA08V/08C/041, CS1W-MAD44

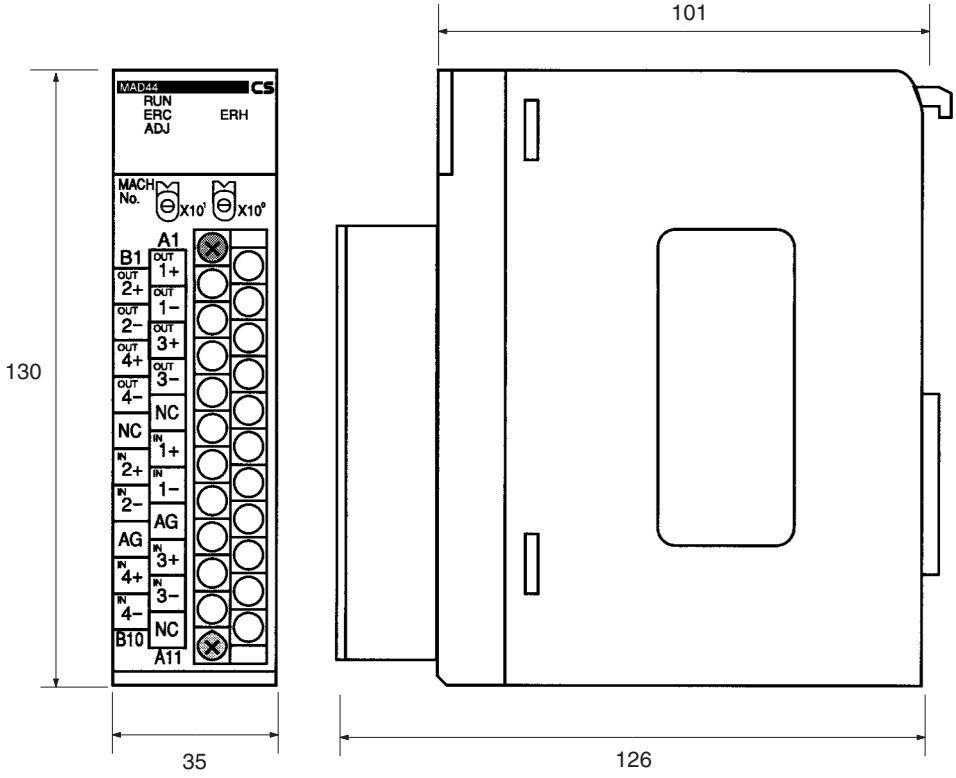

CS1W-AD161

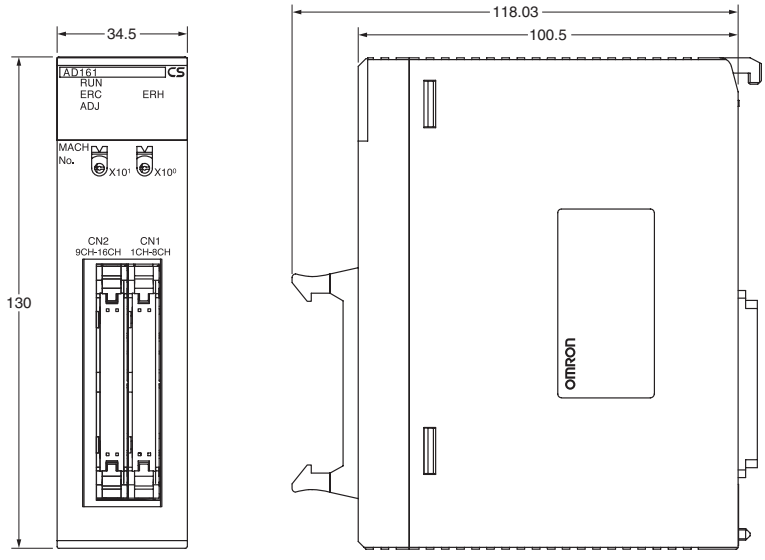

CS-series Unit Terminal Block Dimensions

Terminal size: M3

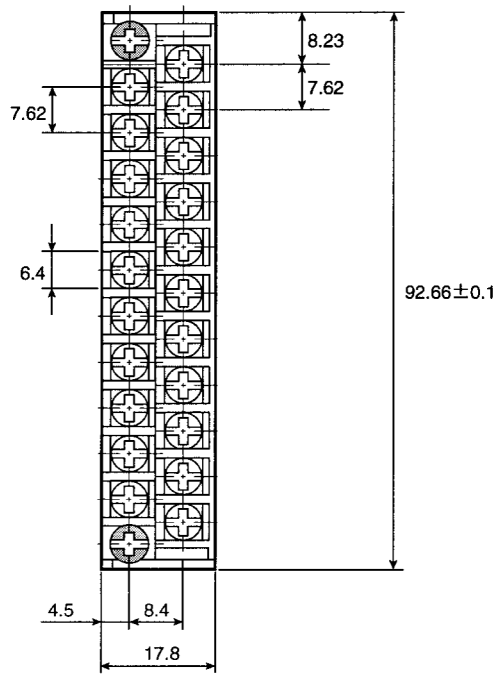

CJ-series Units: CJ1W-AD041-V1/081-V1/042, CJ1W-DA021/041/08V/08C/042V, CJ1W-MAD42

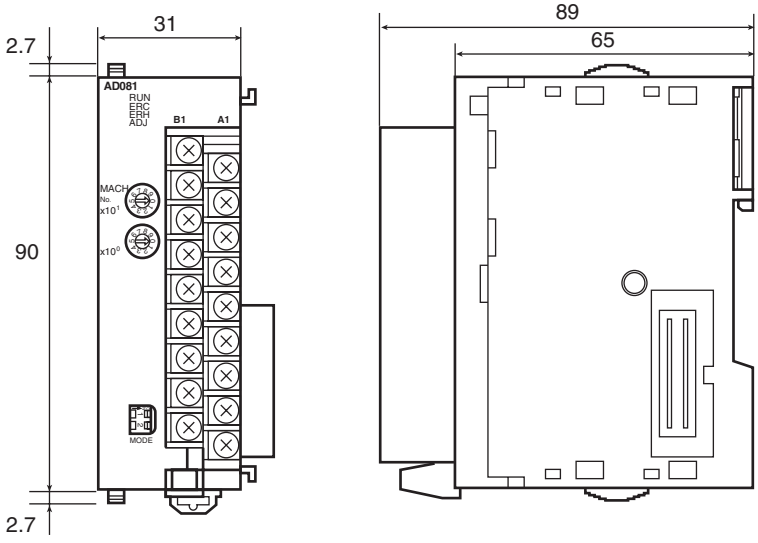

CJ-series Unit Terminal Block Dimensions

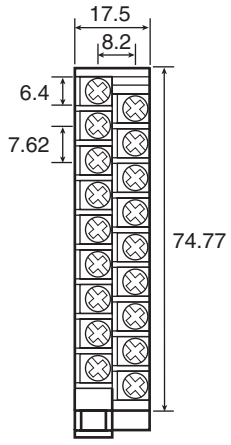

Note The appearance varies with the model.

Appendix B

Sample Programs

Obtaining Analog Input Conversion Values

This is a program for obtaining the Analog Input Unit's input conversion values. Individual input values are obtained by MOV(021) when their Disconnection Detection Flags are OFF.

Unit Settings

Item	Setting contents	Actual settings
Unit	CS1W-AD081-V1	---
Unit number	#0	Unit number switches: 00
Operation mode	Normal mode	Back-panel DIP switch: All OFF
Input number	Inputs 1 to 8 used	D20000 = 00FF
Input signal range	All input numbers, 1 to 5 V	D20001 = AAAA

Program Example

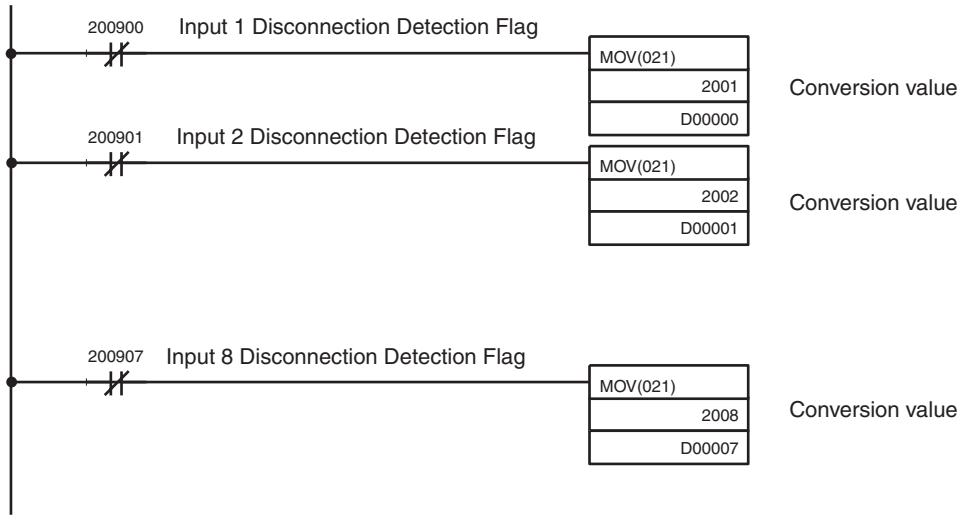

Writing Analog Output Set Values

This is a program for writing the Analog Output Unit's output set values.

Unit Settings

Item	Setting contents	Actual settings
Unit	CS1W-DA08V	---
Unit number	#0	Unit number switches: 00
Operation mode	Normal mode	Back-panel DIP switch: All OFF
Output number	Output 1 used	D20000 = 0001
Output signal range	Output number 1, 0 to 10 V	D20001 = 0001

Program Example

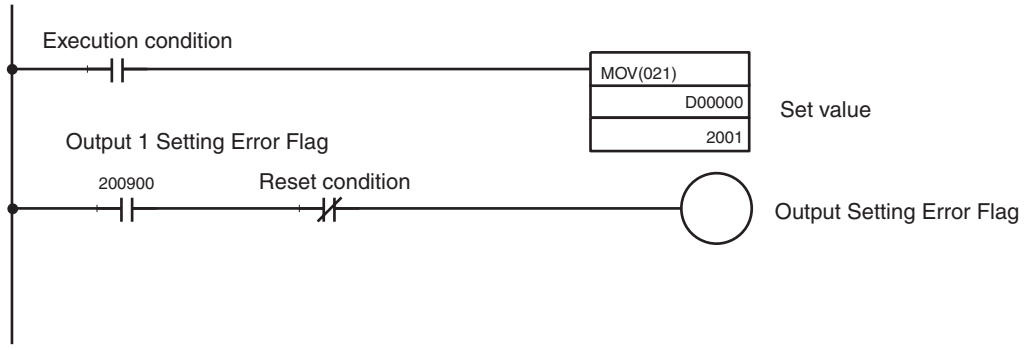

Upper and Lower-limit Alarm (Constant Monitoring)

Comparisons are made to the upper and lower limits of the A/D conversion values or D/A output values from the beginning of operation. If they fall outside the specified range, the Alarm Flag will turn ON.

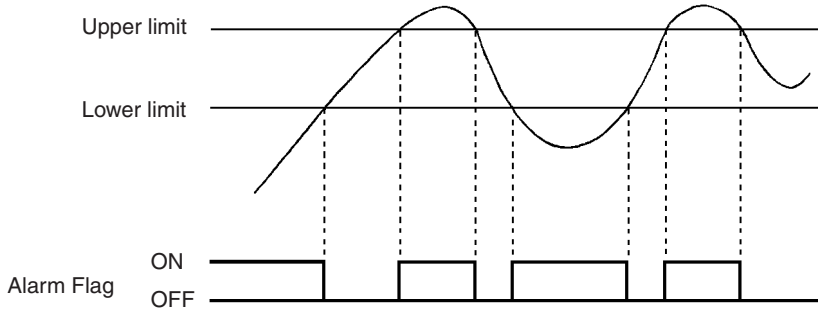

Unit Settings

Item	Setting contents	Actual settings
Unit	CS1W-AD081-V1	---
Unit number	#0	Unit number switches: 00
Operation mode	Normal mode	Back-panel DIP switch: All OFF
Input number	Input 1 used	D20000 = 0001
Input signal range	Input number 1, 0 to 10 V	D20001 = 0001

Program Example

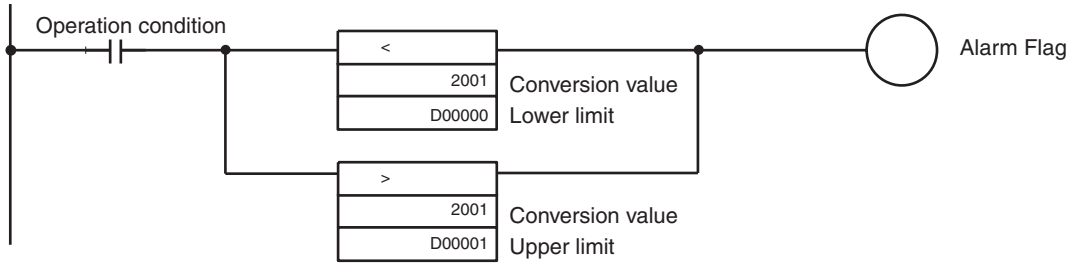

Upper and Lower-limit Alarm (with Standby Sequence)

Comparisons are made to the upper and lower limits of the A/D conversion values or D/A output values after the value falls within the range between the upper limit and lower limit following the beginning of operation. If they fall outside the specified range, the Alarm Flag will turn ON.

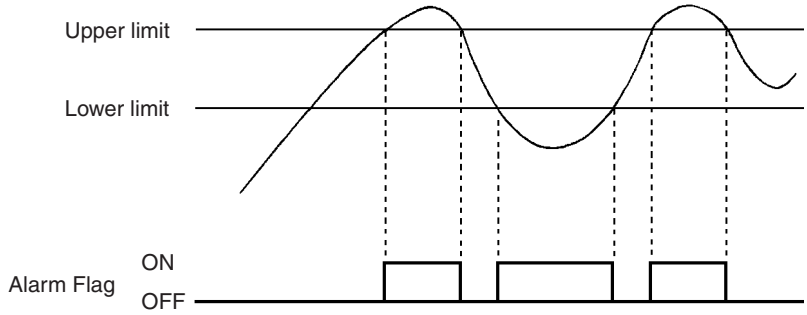

Unit Settings

Item	Setting contents	Actual settings
Unit	CS1W-AD081-V1	---
Unit number	#0	Unit number switches: 00
Operation mode	Normal mode	Back-panel DIP switch: All OFF
Input number	Input 1 used	D20000 = 0001
Input signal range	Input number 1, 0 to 10 V	D20001 = 0001

Program Example

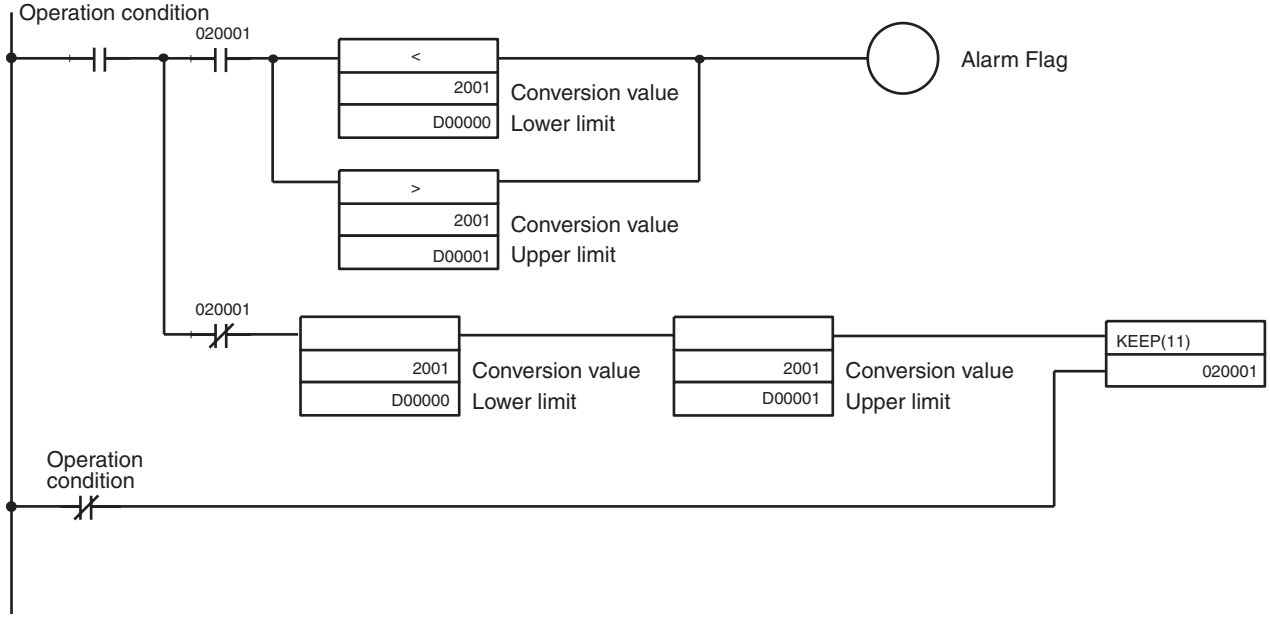

Scaling

Using the Scaling Functions

Note This function is supported only by the CS1W-AD161, CJ1W-MAD42, CJ1W-DA08V/08C/042V, and CJ1W-AD042.

Outline

A pressure sensor is connected to analog input 1 of CJ1W-MAD42. The pressure sensor outputs an analog signal of between 0 and 20 mA for a pressure between 0 and 500 Pa. Therefore, for a 4 to 20-mA input, a binary value of 0000 to 01F4 (0 to 500 decimal) in engineering units for the pressure in Pa is directly set using the MOV instruction. The analog input scaling function of the CJ1W-MAD42 is used here. Therefore, scaling in the ladder program (using the SCL or other instruction) is not required to convert the values 0000 to 0FA0 of the resolution to engineering units 0000 to 01F4.

Unit Settings

Item	Setting contents	Actual settings
Unit	CJ1W-MAD42	---
Unit number	#0	Unit number switches: 00
Input number	Input 1 (and output 1) used	D20000 = 0011
Input signal range	1 to 5 V/4 to 20 mA	D20001 = 0202
Voltage/current range	Current: 4 to 20 mA	D20035 = 0011
Conversion time/resolution setting and operation mode	Conversion time: 1 ms, resolution: 4,000 Normal mode	D20018 = 0000
Scaling settings for input 1	Lower limit: 0000 (0000 decimal) Upper limit: 01F4 (500 decimal)	D20027 (lower limit) = 0000 D20028 (upper limit) 01F4

Program Example

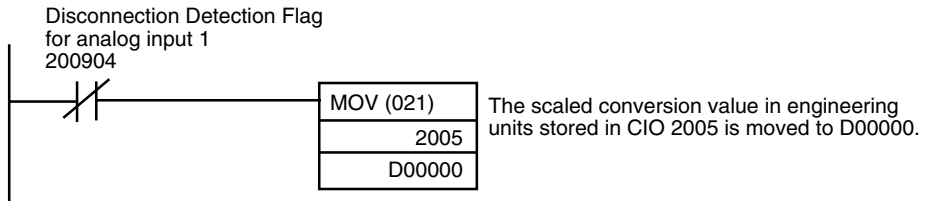

Not Using the Scaling Function

Outline

A/D conversion values are converted according to the linear function calculated from the offset and the values of ΔX and ΔY, and retrieved as scaling data.

- The following example uses at resolution of 4,000 and an input signal range of 1 to 5 V where 1 to 5 V is scaled to 0000 to 0300 (0°C to 300°C).

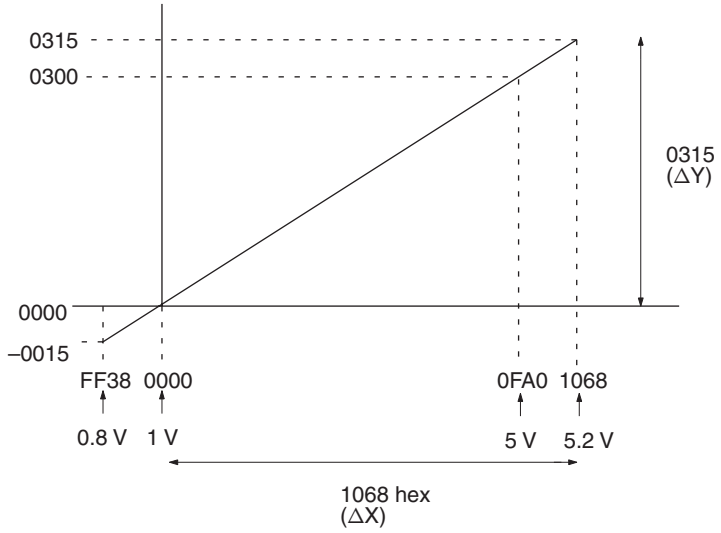

Unit Settings

Item	Setting contents	Actual settings
Unit	CS1W-AD081-V1	---
Unit number	#0	Unit number switches: 00
Operation mode	Normal mode	Back-panel DIP switch: All OFF
Input number	Input 1 used	D20000 = 0001
Input signal range	Input number 1, 1 to 5 V	D20001 = 0002

Program Example

- Data Flow (Unit Number 0):
  Word CIO 2001 (A/D Conversion Value) → D00200 (Scaling Result)

The value of word CIO 2005 is scaled according to the linear function calculated using the offset (0000 hex), and the values of ΔX (1068 hex) and ΔY (0315 hex). The scaled value is then stored in word D00200.

DM Area Settings

D00100: 0000	Offset
D00101: 1068	ΔX value
D00102: 0315	ΔY value

Note The value scaled using SCL2(486) is stored as positive or negative BCD data according to the status of the CY (Carry) Flag. To convert the BCD data into signed binary data, use the SCL3(487) instruction.

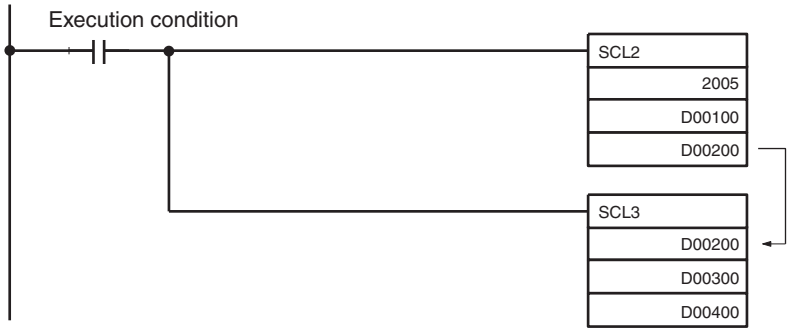

DM Area Settings

D00300: 0000	- - - -	Offset
D00301: 0200	- - - -	ΔX value
D00302: 00C8	- - - -	ΔY value
D00303: 00C8	- - - -	Maximum conversion value
D00304: FF9C	- - - -	Minimum conversion value

Signed Binary-to-Signed BCD Conversion

A/D conversion values (16-bit binary data) are recognized as 4-digit signed binary data, and converted into 8-digit signed BCD data. When the leftmost bit is 1, the binary data is recognized as a two's complement. The "signed BCD" data refers to BCD data that is indicated by 7-digit data and 1-digit sign (0: +; F: –).

- Conversion Graph (Horizontal Axis: Input Voltage, Vertical Axis: BCD Data)

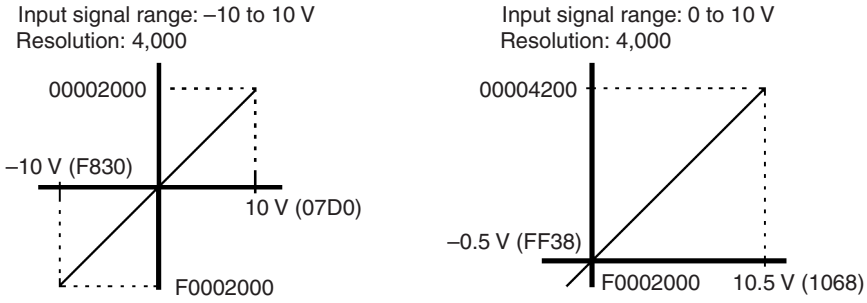

Unit Settings

Item	Setting contents	Actual settings
Unit	CS1W-AD081-V1	---
Unit number	#0	Unit number switches: 00
Operation mode	Normal mode	Back-panel DIP switch: All OFF
Input number	Input 1 used	D20000 = 0001
Input signal range	Input number 1, 0 to 10 V	D20001 = 0001

Program Example

- Data Flow (Unit Number 0):
  Word 2001 (A/D Conversion Value) → Words 0201 and 0200 (Conversion Result)

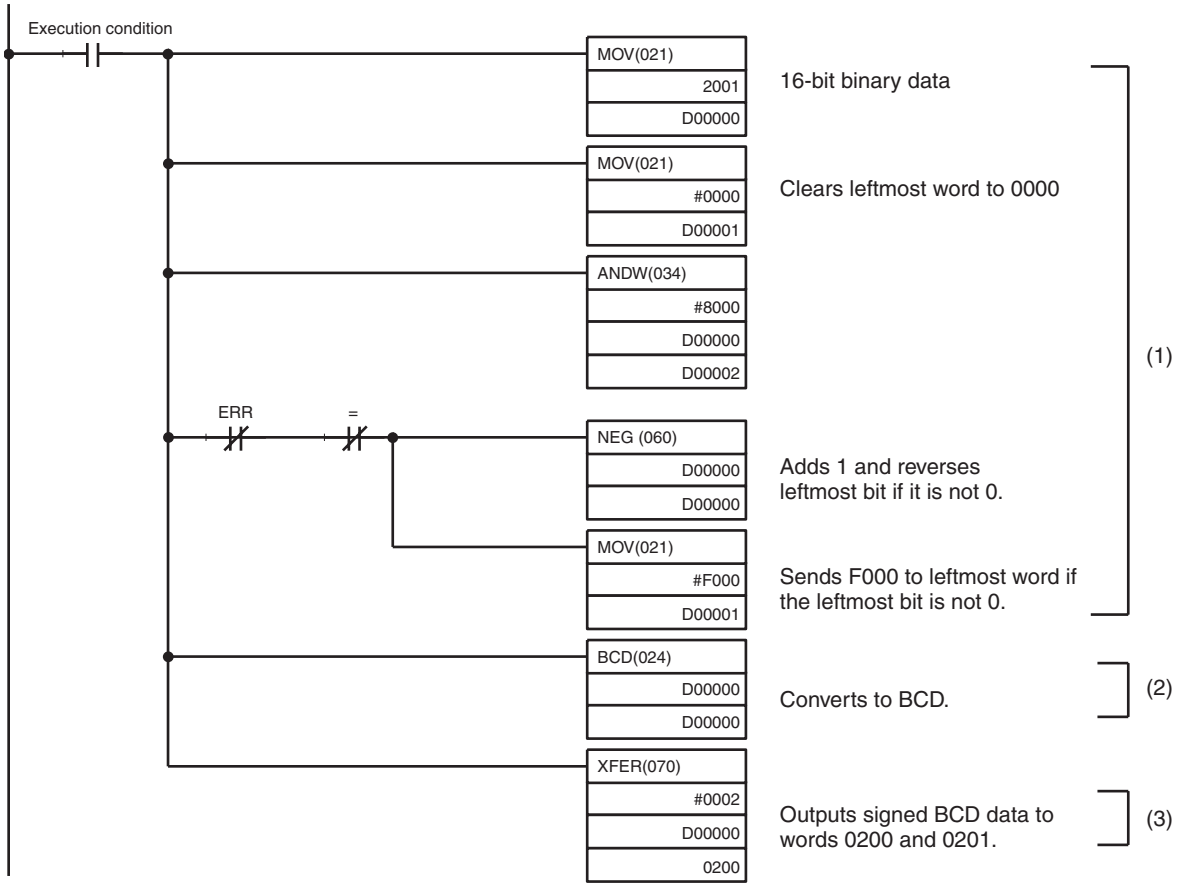

(1) If the leftmost bit is a 1 (negative number) in 16-bit binary data, the data is reversed and the leftmost word becomes F000.

(2) 16-bit binary data is converted to BCD.

(3) Signed BCD data is output to words 0200 and 0201.

Square Root Calculation

Data expressed as quadratic curves, such as thermocouple inputs, is converted and output to linear data (0000 to 4000).

Unit Settings

Item	Setting contents	Actual settings
Unit	CS1W-AD081-V1	---
Unit number	#0	Unit number switches: 00
Operation mode	Normal mode	Back-panel DIP switch: All OFF
Input number	Input 1 used	D20000 = 0001
Input signal range	Input number 1, 0 to 10 V	D20001 = 0001

Program Example

- Data Flow (Unit Number 0): Word 2001 (A/D Conversion Value) → Word 0200 (Calculation Result)

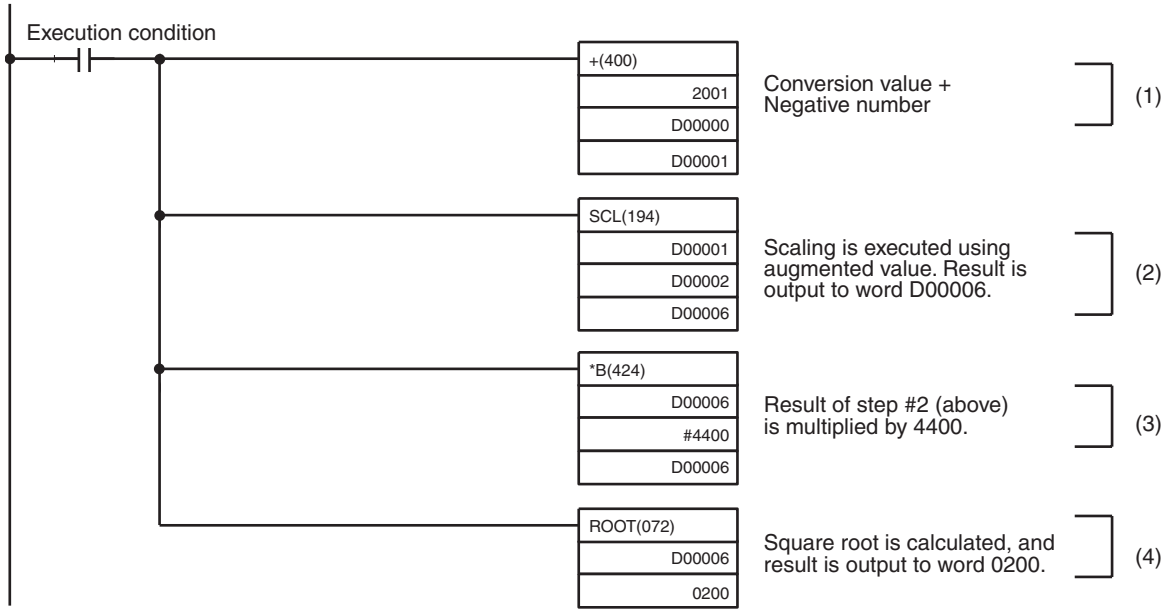

(1) The negative number portion is added to the conversion value (word 2001).

(2) The binary data is scaled to a range of 0 to 4000.

(3) The scaling results are multiplied by 4400.

(4) The square root is calculated, and the result is output to word 0200.

DM Area Settings

Input signal range: 0 to 10 V / 1 to 5 V / 4 to 20 mA

D00000: 00C8	Digital value for –5%	
D00001: (Used for calculation)	Conversion value +C8 (–5% portion)	
D00002: 0000	Lower limit: BCD	
D00003: 0000	Lower limit +C8 (–5% portion): Binary	Used with SCL(194) instruction
D00004: 4400	Upper limit: BCD	
D00005: 1130	Upper limit +C8 (–5% portion): Binary	
D00006: (Used for calculation)		

If the result of the binary-to-BCD conversion is negative, an error will be generated by the ROOT(072) instruction.

With a signal range of –10 to 10 V, scaling is executed by augmenting the negative portion (–10 V –5%). In this program example, the value of D00000 is converted to 0898. Refer to *Scaling* on page 448 for details.

Mean Value Processing

Data is taken for the set number of samplings and the mean value is calculated.

Unit Settings

Item	Setting contents	Actual settings
Unit	CS1W-AD081-V1	---
Unit number	#0	Unit number switches: 00
Operation mode	Normal mode	Back-panel DIP switch: All OFF
Input number	Input 1 used	D20000 = 0001
Input signal range	Input number 1, 0 to 10 V	D20001 = 0001

Program Example

- Data Flow (Unit Number 0): Word 2001 (AD Conversion Value) → D00001 (Mean Value Result)

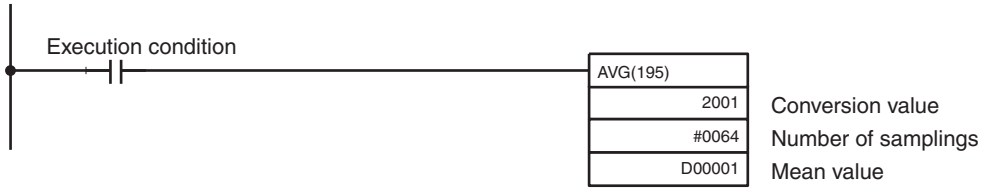

Limit

If the output value range is exceeded, the output voltage is held when the Conversion Enable Flag turns OFF.

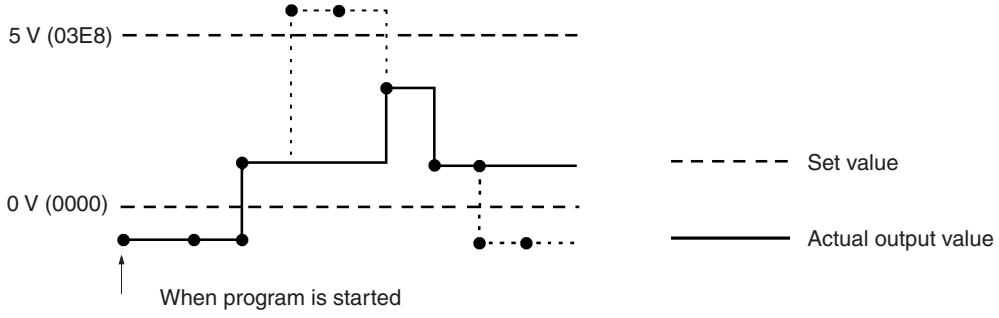

Unit Settings

Item	Setting contents	Actual settings
Unit	CS1W-DA08V	---
Unit number	#0	Unit number switches: 00
Operation mode	Normal mode	Back-panel DIP switch: All OFF
Output number	Output 1 used	D20000 = 0001
Output signal range	All output numbers, 0 to 10 V	D20001 = 0001
Output hold function	HOLD	D20002 = 0001

Program Example

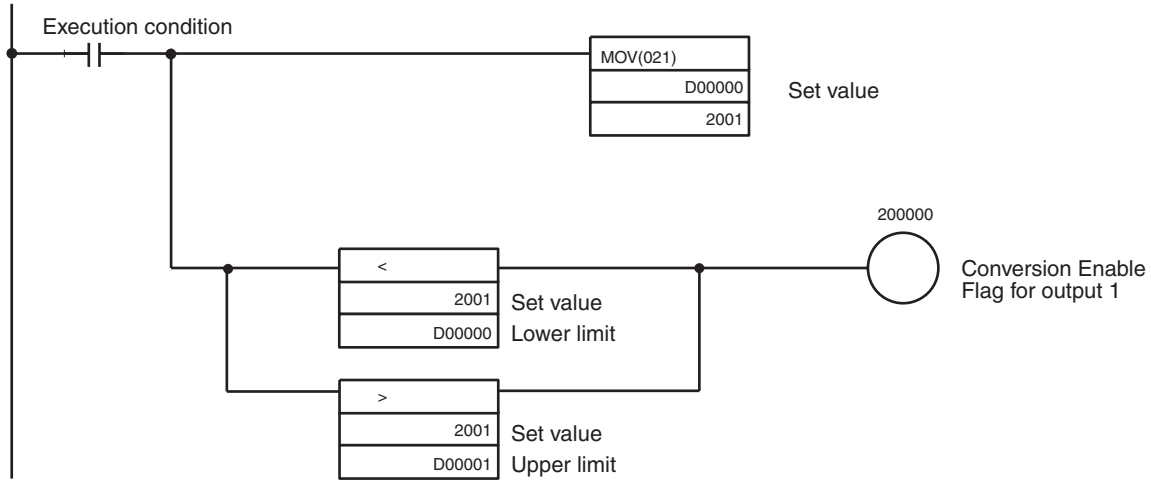

DM Area Settings

D00001: 0000	Lower limit: 0 V
D00002: 03E8	Upper limit: 5 V

Appendix C
Data Memory Coding Sheets

CS1W-AD041-V1/CJ1W-AD041-V1

DM word	Setting contents															
	15	14	13	12	11	10	09	08	07	06	05	04	03	02	01	00
D2□□00	0				0				0							
D2□□01	0				0											
D2□□02	0				0				0							
D2□□03	0				0				0							
D2□□04	0				0				0							
D2□□05	0				0				0							
D2□□18																

DM word	Setting contents	
	15 8	7 0
m		Input use designation
m+1		Input signal range setting
m+2	Input 1: Mean value processing setting	
m+3	Input 2: Mean value processing setting	
m+4	Input 3: Mean value processing setting	
m+5	Input 4: Mean value processing setting	
m+18	Conversion time/ resolution setting	Operation mode setting

Use Designation

03	02	01	00
Input 4	Input 3	Input 2	Input 1

0: Do not use.
1: Use

Signal Range Setting

07	06	05	04	03	02	01	00
Input 4		Input 3		Input 2		Input 1	

00: –10 to 10 V
01: 0 to 10 V
10: 1 to 5 V / 4 to 20 mA (change using voltage/current switch)
11: 0 to 5 V

Mean Value Processing Setting

15 12	11 08	07 04	03 00
16^3	16^2	16^1	16^0

0000: Mean value processing with 2 buffers.
0001: No mean value processing
0002: Mean value processing with 4 buffers.
0003: Mean value processing with 8 buffers.
0004: Mean value processing with 16 buffers.
0005: Mean value processing with 32 buffers.
0006: Mean value processing with 64 buffers.

Conversion Time/Resolution Setting

15 12	11 08
16^3	16^2

00: Conversion time of 1 ms and resolution of 4,000
C1: Conversion time of 250 μs and resolution of 8,000

Operation Mode Setting

07 04	03 00
16^1	16^0

00: Normal mode
C1: Adjustment mode

Note m = 20000 + unit number x 100 is allocated as the DM number.

CS1W-AD081-V1/CJ1W-AD081-V1

DM word	Setting contents															
	15	14	13	12	11	10	09	08	07	06	05	04	03	02	01	00
D2□□00	0				0											
D2□□01																
D2□□02	0				0				0							
D2□□03	0				0				0							
D2□□04	0				0				0							
D2□□05	0				0				0							
D2□□06	0				0				0							
D2□□07	0				0				0							
D2□□08	0				0				0							
D2□□09	0				0				0							
D2□□18									0							

DM word	Setting contents	
	15 8	7 0
m	Not used.	Input use designation
m+1		
m+2	Input 1: Mean value processing setting	
m+3	Input 2: Mean value processing setting	
m+4	Input 3: Mean value processing setting	
m+5	Input 4: Mean value processing setting	
m+6	Input 5: Mean value processing setting	
m+7	Input 6: Mean value processing setting	
m+8	Input 7: Mean value processing setting	
m+9	Input 8: Mean value processing setting	
m+18	Conversion time/ resolution setting	Operation mode setting

Use Designation

07	06	05	04	03	02	01	00
Input 8	Input 7	Input 6	Input 5	Input 4	Input 3	Input 2	Input 1

0: Do not use.
1: Use

Signal Range Setting

07	06	05	04	03	02	01	00
Input 4		Input 3		Input 2		Input 1	

15	14	13	12	11	10	09	08
Input 8		Input 7		Input 6		Input 5	

00: –10 to 10 V
01: 0 to 10 V
10: 1 to 5 V / 4 to 20 mA (change using voltage/current switch)
11: 0 to 5 V

Mean Value Processing Setting

15 12	11 08	07 04	03 00
16^3	16^2	16^1	16^0

0000: Mean value processing with 2 buffers.
0001: No mean value processing
0002: Mean value processing with 4 buffers.
0003: Mean value processing with 8 buffers.
0004: Mean value processing with 16 buffers.
0005: Mean value processing with 32 buffers.
0006: Mean value processing with 64 buffers.

Conversion Time/Resolution Setting

15 12	11 08
16^3	16^2

00: Conversion time of 1 ms and resolution of 4,000
C1: Conversion time of 250 μs and resolution of 8,000

Operation Mode Setting

07 04	03 00
16^1	16^0

00: Normal mode
C1: Adjustment mode

Note m = 20000 + unit number x 100 is allocated as the DM number.

CS1W-AD161

□□: Unit number

DM Area address	Bit															
	15	14	13	12	11	10	09	08	07	06	05	04	03	02	01	00
D2□□00																
D2□□01																
D2□□02																
D2□□03																
D2□□04																
D2□□05																
D2□□06																
D2□□07																
D2□□08																
D2□□09																
D2□□10																
D2□□11																
D2□□12																
D2□□13																
D2□□14																
D2□□15																
D2□□16																
D2□□17																
D2□□18																
D2□□19																
D2□□20																
D2□□21																
D2□□22																
D2□□23																
D2□□24																
D2□□25																
D2□□26																
D2□□27																
D2□□28																
D2□□29																
D2□□30																
D2□□31																
D2□□32																
D2□□33																
D2□□34																
D2□□35																
D2□□36																
D2□□37																
D2□□38																
D2□□39																
D2□□40																
D2□□41																
D2□□42																
D2□□43																
D2□□44																

DM Area address	Bit															
	15	14	13	12	11	10	09	08	07	06	05	04	03	02	01	00
D2□□45																
D2□□46																
D2□□47																
D2□□48																
D2□□49																
D2□□50																
D2□□51																
D2□□52																

m = D20000 + unit number x 100

DM Area address	Setting contents	
	15 to 08	07 to 00
m	Input use setting	
m+1	Input signal range setting (inputs 1 to 8)	
m+2	Input signal range setting (inputs 9 to 16)	
m+3	Input 1 mean value processing setting	
m+4	Input 2 mean value processing setting	
m+5	Input 3 mean value processing setting	
m+6	Input 4 mean value processing setting	
m+7	Input 5 mean value processing setting	
m+8	Input 6 mean value processing setting	
m+9	Input 7 mean value processing setting	
m+10	Input 8 mean value processing setting	
m+11	Input 9 mean value processing setting	
m+12	Input 10 mean value processing setting	
m+13	Input 11 mean value processing setting	
m+14	Input 12 mean value processing setting	
m+15	Input 13 mean value processing setting	
m+16	Input 14 mean value processing setting	
m+17	Input 15 mean value processing setting	
m+18	Input 16 mean value processing setting	
m+19	Conversion time/resolution setting	Operation mode setting
m+20	Input 1 scaling lower limit	
m+21	Input 1 scaling upper limit	
m+22	Input 2 scaling lower limit	
m+23	Input 2 scaling upper limit	
m+24	Input 3 scaling lower limit	
m+25	Input 3 scaling upper limit	
m+26	Input 4 scaling lower limit	
m+27	Input 4 scaling upper limit	
m+28	Input 5 scaling lower limit	
m+29	Input 5 scaling upper limit	
m+30	Input 6 scaling lower limit	
m+31	Input 6 scaling upper limit	
m+32	Input 7 scaling lower limit	
m+33	Input 7 scaling upper limit	
m+34	Input 8 scaling lower limit	
m+35	Input 8 scaling upper limit	

DM Area address	Setting contents	
	15 to 08	07 to 00
m+36	Input 9 scaling lower limit	
m+37	Input 9 scaling upper limit	
m+38	Input 10 scaling lower limit	
m+39	Input 10 scaling upper limit	
m+40	Input 11 scaling lower limit	
m+41	Input 11 scaling upper limit	
m+42	Input 12 scaling lower limit	
m+43	Input 12 scaling upper limit	
m+44	Input 13 scaling lower limit	
m+45	Input 13 scaling upper limit	
m+46	Input 14 scaling lower limit	
m+47	Input 14 scaling upper limit	
m+48	Input 15 scaling lower limit	
m+49	Input 15 scaling upper limit	
m+50	Input 16 scaling lower limit	
m+51	Input 16 scaling upper limit	
m+52	Voltage/current range setting (Only for 1 to 5 V and 4 to 20 mA.)	

m = D20000 + unit number x 100

Input Use Setting

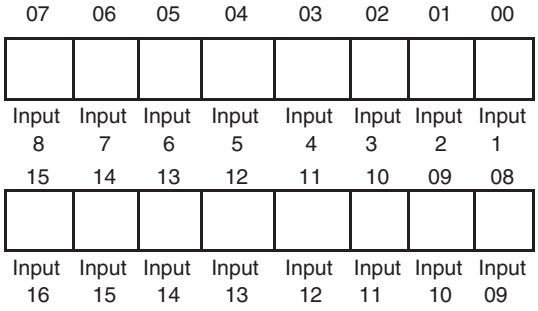

0: Not used
1: Used

Input Signal Range Setting

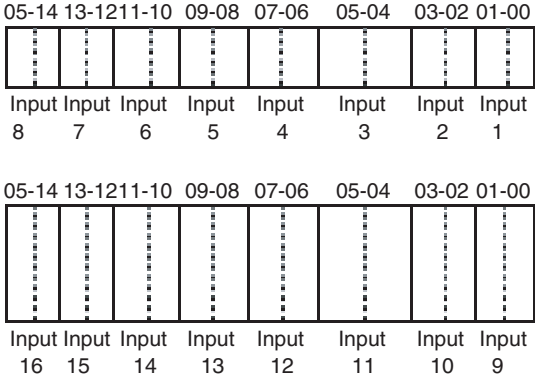

00: –10 to +10 V
01: 0 to 10 V
10: 1 to 5 V/4 to 20 mA (Select voltage/current in DM word m+52)
10: 0 to 5 V

Mean Value Processing Setting

15 to 12	11 to 08	07 to 04	03 to 00
16^3	16^2	16^1	16^0

0000: Mean value processing with 2 buffers
0001: No mean value processing
0002: Mean value processing with 4 buffers
0003: Mean value processing with 8 buffers
0004: Mean value processing with 16 buffers
0005: Mean value processing with 32 buffers
0006: Mean value processing with 64 buffers

Conversion Time/Resolution or Operation Mode Setting

15 to 12	11 to 08		07 to 04	03 to 00
16^3	16^2		16^1	16^0
00: Conversion time = 1 ms /resolution of 4,000 C1: Conversion time = 1 ms /resolution of 4,000			00: Normal mode 01: Adjustment mode	

Scaling data

–32000 to +32000

Voltage/current range setting (Only for 1 to 5 V and 4 to 20 mA.)

07	06	05	04	03	02	01	00
Input 8	Input 7	Input 6	Input 5	Input 4	Input 3	Input 2	Input 1

15	14	13	12	11	10	09	08
Input 16	Input 15	Input 14	Input 13	Input 12	Input 11	Input 10	Input 9

0: Voltage
1: Current

CJ1W-DA021

DM word	Setting contents															
	15	14	13	12	11	10	09	08	07	06	05	04	03	02	01	00
D2□□00	0				0				0				0	0		
D2□□01	0				0				0							
D2□□02	0				0				0							
D2□□03	0				0				0							

DM word	Setting contents			
	15	8	7	0
m			---	Output use designation
m+1			---	Output signal range setting
m+2			Output 1: Output status when conversion stopped	
m+3			Output 2: Output status when conversion stopped	

Use Designation

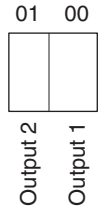

0: Do not use.
1: Use

Signal Range Setting

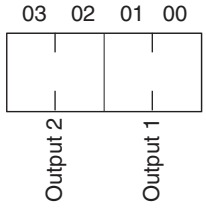

00: –10 to 10V
01: 0 to 10 V
10: 1 to 5 V / 4 to 20 mA
11: 0 to 5 V

Output Status when Conversion Stopped

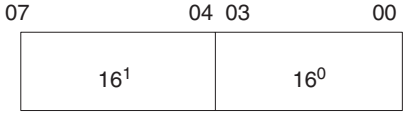

00: CLR (0 or minimum value for each range output)
01: HOLD (Hold prior output value.)
02: MAX (Output maximum value of range.)

Note m = 20000 + unit number x 100 is allocated as the DM number.

CS1W-DA041/CJ1W-DA041

DM word	Setting contents															
	15	14	13	12	11	10	09	08	07	06	05	04	03	02	01	00
D2□□00	0				0				0							
D2□□01	0				0											
D2□□02	0				0				0							
D2□□03	0				0				0							
D2□□04	0				0				0							
D2□□05	0				0				0							

DM word	Setting contents	
	15 – 8	7 – 0
m		Output use designation
m+1		Output signal range setting
m+2		Output 1: Output status when conversion stopped
m+3		Output 2: Output status when conversion stopped
m+4		Output 3: Output status when conversion stopped
m+5		Output 4: Output status when conversion stopped

Use Designation

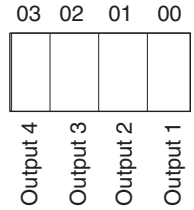

0: Do not use.
1: Use

Signal Range Setting

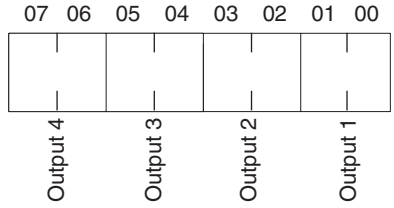

00: –10 to 10V
01: 0 to 10 V
10: 1 to 5 V / 4 to 20 mA
11: 0 to 5 V

Output Status when Conversion Stopped

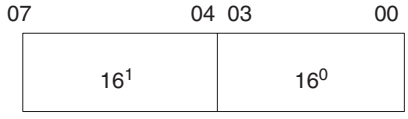

00: CLR (0 or minimum value for each range output)
01: HOLD (Hold prior output value.)
02: MAX (Output maximum value of range.)

Note m = 20000 + unit number x 100 is allocated as the DM number.

CS1W-DA08V/08C

DM word	Setting contents															
	15	14	13	12	11	10	09	08	07	06	05	04	03	02	01	00
D2□□00	0				0											
D2□□01																
D2□□02	0				0				0							
D2□□03	0				0				0							
D2□□04	0				0				0							
D2□□05	0				0				0							
D2□□06	0				0				0							
D2□□07	0				0				0							
D2□□08	0				0				0							
D2□□09	0				0				0							

DM word	Setting contents	
	15 8	7 0
m		Output use designation
m+1	Output signal range setting	
m+2		Output 1: Output status when conversion stopped
m+3		Output 2: Output status when conversion stopped
m+4		Output 3: Output status when conversion stopped
m+5		Output 4: Output status when conversion stopped
m+6		Output 5: Output status when conversion stopped
m+7		Output 6: Output status when conversion stopped
m+8		Output 7: Output status when conversion stopped
m+9		Output 8: Output status when conversion stopped

Use Designation

07	06	05	04	03	02	01	00
Output 8	Output 7	Output 6	Output 5	Output 4	Output 3	Output 2	Output 1

0: Do not use.
1: Use

Signal Range Setting (not valid for CS1W-DA08C)

07	06	05	04	03	02	01	00
Output 4		Output 3		Output 2		Output 1	

15	14	13	12	11	10	09	08
Output 8		Output 7		Output 6		Output 5	

00: –10 to 10 V
01: 0 to 10 V
10: 1 to 5 V
11: 0 to 5 V

Output Status when Conversion Stopped

07 04	03 00
16^1	16^0

00: CLR (0 or minimum value for each range output)
01: HOLD (Hold prior output value.)
02: MAX (Output maximum value of range.)

Note m = 20000 + unit number x 100 is allocated as the DM number.

CJ1W-DA08V/08C

DM word	Setting contents															
	15	14	13	12	11	10	09	08	07	06	05	04	03	02	01	00
D2□□00	0				0											
D2□□01																
D2□□02	0				0				0							
D2□□03	0				0				0							
D2□□04	0				0				0							
D2□□05	0				0				0							
D2□□06	0				0				0							
D2□□07	0				0				0							
D2□□08	0				0				0							
D2□□09	0				0				0							
D2□□18																
D2□□20																
D2□□21																
D2□□22																
D2□□23																
D2□□24																
D2□□25																
D2□□26																
D2□□27																
D2□□28																
D2□□29																
D2□□30																
D2□□31																
D2□□32																
D2□□33																
D2□□34																

DM word	Setting contents	
	15 8	7 0
m	---	Output use designation
m+1	Output signal range settings	
m+2	---	Output 1: Output status when conversion stopped
m+3	---	Output 2: Output status when conversion stopped
m+4	---	Output 3: Output status when conversion stopped
m+5	---	Output 4: Output status when conversion stopped
m+6	---	Output 5: Output status when conversion stopped
m+7	---	Output 6: Output status when conversion stopped
m+8	---	Output 7: Output status when conversion stopped
m+9	---	Output 8: Output status when conversion stopped
m+10 to m+17	---	
m+18	Conversion time/ resolution setting	Operation mode setting
m+19	Output 1 scaling lower limit	
m+20	Output 1 scaling upper limit	
m+21	Output 2 scaling lower limit	
m+22	Output 2 scaling upper limit	
m+23	Output 3 scaling lower limit	
m+24	Output 3 scaling upper limit	
m+25	Output 4 scaling lower limit	
m+26	Output 4 scaling upper limit	
m+27	Output 5 scaling lower limit	
m+28	Output 5 scaling upper limit	
m+29	Output 6 scaling lower limit	
m+30	Output 6 scaling upper limit	
m+31	Output 7 scaling lower limit	
m+32	Output 7 scaling upper limit	
m+33	Output 8 scaling lower limit	
m+34	Output 8 scaling upper limit	

Use Designation

07	06	05	04	03	02	01	00
Output 8	Output 7	Output 6	Output 5	Output 4	Output 3	Output 2	Output 1

0: Do not use
1: Use

Output Signal Range Settings
(Not valid for the CJ1W-DA08C.)

07	06	05	04	03	02	01	00
Output 4		Output 3		Output 2		Output 1	

15	14	13	12	11	10	09	08
Output 8		Output 7		Output 6		Output 5	

00: –10 to 10 V
01: 0 to 10 V
10: 1 to 5 V
11: 0 to 5 V

Output Status when Conversion Stopped

07 04	03 00
16^1	16^0

00: CLR (0 or minimum value for each range output)
01: HOLD (Hold prior output value.)
02: MAX (Output maximum value of range.)

Conversion Time and Resolution Setting

15 12	11 08

00: Conversion time = 1 ms, resolution = 4,000
C1: Conversion time = 250 μs, resolution = 8,000

Operation Mode

07 04	03 00

00: Normal mode
C1: Adjustment mode

Note m = 20000 + unit number x 100 is allocated as the DM number.

CS1W-MAD44

DM word	Setting contents			
	15 14 13 12	11 10 09 08	07 06 05 04	03 02 01 00
D2□□00				
D2□□01				
D2□□02	0	0	0	
D2□□03	0	0	0	
D2□□04	0	0	0	
D2□□05	0	0	0	
D2□□06	0	0	0	
D2□□07	0	0	0	
D2□□08	0	0	0	
D2□□09	0	0	0	
D2□□10				
D2□□11				
D2□□12				
D2□□13				
D2□□14				
D2□□15				
D2□□16				
D2□□17				

DM word	Setting contents			
	15	8	7	0
m	Ratio conversion use designation		Input use designation	Output use designation
m+1	Input signal range setting		Output signal range setting	
m+2			Output 1: Output status when conversion stopped	
m+3			Output 2: Output status when conversion stopped	
m+4			Output 3: Output status when conversion stopped	
m+5			Output 4: Output status when conversion stopped	
m+6	Input 1: Mean value processing setting			
m+7	Input 2: Mean value processing setting			
m+8	Input 3: Mean value processing setting			
m+9	Input 4: Mean value processing setting			
m+10	Loop 1 (input 1 → output 1), A constant			
m+11	Loop 1 (input 1 → output 1), B constant			
m+12	Loop 2 (input 2 → output 2), A constant			
m+13	Loop 2 (input 2 → output 2), B constant			
m+14	Loop 3 (input 3 → output 3), A constant			
m+15	Loop 3 (input 3 → output 3), B constant			
m+16	Loop 4 (input 4 → output 4), A constant			
m+17	Loop 4 (input 4 → output 4), B constant			

Use Designation

07	06	05	04	03	02	01	00
Input 4	Input 3	Input 2	Input 1	Output 4	Output 3	Output 2	Output 1

0: Do not use.
1: Use

15	14	13	12	11	10	09	08
Loop 4		Loop 3		Loop 2		Loop 1	

00: Do not use.
01: Positive gradient conversion
10: Negative gradient conversion
11: Same as the above "00" setting

Signal Range Setting

07	06	05	04	03	02	01	00
Output 4		Output 3		Output 2		Output 1	

15	14	13	12	11	10	09	08
Input 4		Input 3		Input 2		Input 1	

00: –10 to 10 V
01: 0 to 10 V
10: 1 to 5 V / 4 to 20 mA (4 to 20 mA is for analog input only)
11: 0 to 5 V

Output Status when Conversion Stopped

07	04	03	00
16^1		16^0	

00: CLR (0 or minimum value for each range output)
01: HOLD (Hold prior output value.)
02: MAX (Output maximum value of range.)

Mean Value Processing Setting

15	12	11	08	07	04	03	00
16^3		16^2		16^1		16^0	

0000: Mean value processing with 2 buffers.
0001: No mean value processing
0002: Mean value processing with 4 buffers.
0003: Mean value processing with 8 buffers.
0004: Mean value processing with 16 buffers.
0005: Mean value processing with 32 buffers.
0006: Mean value processing with 64 buffers.

A Constant
0 to 9999 BCD (0.00 to 99.99; unit: 0.01)

B Constant
16-bit binary data

Note m = 20000 + unit number x 100 is allocated as the DM number.

CJ1W-MAD42

DM word	Setting contents															
	15	14	13	12	11	10	09	08	07	06	05	04	03	02	01	00
D2□□00													0	0		
D2□□01																
D2□□02	0				0				0							
D2□□03	0				0				0							
D2□□06	0				0				0							
D2□□07	0				0				0							
D2□□08	0				0				0							
D2□□09	0				0				0							
D2□□10																
D2□□11																
D2□□12																
D2□□13																
D2□□18																
D2□□19																
D2□□20																
D2□□21																
D2□□22																
D2□□27																
D2□□28																
D2□□29																
D2□□30																
D2□□31																
D2□□32																
D2□□33																
D2□□34																
D2□□35																
D2□□35	0				0								0	0		

DM word	Setting contents		
	15 8	7	0
m	Ratio conversion use designation	Input use designation	Output use designation
m+1	Input signal range setting	Output signal range setting	
m+2	---	Output 1: Output status when conversion stopped	
m+3	---	Output 2: Output status when conversion stopped	
m+4	---		
m+5	---		
m+6	Input 1: Mean value processing setting		
m+7	Input 2: Mean value processing setting		
m+8	Input 3: Mean value processing setting		
m+9	Input 4: Mean value processing setting		
m+10	Loop 1 (input 1 → output 1), A constant		
m+11	Loop 1 (input 1 → output 1), B constant		
m+12	Loop 2 (input 1 → output 1), A constant		
m+13	Loop 2 (input 1 → output 1), B constant		
m+14 to m+17	---		
m+18	Conversion time/ resolution setting	Operation mode setting	
m+19	Output 1 scaling lower limit		
m+20	Output 1 scaling upper limit		
m+21	Output 2 scaling lower limit		
m+22	Output 2 scaling upper limit		
m+23 to m+26	---		
m+27	Input 1 scaling lower limit		
m+28	Input 1 scaling upper limit		
m+29	Input 2 scaling lower limit		
m+30	Input 2 scaling upper limit		
m+31	Input 3 scaling lower limit		
m+32	Input 3 scaling upper limit		
m+33	Input 4 scaling lower limit		
m+34	Input 4 scaling upper limit		
m+35	Voltage/current range setting (Valid for 1 to 5 V or 4 to 20 mA.)		
	---	Input	--- Output

Use Designation

07	06	05	04	03	02	01	00
Input 4	Input 3	Input 2	Input 1			Out-put 2	Out-put 1

0: Do not use.
1: Use

15	12	11	10	09	08
		Loop 2		Loop 1	

00: Do not use.
01: Positive gradient conversion
10: Negative gradient conversion
11: Same as the above "00" setting

Signal Range Setting

07	03	02	01	00
	Output 2		Output 1	

15	14	13	12	11	10	09	08
Input 4		Input 3		Input 2		Input 1	

00: –10 to 10 V
01: 0 to 10 V
10: 1 to 5 V/4 to 20 mA
11: 0 to 5 V

Output Status when Conversion Stopped

07 04	03 00
16^1	16^0

00: CLR (0 or minimum value for each range output)
01: HOLD (Hold prior output value.)
02: MAX (Output maximum value of range.)

Mean Value Processing Setting

15 12	11 08	07 04	03 00
16^3	16^2	16^1	16^0

0000: Mean value processing with 2 buffers.
0001: No mean value processing
0002: Mean value processing with 4 buffers.
0003: Mean value processing with 8 buffers.
0004: Mean value processing with 16 buffers.
0005: Mean value processing with 32 buffers.
0006: Mean value processing with 64 buffers.

Conversion Time and Resolution Setting

15 12	11 08

00: Conversion time = 1 ms, resolution = 4,000
C1: Conversion time = 500 µs, resolution = 8,000

Operation Mode

07 04	03 00

00: Normal mode
C1: Adjustment mode

Voltage/Current Specifications (when 1 to 5 V/4 to 20 mA is selected)

This setting is valid for inputs and/or outputs only if "10" (1 to 5 V/4 to 20 mA) was specified in m+1.

15 08	07	06	05	04	03	02	01	00
	Input 4	Input 3	Input 2	Input 1			Out-put 2	Out-put 1

0: Voltage (1 to 5 V)
1: Current (4 to 20 mA)

Note m = 20000 + unit number x 100 is allocated as the DM number.

CJ1W-AD042

DM word	Setting contents															
	15	14	13	12	11	10	09	08	07	06	05	04	03	02	01	00
D2□□00	0				0				0							
D2□□01	0				0											
D2□□02	0				0											
D2□□03																
D2□□04																
D2□□05																
D2□□06	0				0											
D2□□07																
D2□□08																
D2□□09																
D2□□10	0				0											
D2□□11																
D2□□12																
D2□□13																
D2□□14	0				0											
D2□□15																
D2□□16																
D2□□17																

DM Area word (See note.)	Settings		
	15 08	07	00
m	---	---	Number of inputs used
m+1	---	Conversion mode setting	
m+2	---	Input 1 signal range	
m+3	Number of mean value buffers for input 1		
m+4	Input 1 scaling lower limit		
m+5	Input 1 scaling upper limit		
m+6	---	Input 2 signal range	
m+7	Number of mean value buffers for input 2		
m+8	Input 2 scaling lower limit		
m+9	Input 2 scaling upper limit		
m+10	---	Input 3 signal range	
m+11	Number of mean value buffers for input 3		
m+12	Input 3 scaling lower limit		
m+13	Input 3 scaling upper limit		
m+14	---	Input 4 signal range	
m+15	Number of mean value buffers for input 4		
m+16	Input 4 scaling lower limit		
m+17	Input 4 scaling upper limit		

Note: For the DM word addresses, m = D20000 + (unit number x 100)

Number of Analog Inputs Used

03 00
16^0

0: No inputs used.
1: One input used
2: Two inputs used
3: Three inputs used
4: Four inputs used

Conversion Mode Setting

07 04	03 00
16^1	16^0

00 hex: Cyclic Conversion Mode
A5 hex: Direct Conversion Mode

Input Signal Range Setting

07 04	03 00
16^1	16^0

0: –10 to 10 V
2: 0 to 10 V
3: 4 to 20 mA
6: –5 to 5 V
7: 1 to 5 V

Numbers of Mean Value Buffers

15 12	11 08	07 04	03 00
16^3	16^2	16^1	16^0

0: Mean value processing not used.
1: Mean value processing with 2 buffers
2: Mean value processing with 4 buffers
3: Mean value processing with 8 buffers
4: Mean value processing with 16 buffers
5: Mean value processing with 32 buffers
6: Mean value processing with 64 buffers
7: Mean value processing with 128 buffers
8: Mean value processing with 256 buffers
9: Mean value processing with 512 buffers

CJ1W-DA042V

DM word	Setting contents															
	15	14	13	12	11	10	09	08	07	06	05	04	03	02	01	00
D2□□00	0				0				0							
D2□□01	0				0											
D2□□02	0				0											
D2□□03																
D2□□04																
D2□□05																
D2□□06	0				0											
D2□□07																
D2□□08																
D2□□09																
D2□□10	0				0											
D2□□11																
D2□□12																
D2□□13																
D2□□14	0				0											
D2□□15																
D2□□16																
D2□□17																

DM Area word (See note.)	Settings		
	15 08	07 00	
m	---	---	Number of outputs used
m+1	---	Conversion mode setting	
m+2	---	Output 1 output signal range setting	
m+3	Output 1 output status when conversion stops		
m+4	Output 1 scaling lower limit		
m+5	Output 1 scaling upper limit		
m+6	---	Output 2 output signal range setting	
m+7	Output 2 output status when conversion stops		
m+8	Output 2 scaling lower limit		
m+9	Output 2 scaling upper limit		
m+10	---	Output 3 output signal range setting	
m+11	Output 3 output status when conversion stops		
m+12	Output 3 scaling lower limit		
m+13	Output 3 scaling upper limit		
m+14	---	Output 4 output signal range setting	
m+15	Output 4 output status when conversion stops		
m+16	Output 4 scaling lower limit		
m+17	Output 4 scaling upper limit		

Note: For the DM word addresses, m = D20000 + (unit number x 100)

Number of Analog Outputs Used

03 00
16^0

0: No outputs used.
1: One output used
2: Two outputs used
3: Three outputs used
4: Four outputs used

Conversion Mode Setting

07 04	03 00
16^1	16^0

00 hex: Cyclic Conversion Mode
A5 hex: Direct Conversion Mode

Output Signal Range Setting

07 04	03 00
16^1	16^0

1: 0 to 10 V
3: –10 to 10 V
6: 1 to 5 V

Output Status when Conversion Stops

15 12	11 08	07 04	03 00
16^3	16^2	16^1	16^0

0: CLR (Outputs 0 or minimum value of output range)
1: HOLD (Holds output value prior to stop.)
2: MAX (Outputs maximum value of output range)

Appendix D

Execution Times for Special Instructions for the CJ1W-AD042/-DA042V

Execution times for the ANALOG INPUT DIRECT CONVERSION (AIDC) instruction and ANALOG OUTPUT DIRECT CONVERSION (AODC) instruction are provided below.

Instruction	Mnemonic	Length (steps)	ON execution time (μs)						Conditions
			CJ2H		CJ2M		CJ3M		
			MIN value	MAX value	MIN value	MAX value	MIN value	MAX value	
ANALOG INPUT DIRECT CONVERSION	AIDC	3	25.2	30.5	27.4	31.7	27.4	31.7	Analog input number: 1, number of analog inputs used: 4
			26.9	32.1	29.1	33.5	29.1	33.5	Analog input number: 2, number of analog inputs used: 4
			32.9	38.3	35.1	39.8	35.1	39.8	Analog input number: 3, number of analog inputs used: 4
			34.5	39.8	36.8	41.9	36.8	41.9	Analog input number: 4, number of analog inputs used: 4
			28.9	34.5	31.2	35.8	31.2	35.8	Analog input number: 0, number of analog inputs used: 1
			30.8	36.4	33	38.1	33	38.1	Analog input number: 0, number of analog inputs used: 2
			37.2	43.3	39.5	44.5	39.5	44.5	Analog input number: 0, number of analog inputs used: 3
			39.4	45.5	41.5	46.6	41.5	46.6	Analog input number: 0, number of analog inputs used: 4
ANALOG OUTPUT DIRECT CONVERSION	AODC	3	23.1	28.9	25.4	29.7	25.4	29.7	Analog output number: 1, number of analog outputs used: 4
			23.1	28.9	25.4	29.6	25.4	29.6	Analog output number: 2, number of analog outputs used: 4
			23.1	28.9	25.3	29.7	25.3	29.7	Analog output number: 3, number of analog outputs used: 4
			23.1	28.9	25.4	29.7	25.4	29.7	Analog output number: 4, number of analog outputs used: 4
			26.6	32.6	28.9	33.3	28.9	33.3	Analog output number: 0, number of analog outputs used: 1
			32.3	38.2	34	39.1	34	39.1	Analog output number: 0, number of analog outputs used: 2
			38.2	43.7	40.3	45.3	40.3	45.3	Analog output number: 0, number of analog outputs used: 3
			44.1	50.0	45.8	50.6	45.8	50.6	Analog output number: 0, number of analog outputs used: 4

Index

A–B

A constant
  Analog I/O Unit, 328, 344, 396, 417
A/D conversion time
  Analog I/O Unit, 303, 370
adjustment mode
  allocations
    Analog I/O Unit, 331, 399
    Analog Input Unit, 54, 107
    Analog Output Unit, 196, 243
  operational flow
    Analog I/O Unit, 346, 419
    Analog Input Unit, 64, 116
    Analog Output Unit, 201, 252
Alarm Flags
  Analog I/O Unit, 330, 332, 363, 398, 399, 436
  Analog Input Unit, 53, 55, 107, 108, 156
  Analog Output Unit, 196, 197, 213, 243, 244, 265, 288
alarms
  Analog I/O Unit, 361, 434
  Analog Input Unit, 73, 124, 166
  Analog Output Unit, 211, 263, 296
  upper and lower limit, 446
B constant
  Analog I/O Unit, 328, 344, 396, 417
bias
  Analog I/O Unit, 344, 417

C

circuitry
  input
    Analog I/O Unit, 321, 387
    Analog Input Unit, 37, 98, 145
  internal
    Analog I/O Unit, 321, 387
    Analog Input Unit, 37, 98, 145
    Analog Output Unit, 188, 234, 280
  output
    Analog I/O Unit, 321, 387
    Analog Output Unit, 188, 234, 280
Clear Bit
  Analog I/O Unit, 331, 347, 353, 399, 420, 426
  Analog Input Unit, 55, 67, 108, 118
  Analog Output Unit, 197, 203, 244, 255
components
  Analog I/O Unit, 317, 384
  Analog Input Unit, 31, 93, 142
  Analog Output Unit, 184, 230
configuration
  internal
    Analog I/O Unit, 321, 388
    Analog Input Unit, 38, 98, 145
    Analog Output Unit, 188, 234, 281
conversion
  signed binary to signed BCD, 450
  stopping and starting
    Analog I/O Unit, 340, 411
    Analog Output Unit, 199, 247, 290
  time
    Analog I/O Unit, 303, 370
  values
    Analog I/O Unit, 332, 339, 400, 409
    Analog Input Unit, 56, 108, 157
    Analog Output Unit, 197, 245, 289
Conversion Enable Bit
  Analog I/O Unit, 340, 411
  Analog Output Unit, 199, 247, 290
conversion time
  Analog Input Units
    setting, 29, 47, 48, 58, 91, 104, 110, 227, 247, 402, 411
cyclic conversion
  Analog Input Unit, 158
  Analog Output Unit, 291

D

D/A conversion time
  Analog I/O Unit, 303
data exchange
  Analog I/O Unit, 302, 324, 370, 391
  Analog Input Unit, 18, 42, 82, 101, 132, 149
  Analog Output Unit, 174, 175, 190, 218, 236, 270, 283
data memory coding sheets, 455
dimensions, 441
  Analog I/O Unit, 302, 370
  Analog Input Unit, 82, 132
  Analog Output Unit, 174, 218, 270
direct conversion, 7
  Analog Input Unit, 158
  Analog Output Unit, 291
disconnection
  voltage input
    Analog I/O Unit, 322, 389
    Analog Input Unit, 38, 99, 146
Disconnection Detection Flag, 445

Analog I/O Unit, 315, 382
Analog Input Unit, 30, 92, 141
DM allocations
contents
Analog I/O Unit, 327, 395
Analog Input Unit, 47, 104, 152
Analog Output Unit, 193, 238, 285
Down Bit
Analog I/O Unit, 331, 353, 399, 426
Analog Input Unit, 55, 108
Analog Output Unit, 197, 203, 244, 255

E

EC Directives, xxi
errors
Analog I/O Unit, 361, 434
Analog Input Unit, 73, 124, 166
Analog Output Unit, 211, 263, 296
CPU Unit, 77, 128, 169, 214, 267, 299, 365, 438
UNIT No. DPL ERR
Analog I/O Unit, 326, 394
Analog Input Unit, 46, 103
Analog Output Unit, 192, 238
external terminals
Analog I/O Unit, 302, 370
Analog Input Unit, 82, 132
Analog Output Unit, 174, 218, 270

F

fixed data
allocations
Analog I/O Unit, 326, 394
Analog Input Unit, 45, 103
Analog Output Unit, 192, 238
Analog I/O Unit, 324, 391
Analog Input Unit, 42, 101
Analog Output Unit, 190, 236
set values
Analog I/O Unit, 328, 396
Analog Input Unit, 49, 105
Analog Output Unit, 193, 240
stored values
Analog I/O Unit, 328, 396
Analog Input Unit, 49, 105
Analog Output Unit, 193, 240
functions, 2
applications, 16
input
Analog I/O Unit, 303
other
Analog I/O Unit, 303
output
Analog I/O Unit, 303

G–H

gain adjustment function, 6
Analog I/O Unit, 345, 350, 356, 418, 423, 429
Analog Input Unit, 64, 70, 116, 121
Analog Output Unit, 201, 207, 252, 259
applications, 16
clearing adjusted values
Analog I/O Unit, 352, 359, 425, 432
Analog Input Unit, 72, 123
Analog Output Unit, 210, 262
setting procedure
Analog I/O Unit, 310, 377
Analog Input Unit, 24, 87
Analog Output Unit, 179, 223, 224
Gain Bit
Analog I/O Unit, 331, 347, 353, 399, 420, 426
Analog Input Unit, 55, 67, 108, 118
Analog Output Unit, 197, 203, 244, 255
gradient conversion
negative
Analog I/O Unit, 343, 416
positive
Analog I/O Unit, 343, 416
history buffers
Analog I/O Unit, 334, 402
Analog Input Unit, 59, 111, 160

I–L

I/O refresh data
allocations
Analog I/O Unit, 329, 397
Analog Input Unit, 50, 105, 154
Analog Output Unit, 194, 241, 287
Analog I/O Unit, 324, 391
Analog Input Unit, 42, 101, 149
Analog Output Unit, 190, 236, 283
set values
Analog I/O Unit, 330, 398
Analog Input Unit, 53, 107, 156
Analog Output Unit, 196, 243, 288
stored values
Analog I/O Unit, 330, 398

Analog Input Unit, 53, 107, 156
Analog Output Unit, 196, 243, 288
I/O tables
creation
Analog I/O Unit, 313, 379
Analog Input Unit, 27, 89, 138
Analog Output Unit, 181, 226, 275
indicators
Analog I/O Unit, 318, 385
Analog Input Unit, 32, 94, 143
Analog Output Unit, 185, 231, 279
errors
Analog I/O Unit, 361, 434
Analog Input Unit, 73, 124, 166
Analog Output Unit, 211, 263, 296
initial data
settings
Analog I/O Unit, 313, 379
Analog Input Unit, 28, 90, 139
Analog Output Unit, 181, 226, 276
input
circuitry
Analog I/O Unit, 321, 387
Analog Input Unit, 37, 98, 145
impedance
Analog I/O Unit, 303, 370
Analog Input Unit, 18, 82, 132
numbers
Analog I/O Unit, 332, 347, 400, 420
Analog Input Unit, 56, 66, 108, 118
settings
Analog I/O Unit, 332, 400
Analog Input Unit, 56, 108, 157
signal range, 2, 3
Analog I/O Unit, 303, 328, 333, 370, 371, 396, 400
Analog Input Unit, 18, 49, 56, 82, 105, 109, 132, 153, 157
specifications
Analog I/O Unit, 303, 305, 373
Analog Input Unit, 21, 84, 134
input disconnection detection function, 5
Analog I/O Unit, 338, 408
Analog Input Unit, 63, 115, 165
applications, 16
input functions
block diagram
Analog I/O Unit, 305, 372
Analog Input Unit, 21, 84, 134
installation
procedure
Analog I/O Unit, 310, 377
Analog Input Unit, 24, 87, 137
Analog Output Unit, 178, 222, 274
isolation
Analog I/O Unit, 302, 370
Analog Input Unit, 18, 82, 132
Analog Output Unit, 174, 218, 270
ladder programs
Analog I/O Unit, 314, 381
Analog Input Unit, 29, 91, 140
Analog Output Unit, 182, 228, 277
limit, 453
loops
Analog I/O Unit, 344, 417

M–N

maximum Units
per Rack
Analog I/O Unit, 302, 370
Analog Input Unit, 18, 82, 132
Analog Output Unit, 174, 218, 270
per system
Analog I/O Unit, 302
mean value function, 6
applications, 16
settings
Analog I/O Unit, 328, 396
Analog Input Unit, 49, 105, 153
mean value processing, 452
Analog I/O Unit, 334, 402
Analog Input Unit, 59, 111, 160
mounting
position
Analog I/O Unit, 302, 370
Analog Input Unit, 18, 82, 132
Analog Output Unit, 174, 218, 270
precautions
Analog I/O Unit, 346, 419
Analog Input Unit, 65, 117
Analog Output Unit, 202, 253, 254
restrictions, 12
normal mode
allocations
Analog I/O Unit, 330, 398
Analog Output Unit, 195, 241
number of analog inputs used, 157
number of analog outputs used, 289

O

offset adjustment function, 6
  Analog I/O Unit, 345, 348, 353, 418, 421, 426
  Analog Input Unit, 64, 67, 116, 119
  Analog Output Unit, 201, 204, 252, 256
  applications, 16
  clearing adjusted values
    Analog I/O Unit, 352, 359, 425, 432
    Analog Input Unit, 72, 123
    Analog Output Unit, 210, 262
  setting procedure
    Analog I/O Unit, 310, 377
    Analog Input Unit, 24, 87
    Analog Output Unit, 179, 223, 224
Offset Bit
  Analog I/O Unit, 331, 347, 353, 399, 420, 426
  Analog Input Unit, 55, 67, 108, 118
  Analog Output Unit, 197, 203, 244, 255
operating procedure
  Analog I/O Unit, 310, 377
  Analog Input Unit, 24, 87, 137
  Analog Output Unit, 179, 223, 224
operation mode switch
  Analog I/O Unit, 319
  Analog Input Unit, 34, 95
  Analog Output Unit, 186, 232
output
  circuitry
    Analog I/O Unit, 321, 387
    Analog Output Unit, 188, 234, 280
  current
    Analog I/O Unit, 303, 371
    Analog Output Unit, 174, 218
  data
    Analog I/O Unit, 303, 370, 371
    Analog Input Unit, 82
  impedance
    Analog I/O Unit, 303, 371
    Analog Output Unit, 174, 218, 270
  numbers
    Analog I/O Unit, 339, 353, 409, 426
    Analog Output Unit, 197, 203, 245, 255
  setting errors
    Analog I/O Unit, 342, 415
    Analog Output Unit, 201, 251, 295
  settings
    Analog I/O Unit, 339, 409
    Analog Output Unit, 197, 245, 289
  signal range, 2, 3
    Analog I/O Unit, 303, 328, 339, 341, 396, 410, 412
    Analog Output Unit, 174, 193, 198, 200, 218, 240, 245, 248, 270, 286, 289
  specifications
    Analog I/O Unit, 303, 307, 375
    Analog Output Unit, 176, 220
  status, 193, 240
    Analog I/O Unit, 328, 341, 396, 412
    Analog Output Unit, 200, 248
output functions
  block diagram
    Analog I/O Unit, 305, 372
    Analog Output Unit, 176, 220, 271
output hold function, 5
  Analog I/O Unit, 341, 412
  Analog Output Unit, 200, 248, 292
  applications, 16

P

Peak Value Hold Bit
  Analog I/O Unit, 337, 406
  Analog Input Unit, 63, 114
peak value hold function, 5
  Analog I/O Unit, 337, 405
  Analog Input Unit, 62, 114, 164
  applications, 16
power consumption
  Analog I/O Unit, 302, 370
  Analog Input Unit, 18, 82, 132
  Analog Output Unit, 174, 218, 270
Power Supply Units, 12, 13, 19, 83
precautions, 15
  application, xx
  general, xviii
  mounting
    Analog I/O Unit, 346, 419
    Analog Input Unit, 65, 117
    Analog Output Unit, 202, 253, 254
  operating environment, xix
  safety, xviii
Programming Console
  errors
    Analog I/O Unit, 326, 329, 394, 397
    Analog Input Unit, 46, 51, 103, 106
    Analog Output Unit, 192, 194, 238, 241
Programming Devices
  Analog I/O Unit, 332, 400
  Analog Input Unit, 56, 108
  Analog Output Unit, 197, 245

R

rated input
  Analog I/O Unit, 303, 370
  Analog Input Unit, 18, 82, 132
ratio conversion function
  Analog I/O Unit, 342, 415
  applications, 16
ratio set value
  Analog I/O Unit, 344, 417
resolution
  Analog Input Units
    setting, 29, 47, 48, 58, 91, 104, 110, 227, 247, 402, 411
  input
    Analog I/O Unit, 303, 370, 371
    Analog Input Unit, 18, 82, 132
  output
    Analog I/O Unit, 303
    Analog Output Unit, 174, 218, 270

S–T

safety precautions, xviii
scaling, 448
Set Bit
  Analog I/O Unit, 331, 347, 353, 399, 420, 426
  Analog Input Unit, 55, 67, 108, 118
  Analog Output Unit, 197, 203, 244, 255
set data
  Analog I/O Unit, 303
  Analog Output Unit, 174, 218, 270
settings
  procedure
    Analog I/O Unit, 310, 377
    Analog Input Unit, 24, 87, 137
    Analog Output Unit, 178, 222
Special I/O Unit Area
  Analog I/O Unit, 302, 370
  Analog Input Unit, 132
  Analog Output Unit, 174, 175, 218, 270
Special I/O Unit DM Area
  Analog I/O Unit, 302, 326, 370, 394
  Analog Input Unit, 45, 103, 132, 151
  Analog Output Unit, 174, 175, 192, 218, 238, 270, 285
Special I/O Unit Restart Bits
  Analog I/O Unit, 325, 334, 366, 393, 403, 439
  Analog Input Unit, 44, 60, 78, 102, 129, 150, 170
  Analog Output Unit, 191, 215, 237, 268, 284, 300
specifications
  Analog I/O Unit, 302, 371
  Analog Input Unit, 18, 82, 132
  Analog Output Unit, 174, 218, 270
  general
    Analog I/O Unit, 302, 370
    Analog Input Unit, 18, 82, 132
    Analog Output Unit, 174, 218, 270
  input
    Analog I/O Unit, 303, 305, 373
    Analog Input Unit, 21, 84, 134
  output
    Analog I/O Unit, 303, 307, 375
    Analog Output Unit, 176, 220
square root calculation, 451
switch settings
  Analog I/O Unit, 317, 384
  Analog Input Unit, 31, 93, 142
  Analog Output Unit, 184, 230, 278
system configuration, 11
terminal arrangement
  Analog I/O Unit, 320, 387
  Analog Input Unit, 36, 97, 144
  Analog Output Unit, 187, 232, 280

U

UNIT No. DPL ERR
  Analog I/O Unit, 326, 329, 394, 397
  Analog Input Unit, 46, 51, 103, 106
  Analog Output Unit, 192, 194, 238, 241
unit number
  settings
    Analog I/O Unit, 325, 392
    Analog Input Unit, 43, 102, 150
    Analog Output Unit, 191, 237, 284
unit number switches
  Analog I/O Unit, 319, 385
  Analog Input Unit, 33, 94, 143
  Analog Output Unit, 186, 231, 279
Up Bit
  Analog I/O Unit, 331, 353, 399, 426
  Analog Input Unit, 55, 108
  Analog Output Unit, 197, 203, 244, 255

V

voltage input disconnection
  Analog I/O Unit, 322, 389
  Analog Input Unit, 38, 99, 146

voltage/current switch
Analog I/O Unit, 320, 386
Analog Input Unit, 35, 96

W

weight
Analog I/O Unit, 302, 370
Analog Input Unit, 18, 82, 132
Analog Output Unit, 174, 218, 270
wiring
Analog I/O Unit, 320, 387
Analog Input Unit, 36, 97, 144
Analog Output Unit, 187, 232, 280
considerations
Analog I/O Unit, 324, 391
Analog Input Unit, 42, 100, 148
Analog Output Unit, 190, 235, 282
examples
Analog I/O Unit, 323, 390
Analog Input Unit, 39, 100, 146
Analog Output Unit, 189, 235, 281

Revision History

A manual revision code appears as a suffix to the catalog number on the front cover of the manual.

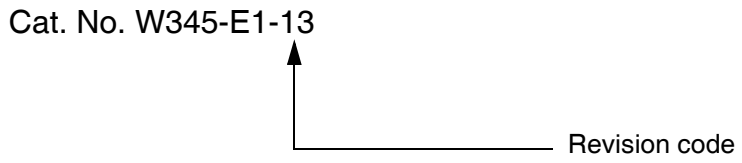

The following table outlines the changes made to the manual during each revision. Page numbers refer to the previous version.

Revision code	Date	Revised content
01	March 1999	Original production
02	August 1999	Revised to include information on CS1W-AD041/081, CS1W-DA041/08V/08C.
03	May 2001	Revised to add CJ1W-AD081 and CJ1W-DA041 Analog I/O Units and one new section added on each. “CS1” changed to “CS (-series)” or “CS/CJ (-series)” accordingly. Other changes are as follows: **Page xiv:** Precautions added. **Pages 11 and 57:** Note added.
04	November 2001	Revised to include information on CS1W-AD041-V1, CS1W-AD081-V1, CJ1W-AD041-V1, CJ1W-AD081-V1, CJ1W-DA021.
05	November 2002	Revised to include information on CJ1W-DA08V and CJ1W-MAD42. Changes include changes and additions to the following items. Conversion time/resolution settings and operation mode settings Voltage and current range settings Scaling function Offset and gain adjustment
06	July 2003	Revised to include information on the CJ1W-DA08C, including the following changes. **Page 8**: “CS1W-DA8C” corrected to “CS1W-DA08C” in table heading. **Pages 104, 253, and 324:** Note corrected at the bottom of each page regarding the ON/OFF status of the Offset Bit and Gain Bit and the conversion data. **Pages 53, 55, 102, 255, and 326:** Note added at the bottom of each page regarding the ON/OFF status of the Offset Bit and Gain Bit and the conversion data.
07	December 2004	Revised to include information on the CS1W-AD161, and remove certain information on the CS1W-AD041, CS1W-AD081, and CJ1W-AD081.
08	July 2005	**Page xii:** Information on liability and warranty added. **Pages xvii and xviii:** Common Emission Standard EN50081-2 changed to EN61000-6-4.
09	September 2006	**Page xxi**: Information on EC Directives replaced. **Page 34:** Wiring diagram corrected. **Page 38:** Note added at bottom of page. **Pages 49 and 195:** Left column removed from bottom table. **Pages 70, 120, 163, 215, 281, and 352:** Flowchart expanded. **Page 103:** Left column removed from top table. **Page 145:** Information added to note 1. **Page 148:** Value of bits 4 to 7 of word n corrected.
10	March 2008	**Page xi:** Updated related manual table. **Page xviii:** Added warning to the general precautions. **Page 96:** Corrected wiring diagram and added asterisks.
11	August 2009	Added CJ1W-AD042 Analog Input Unit and CJ1W-DA042V Analog Output Unit

Revision code	Date	Revised content
12	October 2010	Added information on operating mode switch, changed figures, added setting procedures for scheduled interrupt tasks, and added basic procedures for analog-to-digital and digital-to-analog conversion.
13	October 2026	Changes were made throughout the manual to include information for new products (CJ3 CPU Unit).

OMRON Corporation **Industrial Automation Company**

Kyoto, JAPAN **Contact : www.ia.omron.com**

Regional Headquarters

OMRON EUROPE B.V.
Wegalaan 67-69, 2132 JD Hoofddorp
The Netherlands
Tel: (31) 2356-81-300 Fax: (31) 2356-81-388

OMRON ELECTRONICS LLC
2895 Greenspoint Parkway, Suite 200
Hoffman Estates, IL 60169 U.S.A.
Tel: (1) 847-843-7900 Fax: (1) 847-843-7787

OMRON ASIA PACIFIC PTE. LTD.
438B Alexandra Road, #08-01/02 Alexandra
Technopark, Singapore 119968
Tel: (65) 6835-3011 Fax: (65) 6835-3011

OMRON (CHINA) CO., LTD.
Room 2211, Bank of China Tower,
200 Yin Cheng Zhong Road,
PuDong New Area, Shanghai, 200120, China
Tel: (86) 21-6023-0333 Fax: (86) 21-5037-2388

Authorized Distributor:

©OMRON Corporation 1999 - 2026 All Rights Reserved.
In the interest of product improvement,
specifications are subject to change without notice.

Cat. No. W345-E1-13 1026